THIS DRAWING IS UNPUBLISHED. RELEASED FOR PUBLICATION 20
© COPYRIGHT 20 BY - ALL RIGHTS RESERVED.

LOC	DIST
-	-

REVISIONS

P	LTR	DESCRIPTION	DATE	DWN	APVD
	A	RELEASE PER RTS 793000	13MAY2013	SW	JN/JM

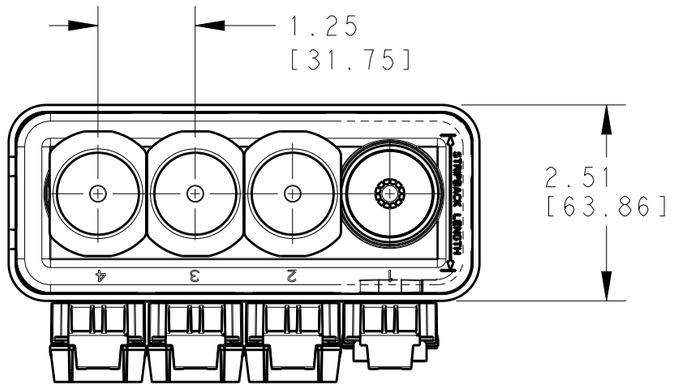

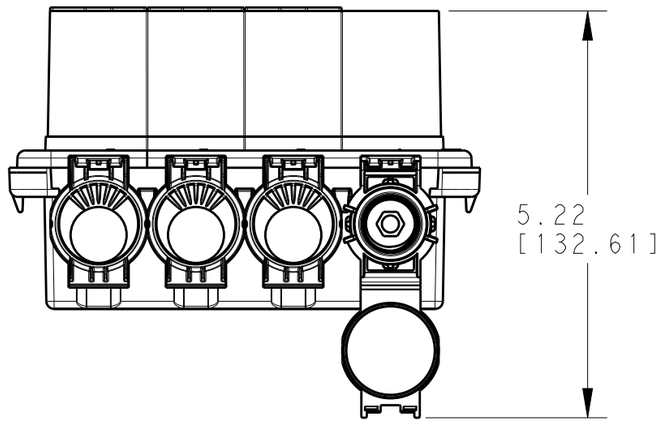

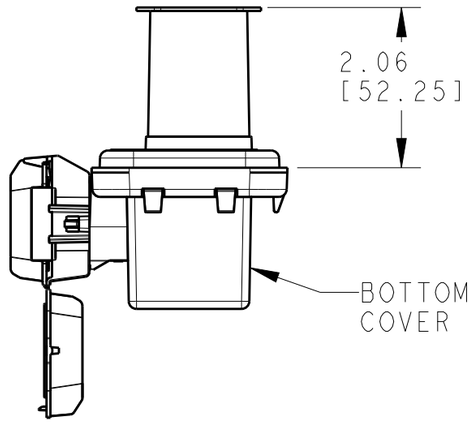

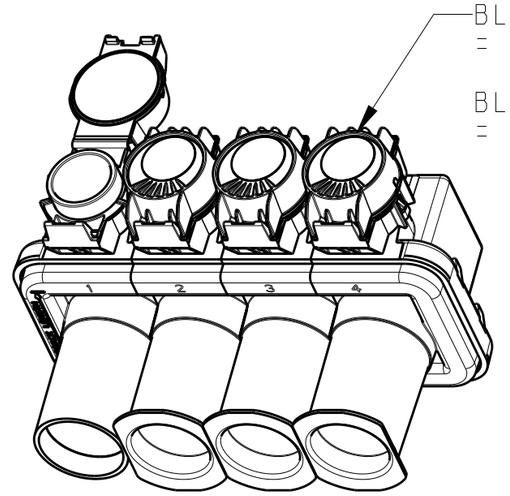

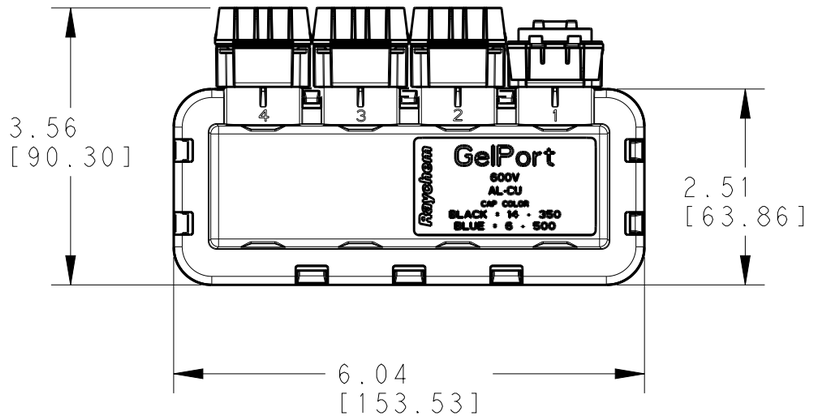

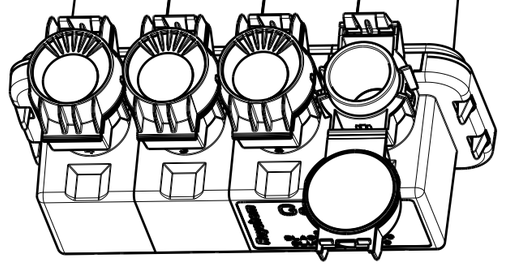

RAYCHEM P/N	DESCRIPTION	BOTTOM COVER	NO. of PORTS
E80847-000	GPRT-350-4P(B6)	BLACK	4 (350 mcm)
CA1257-000	GPRT-350-4P-C(B6)	CLEAR (C)	4 (350 mcm)
CS7069-000	GPRT-350-4P-C-ES(B6)	CLEAR/EXTRA PLATE (ES)	4 (350 mcm)

THIS DRAWING IS A CONTROLLED DOCUMENT.

DIMENSIONS: INCHES[mm]

TOLERANCES UNLESS OTHERWISE SPECIFIED:
0 PLC ±-
1 PLC ±
2 PLC ±
3 PLC ±
4 PLC ±
ANGLES ±-

MATERIAL -
FINISH -

DWN YASHKUMAR 18APR2013
CHK J. NEWMAN 18APR2013
APVD G. PULLIUM 18APR2013
PRODUCT SPEC -
APPLICATION SPEC -
WEIGHT -

TE Connectivity

NAME
GELPORT
4 PORT
-

SIZE	CAGE CODE	DRAWING NO	RESTRICTED TO
A3	00779	C-SCD-N918	-

Customer Drawing | SCALE 1:2 | SHEET 1 OF 1 | REV A

1470-19 (3/11)

Downloaded from Arrow.com.