MICRO SWITCH
FREEPORT ILLINOIS U S A
A DIVISION OF HONEYWELL
FED. MFG. CODE 81929

SWITCH-TOGGLE (MAGNETIC HOLD-IN)

CATALOG LISTING
25ET17-2-F

THIS DRAWING COVERS A PROPRIETARY ITEM AND IS THE PROPERTY OF MICRO SWITCH A DIVISION OF HONEYWELL. THIS DRAWING IS NOT TO BE COPIED OR USED WITHOUT THE APPROVAL OF MICRO SWITCH.

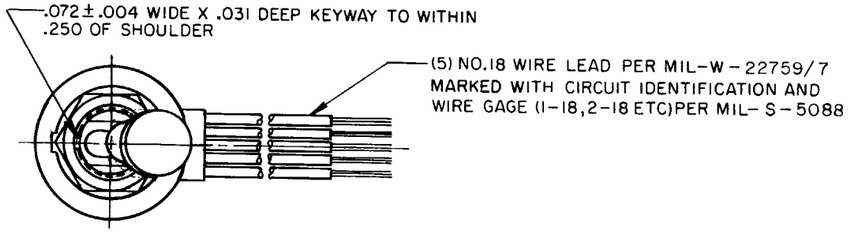

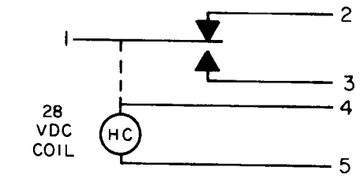

CIRCUIT DIAGRAM
(MECHANICALLY MAINTAINED POSITION)

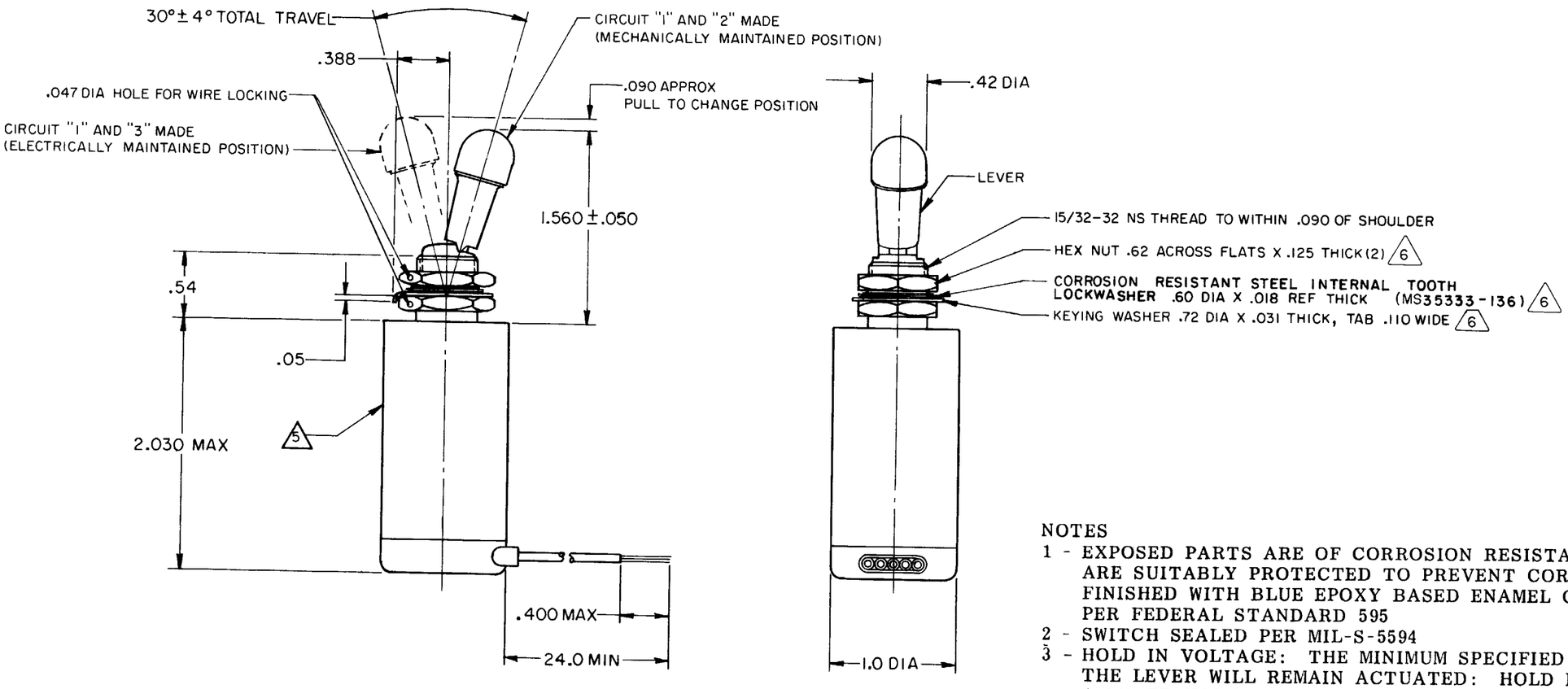

NOTES
1 - EXPOSED PARTS ARE OF CORROSION RESISTANT MATERIAL OR ARE SUITABLY PROTECTED TO PREVENT CORROSION. ENCLOSURE FINISHED WITH BLUE EPOXY BASED ENAMEL COLOR NO. 25184 PER FEDERAL STANDARD 595
2 - SWITCH SEALED PER MIL-S-5594
3 - HOLD IN VOLTAGE: THE MINIMUM SPECIFIED VOLTAGE AT WHICH THE LEVER WILL REMAIN ACTUATED: HOLD IN MAY OCCUR AT A LOWER VALUE. DROP OUT VOLTAGE THE VOLTAGE RANGE IN WHICH THE LEVER WILL BE RELEASED
4 - CIRCUITS CAN BE TRANSFERRED MANUALLY. ENERGIZING THE COIL WILL NOT CAUSE TRANSFER OF CIRCUITS
5 CIRCUIT IDENTIFICATION IS SHOWN ON SWITCH
6 HARDWARE MAY BE FURNISHED UNASSEMBLED PER MIL-S-5594

CHARACTERISTICS

SOLENOID RATING AT 20°C

STEADY STATE LIMITS - - - - 20 - 29 VDC
HOLD IN - - - - - - - - - - - - 10 VDC
DROP OUT - - - - - - - - - - 0 - 10 VDC
COIL RESISTANCE - - - - 220 OHM MIN
OPERATING FORCE - - - - - - - 7 LBS MAX
OVERRIDE FORCE AT 29 VDC - - 10 LBS MAX

ELECTRICAL DATA

CONTACT ARRANGEMENT
S P D T

VOLTAGE	RATINGS IN AMPERES			
	SEA LEVEL			
		RES	IND	MOTOR
28 VOLTS DC		4	3	4

SCALE FULL
DO NOT SCALE PRINT

UNLESS OTHERWISE NOTED
DIMENSIONS ARE IN INCHES
TOLERANCES ARE:

ONE PLACE	(.0)	±.030
TWO PLACE	(.00)	±.015
THREE PLACE	(.000)	±.005
ANGLES		±

WEIGHT 8.3 OZ MAX

M 25ET17-2-F

DRAWING NUMBER 8 7

ISSUE X 8 X 8 8

REPLACES

RELEASE NO. PR-4852

CHECK

REVISIONS

A	CO15472	K F K 19 MAY 75
B	CO15952	R E R 8 MAR 76
C	CO 5052	WJI 24 SEP 81
D	CO 58300	S L B 3 NOV 82
E	CO 5402	K EV 16 APR 84
F	CO 5800	T SK 31 AUG 84

CHECK 21 MAR 75

CHECK D W

DRAWN R E R 13 MAR 75

FO-52851

Downloaded from Arrow.com.