# Power Switch for Half-Bridge Resonant Converters

# FSFR-XS Series

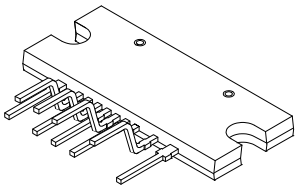

SIP9 26x10.5
CASE 127EM

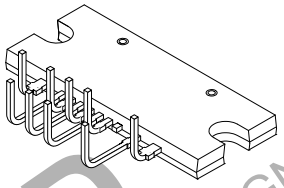

SIP9 26x10.5
CASE 127EN

DISCONTINUED
THIS DEVICE IS NOT RECOMMENDED FOR NEW DESIGN
PLEASE CONTACT YOUR onsemi
REPRESENTATIVE FOR INFORMATION

## Description

The FSFR−XS series includes highly integrated power switches designed for high−efficiency half−bridge resonant converters. Offering everything necessary to build a reliable and robust resonant converter, the FSFR−XS series simplifies designs while improving productivity and performance. The FSFR−XS series combines power MOSFETs with fast−recovery type body diodes, a high−side gate−drive circuit, an accurate current controlled oscillator, frequency limit circuit, soft−start, and built−in protection functions. The high−side gate−drive circuit has common−mode noise cancellation capability, which guarantees stable operation with excellent noise immunity. The fast−recovery body diode of the MOSFETs improves reliability against abnormal operation conditions, while minimizing the effect of reverse recovery. Using the zero−voltage−switching (ZVS) technique dramatically reduces the switching losses and significantly improves efficiency. The ZVS also reduces the switching noise noticeably, which allows a small−sized Electromagnetic Interference (EMI) filter.

The FSFR−XS series can be applied to resonant converter topologies such as series resonant, parallel resonant, and LLC resonant converters.

## Features

- Variable Frequency Control with 50% Duty Cycle for Half−Bridge Resonant Converter Topology
- High Efficiency through Zero Voltage Switching (ZVS)
- Internal UniFET™ with Fast−Recovery Body Diode
- Fixed Dead Time (350 ns) Optimized for MOSFETs
- Up to 300 kHz Operating Frequency
- Auto−Restart Operation for All Protections with External $LV_{CC}$
- Protection Functions: Over−Voltage Protection (OVP), Over−Current Protection (OCP), Abnormal Over−Current Protection (AOCP), Internal Thermal Shutdown (TSD)

## Applications

- PDP and LCD TVs
- Desktop PCs and Servers
- Adapters
- Telecom Power Supplies

## Related Resources

*AN−4151* − Half−Bridge LLC Resonant Converter Design Using FSFR−Series Power Switch

## MARKING DIAGRAM




| | |
|---|---|
| $Y | = **onsemi** Logo |
| &Z | = Assembly Plant Code |
| &3 | = 3−Digit Date Code |
| &K | = 2−Digits Lot Run Traceability Code |
| XXXXXXXXXX | = Device Code |

## ORDERING INFORMATION

See detailed ordering and shipping information on page 2 of this data sheet.

© Semiconductor Components Industries, LLC, 2010


Downloaded from Arrow.com.

## ORDERING INFORMATION

| Part Number | Package | Operating Junction Temperature | $R_{DS(ON_MAX)}$ | Maximum Output Power without Heatsink ($V_{IN}$ = 350~400 V) (Note 1, 2) | Maximum Output Power with Heatsink ($V_{IN}$ = 350~400 V) (Note 1, 2) |
|---|---|---|---|---|---|
| FSFR2100XS | 9−SIP | −40 to +130°C | 0.51 Ω | 180 W | 400 W |
| FSFR1800XS | | | 0.95 Ω | 120 W | 260 W |
| FSFR1700XS | | | 1.25 Ω | 100 W | 200 W |
| FSFR1600XS | | | 1.55 Ω | 80 W | 160 W |
| FSFR2100XSL | 9−SIP L−Forming | | 0.51 Ω | 180 W | 400 W |
| FSFR1800XSL | | | 0.95 Ω | 120 W | 260 W |
| FSFR1700XSL | | | 1.25 Ω | 100 W | 200 W |
| FSFR1600XSL | | | 1.55 Ω | 80 W | 160 W |

1. The junction temperature can limit the maximum output power.
2. Maximum practical continuous power in an open−frame design at 50°C ambient.

DISCONTINUED
THIS DEVICE IS NOT RECOMMENDED FOR NEW DESIGN
PLEASE CONTACT YOUR onsemi
REPRESENTATIVE FOR INFORMATION

## APPLICATION CIRCUIT DIAGRAM

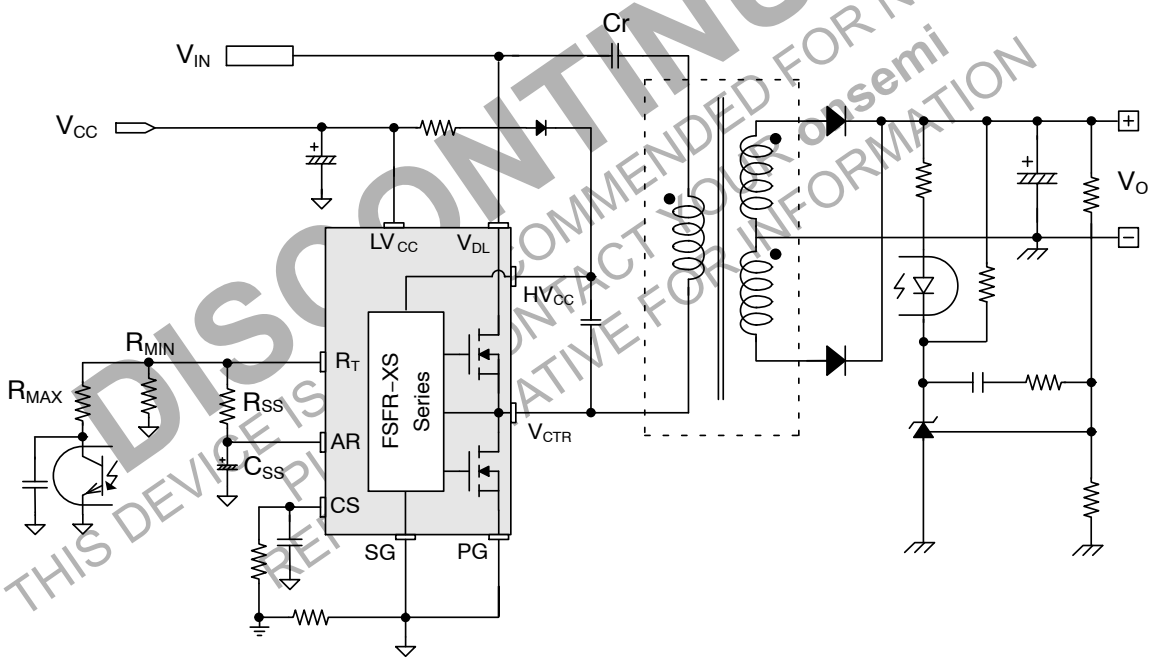


**Figure 1. Typical Application Circuit (LLC Resonant Half−Bridge Converter)**



Downloaded from Arrow.com.

## BLOCK DIAGRAM

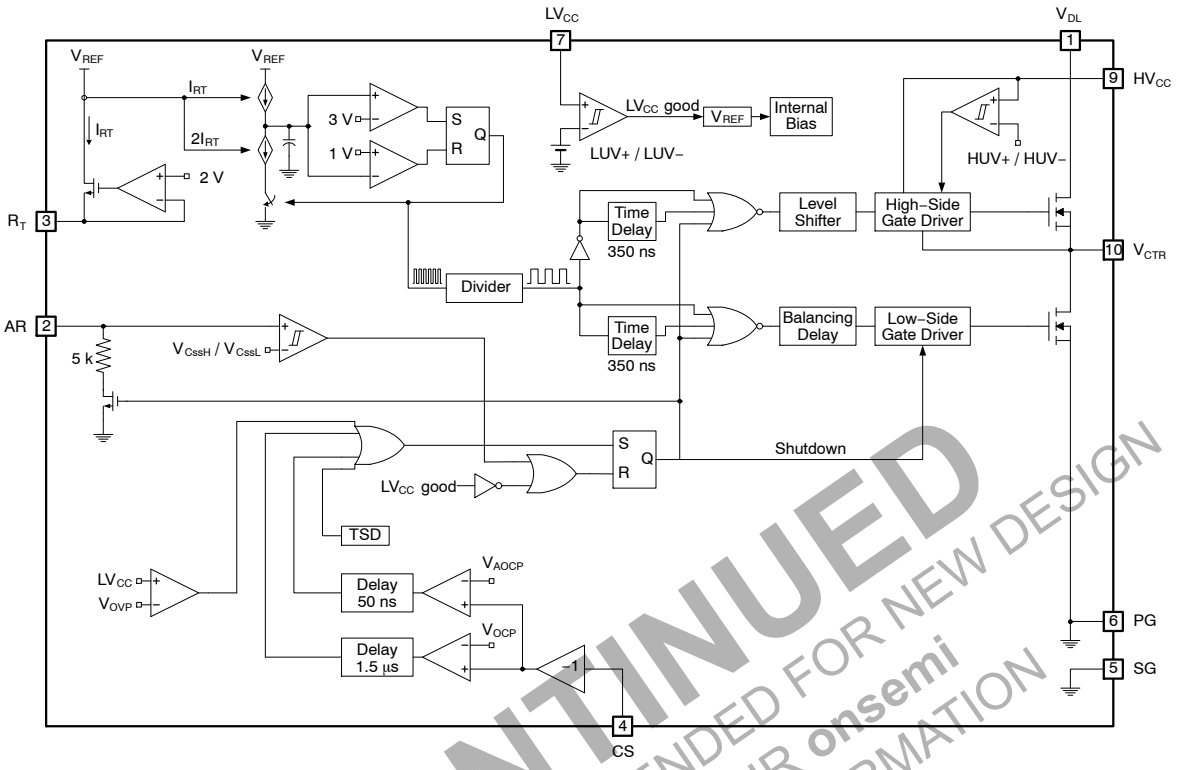


**Figure 2. Internal Block Diagram**

DISCONTINUED
THIS DEVICE IS NOT RECOMMENDED FOR NEW DESIGN
PLEASE CONTACT YOUR onsemi
REPRESENTATIVE FOR INFORMATION



Downloaded from Arrow.com.

## PIN CONFIGURATION

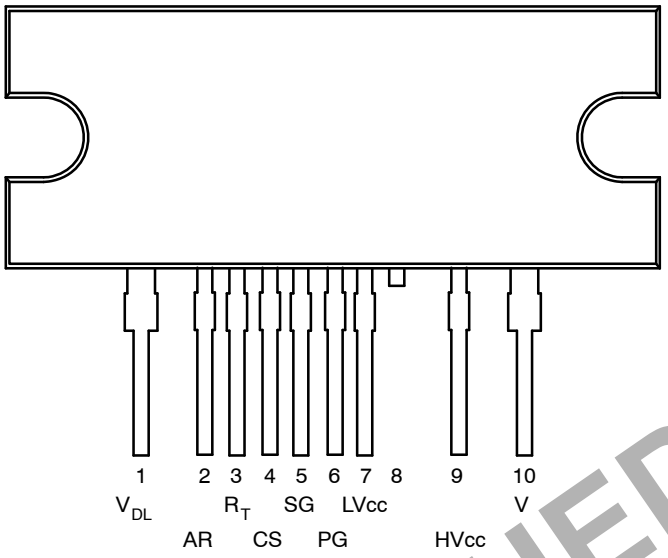


**Figure 3. Package Diagram**

DISCONTINUED
THIS DEVICE IS NOT RECOMMENDED FOR NEW DESIGN
PLEASE CONTACT YOUR onsemi
REPRESENTATIVE FOR INFORMATION

### PIN DESCRIPTION

| Pin # | Name | Description |
|---|---|---|
| 1 | $V_{DL}$ | This is the drain of the high−side MOSFET, typically connected to the input DC link voltage. |
| 2 | AR | This pin is for discharging the external soft−start capacitor when any protections are triggered. When the voltage of this pin drops to 0.2 V, all protections are reset and the controller starts to operate again. |
| 3 | $R_T$ | This pin programs the switching frequency. Typically, an opto−coupler is connected to control the switching frequency for the output voltage regulation. |
| 4 | CS | This pin senses the current flowing through the low−side MOSFET. Typically, negative voltage is applied on this pin. |
| 5 | SG | This pin is the control ground. |
| 6 | PG | This pin is the power ground. This pin is connected to the source of the low−side MOSFET. |
| 7 | $LV_{CC}$ | This pin is the supply voltage of the control IC. |
| 8 | NC | No connection. |
| 9 | $HV_{CC}$ | This is the supply voltage of the high−side gate−drive circuit IC. |
| 10 | $V_{CTR}$ | This is the drain of the low−side MOSFET. Typically, a transformer is connected to this pin. |



Downloaded from Arrow.com.

**ABSOLUTE MAXIMUM RATINGS** ($T_A$ = 25°C unless otherwise specified)

| Symbol | Parameter | | Min | Max | Unit |
|---|---|---|---|---|---|
| $V_{DS}$ | Maximum Drain−to−Source Voltage ($V_{DL}$−$V_{CTR}$ and $V_{CTR}$−PG) | | 500 | − | V |
| $LV_{CC}$ | Low−Side Supply Voltage | | −0.3 | 25.0 | V |
| $HV_{CC}$ to $V_{CTR}$ | High−Side $V_{CC}$ Pin to Low−Side Drain Voltage | | −0.3 | 25.0 | V |
| $HV_{CC}$ | High−Side Floating Supply Voltage | | −0.3 | 525.0 | V |
| $V_{AR}$ | Auto−Restart Pin Input Voltage | | −0.3 | $LV_{CC}$ | V |
| $V_{CS}$ | Current−Sense (CS) Pin Input Voltage | | −5.0 | 1.0 | V |
| $V_{RT}$ | $R_T$ Pin Input Voltage | | −0.3 | 5.0 | V |
| $dV_{CTR}/dt$ | Allowable Low−Side MOSFET Drain Voltage Slew Rate | | − | 50 | V/ns |
| $P_D$ | Total Power Dissipation (Note 3) | FSFR2100XS/L | − | 12.0 | W |
| | | FSFR1800XS/L | − | 11.7 | |
| | | FSFR1700XS/L | − | 11.6 | |
| | | FSFR1600XS/L | − | 11.5 | |
| $T_J$ | Maximum Junction Temperature (Note 4) | | − | +150 | °C |
| | Recommended Operating Junction Temperature (Note 4) | | −40 | +130 | |
| $T_{STG}$ | Storage Temperature Range | | −55 | +150 | °C |

**MOSFET SECTION**

| | | | | | |
|---|---|---|---|---|---|
| $V_{DGR}$ | Drain Gate Voltage ($R_{GS}$ = 1 MΩ) | | 500 | − | V |
| $V_{GS}$ | Gate Source (GND) Voltage | | − | ±30 | V |
| $I_{DM}$ | Drain Current Pulsed (Note 5) | FSFR2100XS/L | − | 32 | A |
| | | FSFR1800XS/L | − | 23 | |
| | | FSFR1700XS/L | − | 20 | |
| | | FSFR1600XS/L | − | 18 | |
| $I_D$ | Continuous Drain Current | FSFR2100XS/L, $T_C$ = 25°C | − | 10.5 | A |
| | | FSFR2100XS/L, $T_C$ = 100°C | − | 6.5 | |
| | | FSFR1800XS/L, $T_C$ = 25°C | − | 7.0 | |
| | | FSFR1800XS/L, $T_C$ = 100°C | − | 4.5 | |
| | | FSFR1700XS/L, $T_C$ = 25°C | − | 6.0 | |
| | | FSFR1700XS/L, $T_C$ = 100°C | − | 3.9 | |
| | | FSFR1600XS/L, $T_C$ = 25°C | − | 4.5 | |
| | | FSFR1600XS/L, $T_C$ = 100°C | − | 2.7 | |

**PACKAGE SECTION**

| | | | |
|---|---|---|---|
| Torque | Recommended Screw Torque | 5~7 | kgf·cm |

Stresses exceeding those listed in the Maximum Ratings table may damage the device. If any of these limits are exceeded, device functionality should not be assumed, damage may occur and reliability may be affected.

3. Per MOSFET when both MOSFETs are conducting.
4. The maximum value of the recommended operating junction temperature is limited by thermal shutdown.
5. Pulse width is limited by maximum junction temperature.

DISCONTINUED
THIS DEVICE IS NOT RECOMMENDED FOR NEW DESIGN
PLEASE CONTACT YOUR onsemi REPRESENTATIVE FOR INFORMATION



Downloaded from Arrow.com.

**THERMAL IMPEDANCE** ($T_A$ = 25°C unless otherwise specified)

| Symbol | Parameter | | Value | Unit |
|---|---|---|---|---|
| $\theta_{JC}$ | Junction−to−Case Center Thermal Impedance (Both MOSFETs Conducting) | FSFR2100XS/L | 10.44 | °C/W |
| | | FSFR1800XS/L | 10.68 | |
| | | FSFR1700XS/L | 10.79 | |
| | | FSFR1600XS/L | 10.89 | |
| $\theta_{JA}$ | Junction−to−Ambient Thermal Impedance | FSFR XS Series | 80 | °C/W |

**ELECTRICAL CHARACTERISTICS** ($T_A$ = 25°C unless otherwise noted)

| Symbol | Parameter | | Test Condition | Min | Typ | Max | Unit |
|---|---|---|---|---|---|---|---|
| **MOSFET SECTION** | | | | | | | |
| $BV_{DSS}$ | Drain−to−Source Breakdown Voltage | | $I_D$ = 200 μA, $T_A$ = 25°C | 500 | – | – | V |
| | | | $I_D$ = 200 μA, $T_A$ = 125°C | – | 540 | – | |
| $R_{DS(ON)}$ | On−State Resistance | FSFR2100XS/L | $V_{GS}$ = 10 V, $I_D$ = 6.0 A | – | 0.41 | 0.51 | Ω |
| | | FSFR1800XS/L | $V_{GS}$ = 10 V, $I_D$ = 3.0 A | – | 0.77 | 0.95 | |
| | | FSFR1700XS/L | $V_{GS}$ = 10 V, $I_D$ = 2.0 A | – | 1.00 | 1.25 | |
| | | FSFR1600XS/L | $V_{GS}$ = 10 V, $I_D$ = 2.25 A | – | 1.25 | 1.55 | |
| $t_{rr}$ | Body Diode Reverse Recovery Time (Note 6) | FSFR2100XS/L | $V_{GS}$ = 0 V, $I_{Diode}$ = 10.5 A, $dI_{Diode}/dt$ = 100A/μs | – | 120 | – | ns |
| | | FSFR1800XS/L | $V_{GS}$ = 0 V, $I_{Diode}$ = 7.0 A, $dI_{Diode}/dt$ = 100 A/μs | – | 160 | – | |
| | | FSFR1700XS/L | $V_{GS}$ = 0 V, $I_{Diode}$ = 6.0 A, $dI_{Diode}/dt$ = 100 A/μs | – | 160 | – | |
| | | FSFR1600XS/L | $V_{GS}$ = 0 V, $I_{Diode}$ = 4.5 A, $dI_{Diode}/dt$ = 100 A/μs | – | 90 | – | |
| $C_{ISS}$ | Input Capacitance (Note 6) | FSFR2100XS/L | $V_{DS}$ = 25 V, $V_{GS}$ = 0 V, f = 1.0 MHz | – | 1175 | – | pF |
| | | FSFR1800XS/L | | – | 639 | – | pF |
| | | FSFR1700XS/L | | – | 512 | – | pF |
| | | FSFR1600XS/L | | – | 412 | – | pF |
| $C_{OSS}$ | Output Capacitance (Note 6) | FSFR2100XS/L | $V_{DS}$ = 25 V, $V_{GS}$ = 0 V, f = 1.0 MHz | – | 155 | – | pF |
| | | FSFR1800XS/L | | – | 82.1 | – | pF |
| | | FSFR1700XS/L | | – | 66.5 | – | pF |
| | | FSFR1600XS/L | | – | 52.7 | – | pF |
| **SUPPLY SECTION** | | | | | | | |
| $I_{LK}$ | Offset Supply Leakage Current | | $HV_{CC}$ = $V_{CTR}$ = 500 V | – | – | 50 | μA |
| $I_QHV_{CC}$ | Quiescent $HV_{CC}$ Supply Current | | ($HV_{CC}$UV+) − 0.1 V | – | 50 | 120 | μA |
| $I_QLV_{CC}$ | Quiescent $LV_{CC}$ Supply Current | | ($LV_{CC}$UV+) − 0.1 V | – | 100 | 200 | μA |
| $I_OHV_{CC}$ | Operating $HV_{CC}$ Supply Current (RMS Value) | | $f_{OSC}$ = 100 kHz | – | 6 | 9 | mA |
| | | | No Switching | – | 100 | 200 | μA |
| $I_OLV_{CC}$ | Operating $LV_{CC}$ Supply Current (RMS Value) | | $f_{OSC}$ = 100 kHz | – | 7 | 11 | mA |
| | | | No Switching | – | 2 | 4 | mA |

DISCONTINUED
THIS DEVICE IS NOT RECOMMENDED FOR NEW DESIGN
PLEASE CONTACT YOUR onsemi
REPRESENTATIVE FOR INFORMATION



Downloaded from Arrow.com.

**ELECTRICAL CHARACTERISTICS** ($T_A$ = 25°C unless otherwise noted) (continued)

| Symbol | Parameter | Test Condition | Min | Typ | Max | Unit |
|---|---|---|---|---|---|---|
| **UVLO SECTION** | | | | | | |
| $LV_{CC}UV+$ | $LV_{CC}$ Supply Under−Voltage Positive Going Threshold ($LV_{CC}$ Start) | | 11.2 | 12.5 | 13.8 | V |
| $LV_{CC}UV-$ | $LV_{CC}$ Supply Under−Voltage Negative Going Threshold ($LV_{CC}$ Stop) | | 8.9 | 10.0 | 11.1 | V |
| $LV_{CC}UVH$ | $LV_{CC}$ Supply Under−Voltage Hysteresis | | − | 2.50 | − | V |
| $HV_{CC}UV+$ | $HV_{CC}$ Supply Under−Voltage Positive Going Threshold ($HV_{CC}$ Start) | | 8.2 | 9.2 | 10.2 | V |
| $HV_{CC}UV-$ | $HV_{CC}$ Supply Under−Voltage Negative Going Threshold ($HV_{CC}$ Stop) | | 7.8 | 8.7 | 9.6 | V |
| $HV_{CC}UVH$ | $HV_{CC}$ Supply Under−Voltage Hysteresis | | − | 0.5 | − | V |
| **OSCILLATOR & FEEDBACK SECTION** | | | | | | |
| $V_{RT}$ | V−I Converter Threshold Voltage | $R_T$ = 5.2 kΩ | 1.5 | 2.0 | 2.5 | V |
| $f_{OSC}$ | Output Oscillation Frequency | | 94 | 100 | 106 | kHz |
| DC | Output Duty Cycle | | 48 | 50 | 52 | % |
| $f_{SS}$ | Internal Soft−Start Initial Frequency | $f_{SS} = f_{OSC}$ + 40 kHz, $R_T$ = 5.2 kΩ | − | 140 | | kHz |
| $t_{SS}$ | Internal Soft−Start Time | | 2 | 3 | 4 | ms |
| **PROTECTION SECTION** | | | | | | |
| $V_{CssH}$ | Beginning Voltage to Discharge $C_{SS}$ | | 0.9 | 1.0 | 1.1 | V |
| $V_{CssL}$ | Beginning Voltage to Charge $C_{SS}$ and Restart | | 0.16 | 0.20 | 0.24 | V |
| $V_{OVP}$ | $LV_{CC}$ Over−Voltage Protection | $LV_{CC}$ > 21 V | 21 | 23 | 25 | V |
| $V_{AOCP}$ | AOCP Threshold Voltage | | −1.0 | −0.9 | −0.8 | V |
| $t_{BAO}$ | AOCP Blanking Time (Note 6) | $V_{CS} < V_{AOCP}$ | − | 50 | − | ns |
| $V_{OCP}$ | OCP Threshold Voltage | | −0.64 | −0.58 | −0.52 | V |
| $t_{BO}$ | OCP Blanking Time (Note 6) | $V_{CS} < V_{OCP}$ | 1.0 | 1.5 | 2.0 | μs |
| $t_{DA}$ | Delay Time (Low Side) Detecting from $V_{AOCP}$ to Switch Off (Note 6) | | − | 250 | 400 | ns |
| $T_{SD}$ | Thermal Shutdown Temperature (Note 6) | | 120 | 135 | 150 | °C |
| **DEAD−TIME CONTROL SECTION** | | | | | | |
| $D_T$ | Dead Time (Note 7) | | − | 350 | − | ns |

Product parametric performance is indicated in the Electrical Characteristics for the listed test conditions, unless otherwise noted. Product performance may not be indicated by the Electrical Characteristics if operated under different conditions.

6. This parameter, although guaranteed, is not tested in production.
7. These parameters, although guaranteed, are tested only in EDS (wafer test) process.

DISCONTINUED
THIS DEVICE IS NOT RECOMMENDED FOR NEW DESIGN
PLEASE CONTACT YOUR onsemi REPRESENTATIVE FOR INFORMATION



Downloaded from Arrow.com.

## TYPICAL PERFORMANCE CHARACTERISTICS

(These characteristic graphs are normalized at $T_A$ = 25°C)

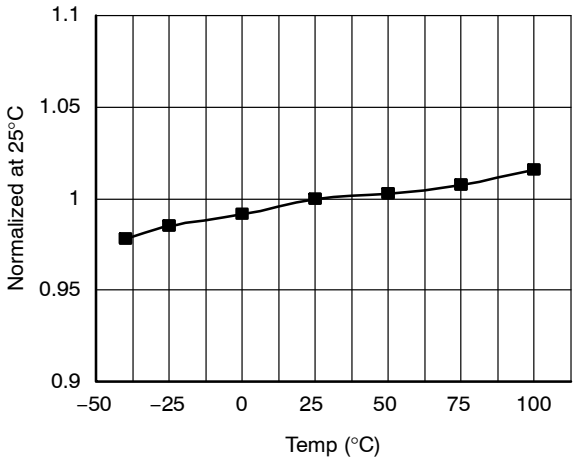


**Figure 4. Low−Side MOSFET Duty Cycle vs. Temperature**

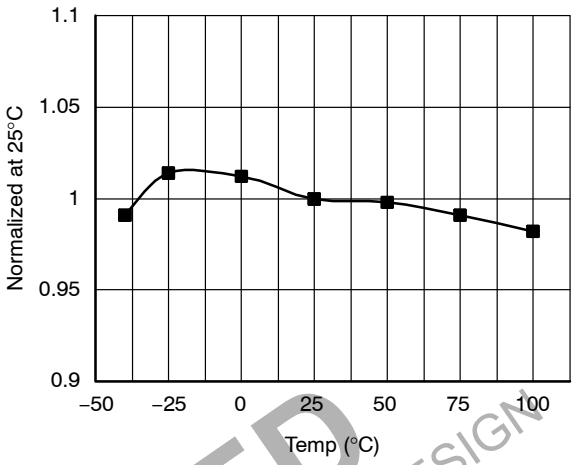


**Figure 5. Switching Frequency vs. Temperature**

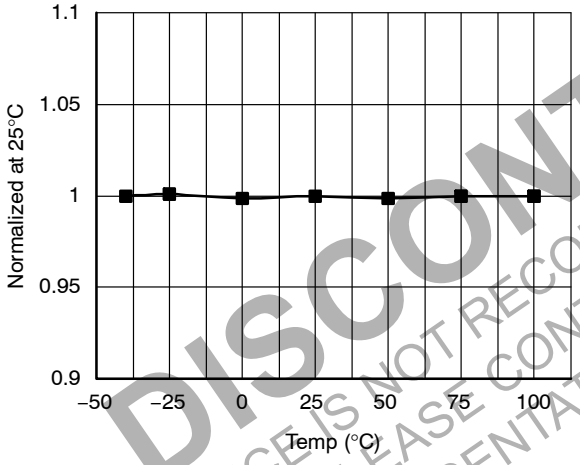


**Figure 6. High−Side $V_{CC}$ ($HV_{CC}$) Start vs. Temperature**

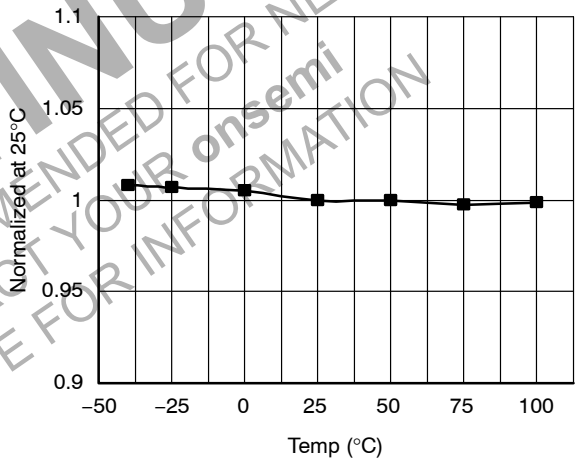


**Figure 7. High−Side $V_{CC}$ ($HV_{CC}$) Stop vs. Temperature**

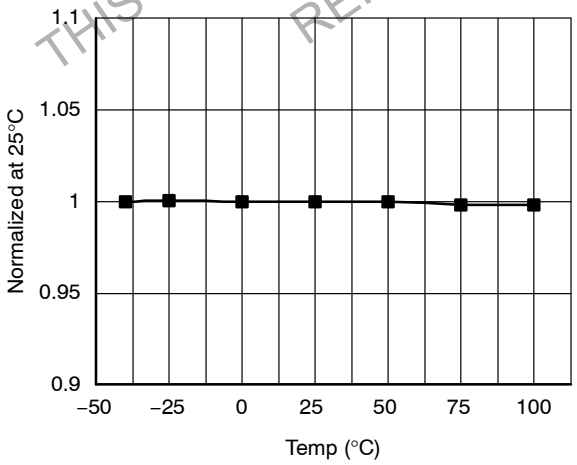


**Figure 8. Low−Side $V_{CC}$ ($LV_{CC}$) Start vs. Temperature**

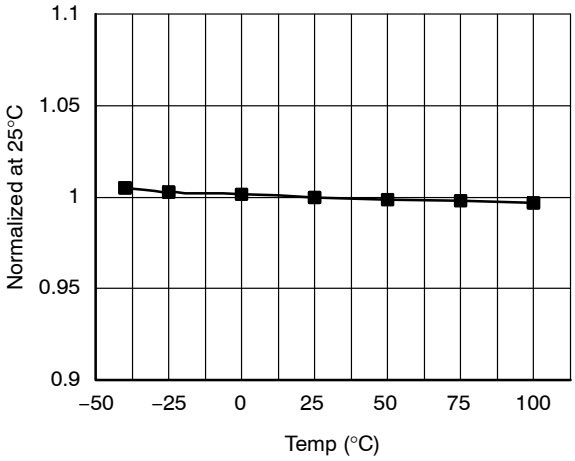


**Figure 9. Low−Side $V_{CC}$ ($LV_{CC}$) Stop vs. Temperature**

DISCONTINUED
THIS DEVICE IS NOT RECOMMENDED FOR NEW DESIGN
PLEASE CONTACT YOUR onsemi
REPRESENTATIVE FOR INFORMATION



Downloaded from Arrow.com.

## TYPICAL PERFORMANCE CHARACTERISTICS (continued)

(These characteristic graphs are normalized at $T_A$ = 25°C)

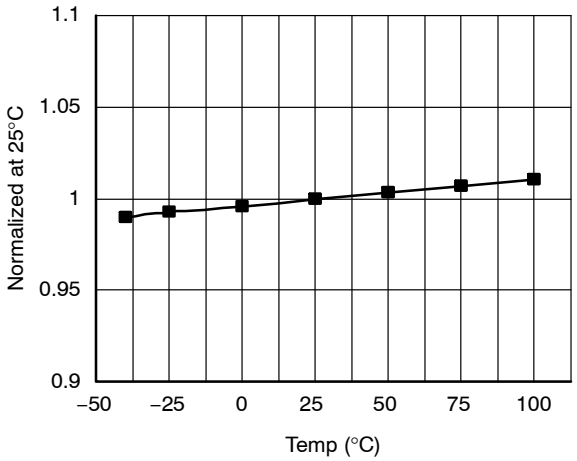


**Figure 10. $LV_{CC}$ OVP Voltage vs. Temperature**

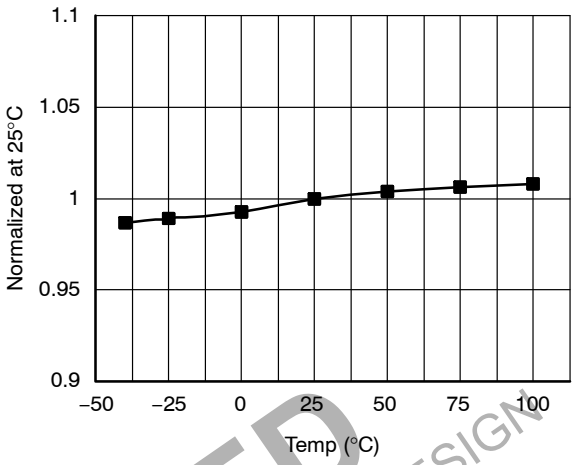


**Figure 11. $R_T$ Voltage vs. Temperature**

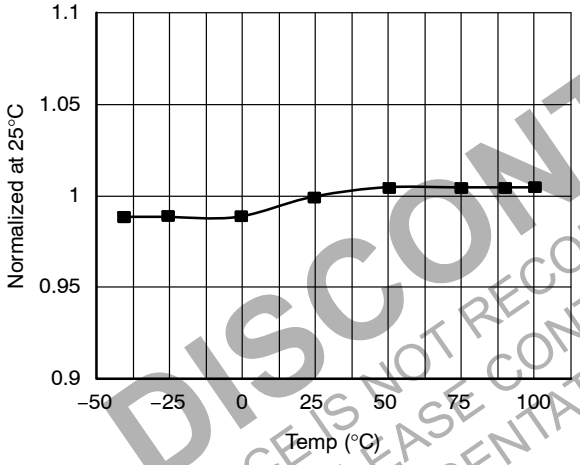


**Figure 12. $V_{CssL}$ vs. Temperature**

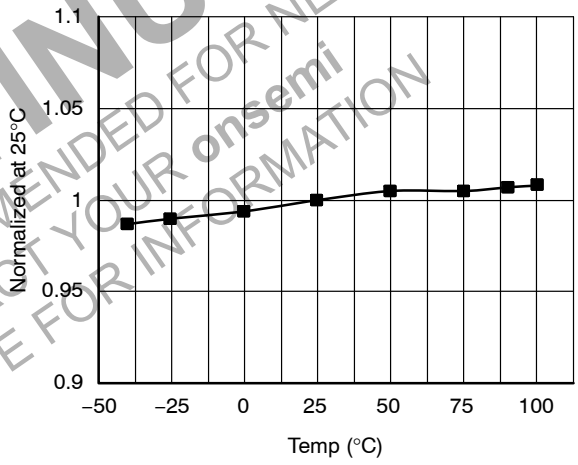


**Figure 13. $V_{CssH}$ vs. Temperature**

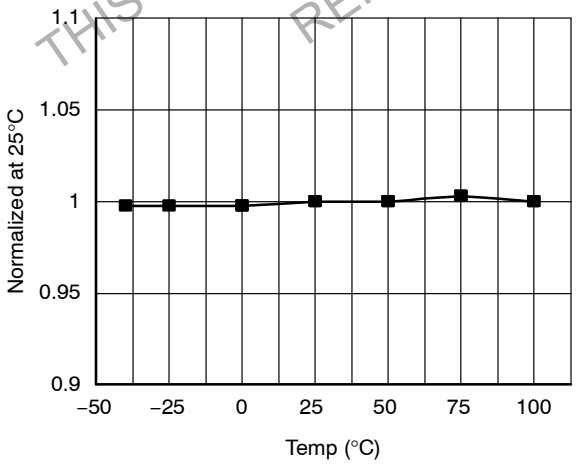


**Figure 14. OCP Voltage vs. Temperature**

DISCONTINUED
THIS DEVICE IS NOT RECOMMENDED FOR NEW DESIGN
PLEASE CONTACT YOUR onsemi
REPRESENTATIVE FOR INFORMATION



Downloaded from Arrow.com.

## FUNCTIONAL DESCRIPTION

### Basic Operation

FSFR−XS series is designed to drive high−side and low−side MOSFETs complementarily with 50% duty cycle. A fixed dead time of 350 ns is introduced between consecutive transitions, as shown in Figure 15.

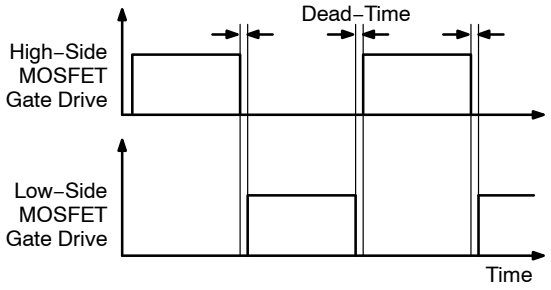


**Figure 15. MOSFETs Gate Drive Signal**

### Internal Oscillator

FSFR−XS series employs a current−controlled oscillator, as shown in Figure 16. Internally, the voltage of $R_T$ pin is regulated at 2 V and the charging / discharging current for the oscillator capacitor, $C_T$, is obtained by copying the current flowing out of the $R_T$ pin ($I_{CTC}$) using a current mirror. Therefore, the switching frequency increases as $I_{CTC}$ increases.

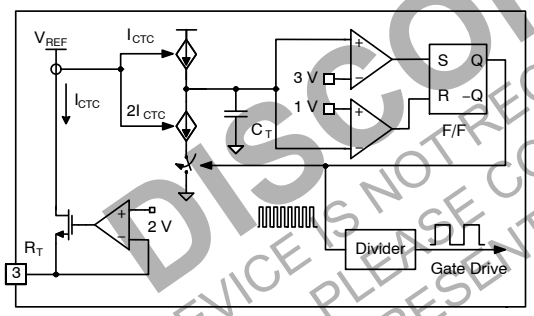


**Figure 16. Current−Controlled Oscillator**

### Frequency Setting

Figure 17 shows the typical voltage gain curve of a resonant converter, where the gain is inversely proportional to the switching frequency in the ZVS region. The output voltage can be regulated by modulating the switching frequency. Figure 18 shows the typical circuit configuration for the $R_T$ pin, where the opto−coupler transistor is connected to the $R_T$ pin to modulate the switching frequency.

The minimum switching frequency is determined as:

$$f^{min} = \frac{5.2\ k\Omega}{R_{min}} \times 100\ (kHz) \qquad \text{(eq. 1)}$$

Assuming the saturation voltage of opto−coupler transistor is 0.2 V, the maximum switching frequency is determined as:

$$f^{max} = \left(\frac{5.2\ k\Omega}{R_{min}} + \frac{4.68\ k\Omega}{R_{max}}\right) \times 100\ (kHz) \qquad \text{(eq. 2)}$$

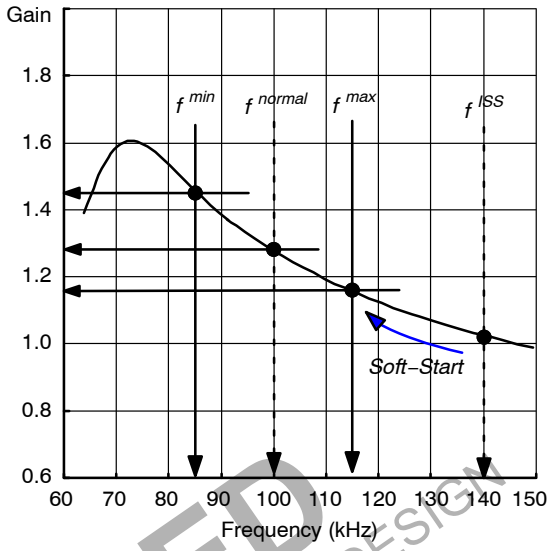


**Figure 17. Resonant Converter Typical Gain Curve**

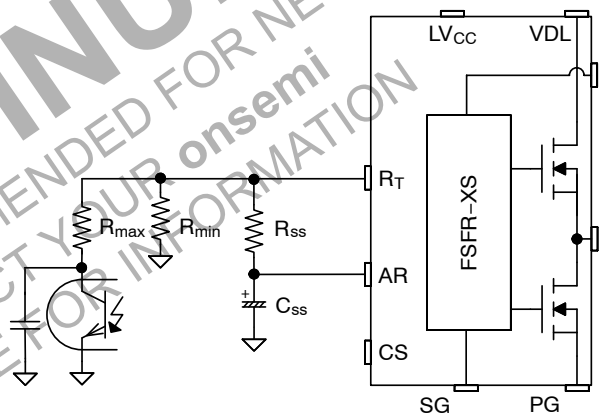


**Figure 18. Frequency Control Circuit**

To prevent excessive inrush current and overshoot of output voltage during startup, increase the voltage gain of the resonant converter progressively. Since the voltage gain of the resonant converter is inversely proportional to the switching frequency, the soft−start is implemented by sweeping down the switching frequency from an initial high frequency ($f^{ISS}$) until the output voltage is established. The soft−start circuit is made by connecting R−C series network on the $R_T$ pin, as shown in Figure 18. FSFR−XS series also has a 3 ms internal soft−start to reduce the current overshoot during the initial cycles, which adds 40 kHz to the initial frequency of the external soft−start circuit, as shown in Figure 19. The initial frequency of the soft−start is given as:

$$f^{ISS} = \left(\frac{5.2\ k\Omega}{R_{min}} + \frac{5.2\ k\Omega}{R_{SS}}\right) \times 100 + 40\ (kHz) \qquad \text{(eq. 3)}$$

DISCONTINUED
THIS DEVICE IS NOT RECOMMENDED FOR NEW DESIGN
PLEASE CONTACT YOUR onsemi
REPRESENTATIVE FOR INFORMATION



Downloaded from Arrow.com.

It is typical to set the initial frequency of soft−start two to three times the resonant frequency ($f_O$) of the resonant network. The soft−start time is three to four times the RC time constant. The RC time constant is:

$$\tau = R_{SS} \cdot C_{SS} \quad \text{(eq. 4)}$$

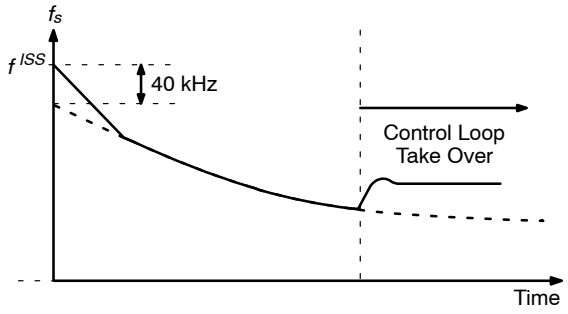


**Figure 19. Frequency Sweeping of Soft−Start**

### Self Auto−Restart

The FSFR−XS series can restart automatically even though any built−in protections are triggered with external supply voltage. As can be seen in Figure 20 and Figure 21, once any protections are triggered, the M1 switch turns on and the V−I converter is disabled. $C_{SS}$ starts to discharge until $V_{Css}$ across $C_{SS}$ drops to $V_{CssL}$. Then, all protections are reset, M1 turns off, and the V−I converter resumes at the same time. The FSFR−XS starts switching again with soft−start. If the protections occur while $V_{Css}$ is under $V_{CssL}$ and $V_{CssH}$ level, the switching is terminated immediately, $V_{Css}$ continues to increase until reaching $V_{CssH}$, then $C_{SS}$ is discharged by M1.

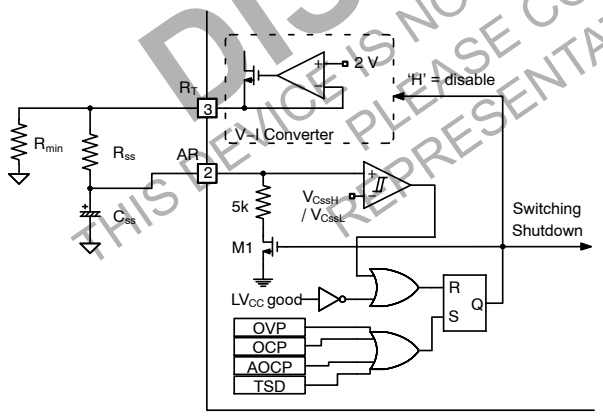


**Figure 20. Internal Block of AR Pin**

After protections trigger, FSFR−XS is disabled during the stop−time, $t_{stop}$, where $V_{Css}$ decreases and reaches to $V_{CssL}$. The stop−time of FSFR−XS can be estimated as:

$$t_{STOP} = C_{SS} \cdot \{(R_{SS} + R_{MIN}) \parallel 5\ k\Omega\} \quad \text{(eq. 5)}$$

The soft−start time, $t_{s/s}$ can be set as Equation (4).

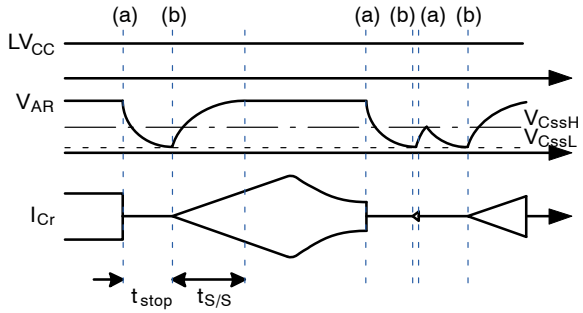


(a) Protections are triggered, (b) FSFR−US restarts

**Figure 21. Self Auto−Restart Operation**

### Protection Circuits

The FSFR−XS series has several self−protective functions, such as Over−Current Protection (OCP), Abnormal Over−Current Protection (AOCP), Over−Voltage Protection (OVP), and Thermal Shutdown (TSD). These protections are auto−restart mode protections, as shown in Figure 22.

Once a fault condition is detected, switching is terminated and the MOSFETs remain off. When $LV_{CC}$ falls to the $LV_{CC}$ stop voltage of 10 V or AR signal is HIGH, the protection is reset. The FSFR−XS resumes normal operation when $LV_{CC}$ reaches the start voltage of 12.5 V.

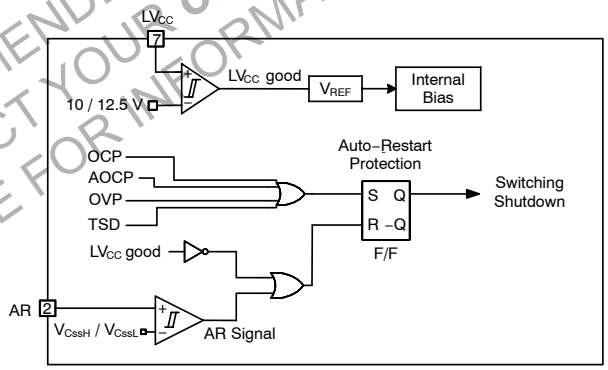


**Figure 22. Protection Blocks**

*Over−Current Protection (OCP)*

When the sensing pin voltage drops below −0.58 V, OCP is triggered and the MOSFETs remain off. This protection has a shutdown time delay of 1.5 μs to prevent premature shutdown during startup.

*Abnormal Over−Current Protection (AOCP)*

If the secondary rectifier diodes are shorted, large current with extremely high di/dt can flow through the MOSFET before OCP is triggered. AOCP is triggered without shutdown delay if the sensing pin voltage drops below −0.9 V.

*Over−Voltage Protection (OVP)*

When the $LV_{CC}$ reaches 23 V, OVP is triggered. This protection is used when auxiliary winding of the transformer to supply $V_{CC}$ to the power switch is utilized.

DISCONTINUED
THIS DEVICE IS NOT RECOMMENDED FOR NEW DESIGN
PLEASE CONTACT YOUR onsemi
REPRESENTATIVE FOR INFORMATION



Downloaded from Arrow.com.

*Thermal Shutdown (TSD)*

The MOSFETs and the control IC in one package makes it easier for the control IC to detect the abnormal over−temperature of the MOSFETs. If the temperature exceeds approximately 130°C, thermal shutdown triggers.

### Current Sensing Using a Resistor

FSFR−XS series senses drain current as a negative voltage, as shown in Figure 23 and Figure 24. Half−wave sensing allows low power dissipation in the sensing resistor, while full−wave sensing has less switching noise in the sensing signal.

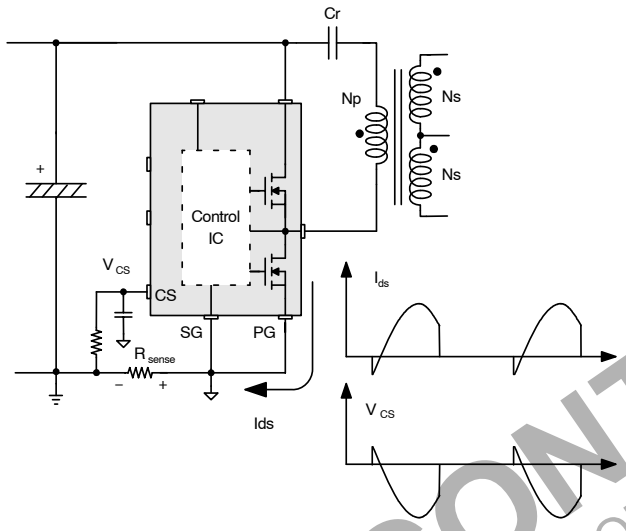


**Figure 23. Half−Wave Sensing**

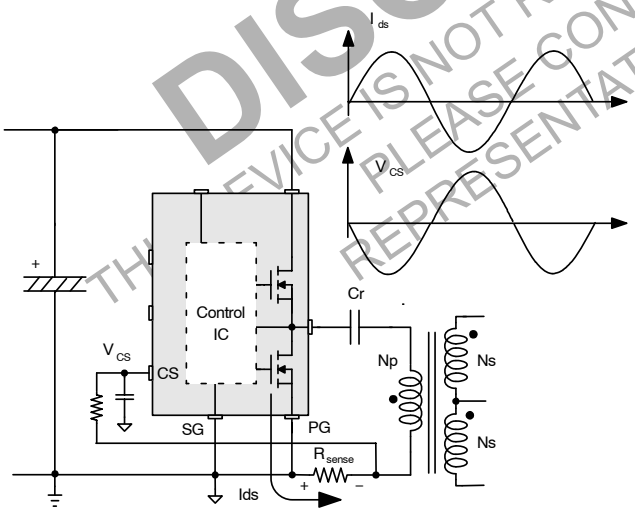


**Figure 24. Full−Wave Sensing**

### PCB Layout Guidelines

Duty imbalance problems may occur due to the radiated noise from the main transformer, the inequality of the secondary side leakage inductances of main transformer, and so on. This is one of the reasons that the control components in the vicinity of $R_T$ pin are enclosed by the primary current flow pattern on PCB layout. The direction of the magnetic field on the components caused by the primary current flow is changed when the high− and low−side MOSFET turn on by turns. The magnetic fields with opposite directions induce a current through, into, or out of the $R_T$ pin, which makes the turn−on duration of each MOSFET different. It is strongly recommended to separate the control components in the vicinity of $R_T$ pin from the primary current flow pattern on PCB layout. Figure 25 shows an example for the duty−balanced case.

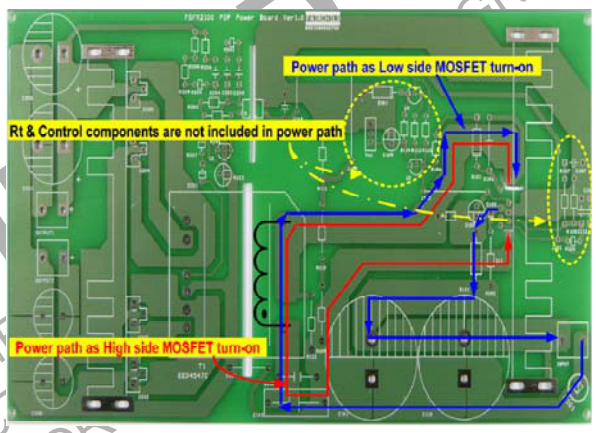


**Figure 25. Example for Duty Balancing**

DISCONTINUED
THIS DEVICE IS NOT RECOMMEND FOR NEW DESIGN
PLEASE CONTACT YOUR ONSEMI
REPRESENTATIVE FOR INFORMATION

UniFET is trademark of Semiconductor Components Industries, LLC dba “**onsemi**” or its affiliates and/or subsidiaries in the United States and/or other countries.



Downloaded from Arrow.com.

**SIP9 26x10.5**
CASE 127EM
ISSUE O

DATE 31 DEC 2016

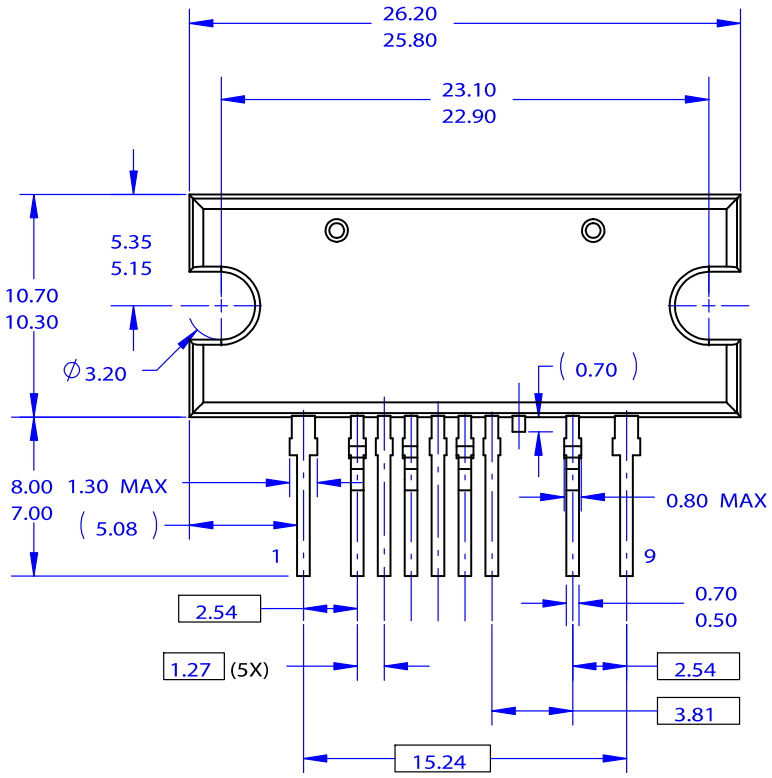


FRONT VIEW

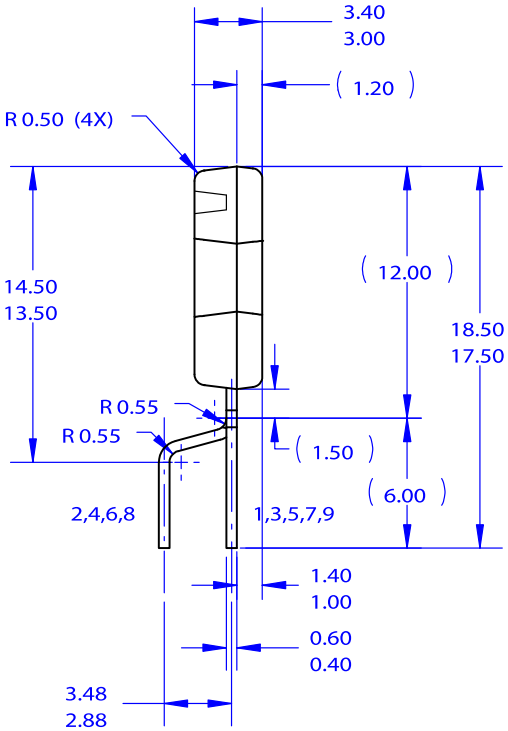


RIGHT SIDE VIEW

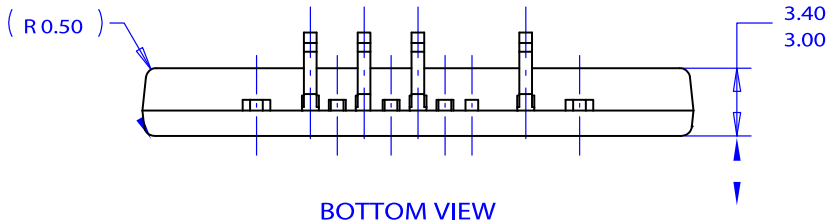


BOTTOM VIEW

NOTES: UNLESS OTHERWISE SPECIFIED

A. THIS PACKAGE DOES NOT COMPLY TO
ANY CURRENT PACKAGING STANDARD.
B. ALL DIMENSIONS ARE IN MILLIMETERS.
C. DIMENSIONS ARE EXCLUSIVE OF BURRS,
MOLD FLASH AND TIE BAR PROTRUSIONS.

| | | |
|---|---|---|
| **DOCUMENT NUMBER:** | **98AON13718G** | Electronic versions are uncontrolled except when accessed directly from the Document Repository. Printed versions are uncontrolled except when stamped "CONTROLLED COPY" in red. |
| **DESCRIPTION:** | **SIP9 26x10.5** | **PAGE 1 OF 1** |

**onsemi** and onsemi are trademarks of Semiconductor Components Industries, LLC dba **onsemi** or its subsidiaries in the United States and/or other countries. **onsemi** reserves the right to make changes without further notice to any products herein. **onsemi** makes no warranty, representation or guarantee regarding the suitability of its products for any particular purpose, nor does **onsemi** assume any liability arising out of the application or use of any product or circuit, and specifically disclaims any and all liability, including without limitation special, consequential or incidental damages. **onsemi** does not convey any license under its patent rights nor the rights of others.



Downloaded from Arrow.com.

**SIP9 26x10.5**
CASE 127EN
ISSUE O

DATE 31 DEC 2016

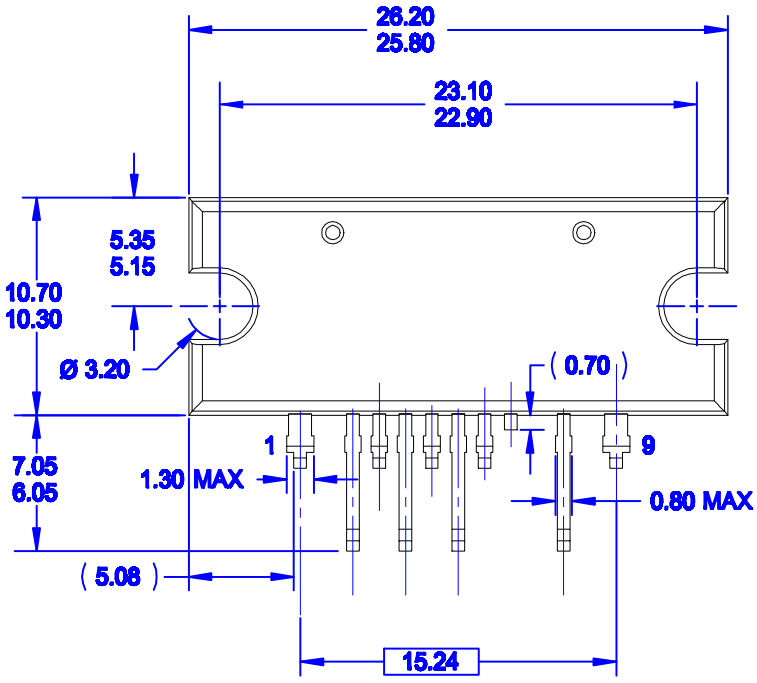


BOTTOM VIEW

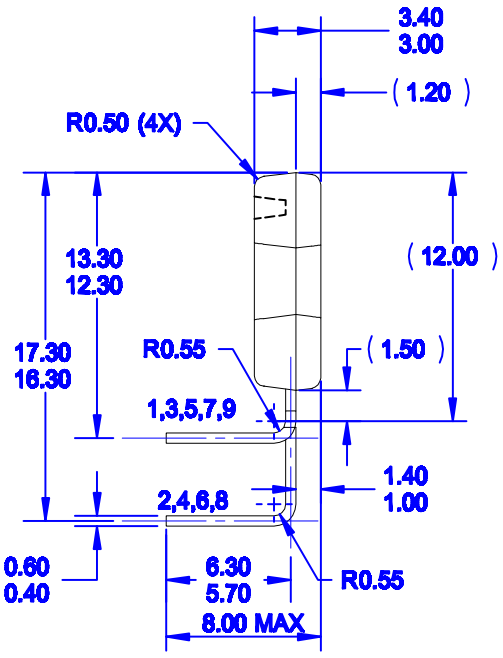


RIGHT SIDE VIEW

Note: Terminal face upwards

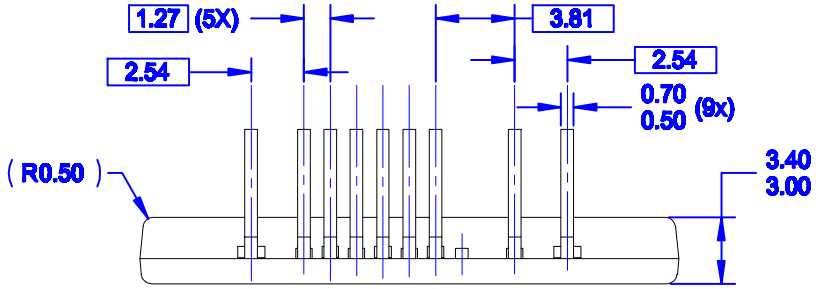


BACK VIEW

NOTES: UNLESS OTHERWISE SPECIFIED

A. THIS PACKAGE DOES NOT COMPLY TO ANY CURRENT PACKAGING STANDARD.
B. ALL DIMENSIONS ARE IN MILLIMETERS.
C. DIMENSIONS ARE EXCLUSIVE OF BURRS, MOLD FLASH AND TIE BAR PROTRUSIONS.

| | | | |
|---|---|---|---|
| **DOCUMENT NUMBER:** | **98AON13719G** | Electronic versions are uncontrolled except when accessed directly from the Document Repository. Printed versions are uncontrolled except when stamped "CONTROLLED COPY" in red. | |
| **DESCRIPTION:** | **SIP9 26x10.5** | | **PAGE 1 OF 1** |

**onsemi** and ONSEMI are trademarks of Semiconductor Components Industries, LLC dba **onsemi** or its subsidiaries in the United States and/or other countries. **onsemi** reserves the right to make changes without further notice to any products herein. **onsemi** makes no warranty, representation or guarantee regarding the suitability of its products for any particular purpose, nor does **onsemi** assume any liability arising out of the application or use of any product or circuit, and specifically disclaims any and all liability, including without limitation special, consequential or incidental damages. **onsemi** does not convey any license under its patent rights nor the rights of others.



Downloaded from Arrow.com.

**onsemi**, ONSEMI , and other names, marks, and brands are registered and/or common law trademarks of Semiconductor Components Industries, LLC dba "**onsemi**" or its affiliates and/or subsidiaries in the United States and/or other countries. **onsemi** owns the rights to a number of patents, trademarks, copyrights, trade secrets, and other intellectual property. A listing of **onsemi**'s product/patent coverage may be accessed at www.onsemi.com/site/pdf/Patent−Marking.pdf. **onsemi** reserves the right to make changes at any time to any products or information herein, without notice. The information herein is provided "as−is" and **onsemi** makes no warranty, representation or guarantee regarding the accuracy of the information, product features, availability, functionality, or suitability of its products for any particular purpose, nor does **onsemi** assume any liability arising out of the application or use of any product or circuit, and specifically disclaims any and all liability, including without limitation special, consequential or incidental damages. Buyer is responsible for its products and applications using **onsemi** products, including compliance with all laws, regulations and safety requirements or standards, regardless of any support or applications information provided by **onsemi**. "Typical" parameters which may be provided in **onsemi** data sheets and/or specifications can and do vary in different applications and actual performance may vary over time. All operating parameters, including "Typicals" must be validated for each customer application by customer's technical experts. **onsemi** does not convey any license under any of its intellectual property rights nor the rights of others. **onsemi** products are not designed, intended, or authorized for use as a critical component in life support systems or any FDA Class 3 medical devices or medical devices with a same or similar classification in a foreign jurisdiction or any devices intended for implantation in the human body. Should Buyer purchase or use **onsemi** products for any such unintended or unauthorized application, Buyer shall indemnify and hold **onsemi** and its officers, employees, subsidiaries, affiliates, and distributors harmless against all claims, costs, damages, and expenses, and reasonable attorney fees arising out of, directly or indirectly, any claim of personal injury or death associated with such unintended or unauthorized use, even if such claim alleges that **onsemi** was negligent regarding the design or manufacture of the part. **onsemi** is an Equal Opportunity/Affirmative Action Employer. This literature is subject to all applicable copyright laws and is not for resale in any manner.

## ADDITIONAL INFORMATION

**TECHNICAL PUBLICATIONS**:
**Technical Library:** www.onsemi.com/design/resources/technical−documentation
**onsemi Website:** www.onsemi.com

**ONLINE SUPPORT**: www.onsemi.com/support
**For additional information, please contact your local Sales Representative at** www.onsemi.com/support/sales

◊

Downloaded from Arrow.com.