CUI Devices is now Same Sky! Learn More

MODEL: PP3-002A | DESCRIPTION: DC POWER PLUG

FEATURES

- cable mount
- 6 A current rating
- round cover



RoHS

SPECIFICATIONS

parameter	conditions/description	min	typ	max	units
rated input voltage			20		Vdc
rated input current				6	A
contact resistance	between plug and jack			30	mΩ
insulation resistance	at 500 Vdc	100			MΩ
voltage withstand	for 1 minute			500	Vac
insertion force	when mating with a standard jack	0.5		2.5	kgf
withdrawal force	when mating with a standard jack	0.3		2	kgf
operating temperature		-25		70	°C
operating humidity				85	%
life			5,000		cycles
flammability rating	see material table				
RoHS	yes				

Downloaded from Arrow.com.

MECHANICAL DRAWING

units: mm
tolerance:
X≤1.0: ±0.1 mm
1.0<X≤6.0: ±0.2 mm
6.0<X≤12.0: ±0.3 mm
12.0<X≤25.0: ±0.4 mm
X>25.0: ±0.5 mm
unless otherwise noted

ITEM	DESCRIPTION	MATERIAL	PLATING/COLOR
1	insulator	POM (UL94HB)	black
2	outer barrel	brass	nickel
3	center contact	brass	nickel
4	crimp contact	brass	nickel
5	cover	ABS (UL94HB)	black
6	inner barrel	brass	nickel

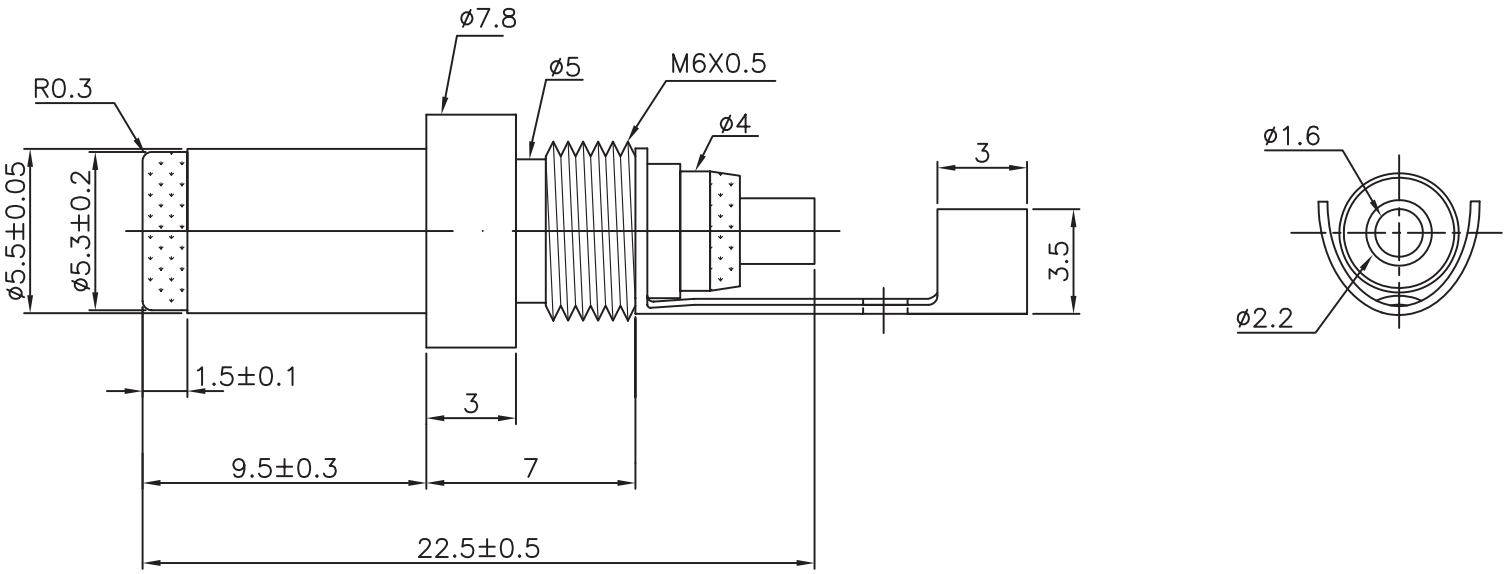

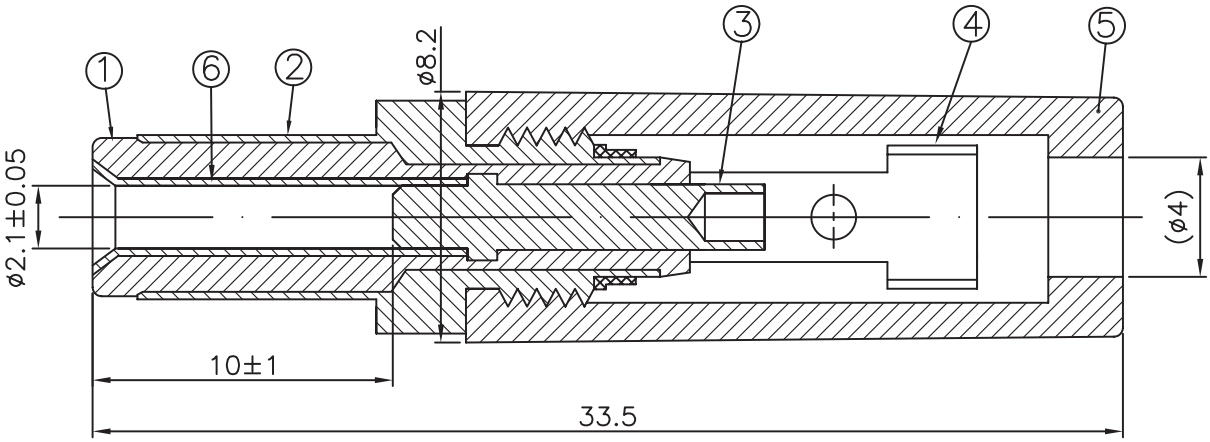

Downloaded from Arrow.com.

REVISION HISTORY

rev.	description	date
1.0	initial release	03/10/2006
1.01	added tolerances	08/17/2006
1.02	rating change	03/23/2007
1.03	updated datasheet	06/21/2019
1.04	brand update	11/08/2019
1.05	logo, datasheet style update	08/05/2022
1.06	CUI Devices rebranded to Same Sky	09/12/2024

The revision history provided is for informational purposes only and is believed to be accurate.

same sky

Same Sky offers a one (1) year limited warranty. Complete warranty information is listed on our website.

Same Sky reserves the right to make changes to the product at any time without notice. Information provided by Same Sky is believed to be accurate and reliable. However, no responsibility is assumed by Same Sky for its use, nor for any infringements of patents or other rights of third parties which may result from its use.

Same Sky products are not authorized or warranted for use as critical components in equipment that requires an extremely high level of reliability. A critical component is any component of a life support device or system whose failure to perform can be reasonably expected to cause the failure of the life support device or system, or to affect its safety or effectiveness.

sameskydevices.com

Downloaded from Arrow.com.