MachXO2 Family Data Sheet

Data Sheet

FPGA-DS-02056-4.7

July 2026

Downloaded from Arrow.com.

Disclaimers

Lattice makes no warranty, representation, or guarantee regarding the accuracy of information contained in this document or the suitability of its products for any particular purpose. All information herein is provided AS IS, with all faults, and all associated risk is the responsibility entirely of the Buyer. The information provided herein is for informational purposes only and may contain technical inaccuracies or omissions, and may be otherwise rendered inaccurate for many reasons, and Lattice assumes no obligation to update or otherwise correct or revise this information. Products sold by Lattice have been subject to limited testing and it is the Buyer's responsibility to independently determine the suitability of any products and to test and verify the same. LATTICE PRODUCTS AND SERVICES ARE NOT DESIGNED, MANUFACTURED, OR TESTED FOR USE IN LIFE OR SAFETY CRITICAL SYSTEMS, HAZARDOUS ENVIRONMENTS, OR ANY OTHER ENVIRONMENTS REQUIRING FAIL-SAFE PERFORMANCE, INCLUDING ANY APPLICATION IN WHICH THE FAILURE OF THE PRODUCT OR SERVICE COULD LEAD TO DEATH, PERSONAL INJURY, SEVERE PROPERTY DAMAGE OR ENVIRONMENTAL HARM (COLLECTIVELY, "HIGH-RISK USES"). FURTHER, BUYER MUST TAKE PRUDENT STEPS TO PROTECT AGAINST PRODUCT AND SERVICE FAILURES, INCLUDING PROVIDING APPROPRIATE REDUNDANCIES, FAIL-SAFE FEATURES, AND/OR SHUT-DOWN MECHANISMS. LATTICE EXPRESSLY DISCLAIMS ANY EXPRESS OR IMPLIED WARRANTY OF FITNESS OF THE PRODUCTS OR SERVICES FOR HIGH-RISK USES. The information provided in this document is proprietary to Lattice Semiconductor, and Lattice reserves the right to make any changes to the information in this document or to any products at any time without notice.

© 2026 Lattice Semiconductor Corp. All Lattice trademarks, registered trademarks, patents, and disclaimers are as listed at www.latticesemi.com/legal.
All other brand or product names are trademarks or registered trademarks of their respective holders. The specifications and information herein are subject to change without notice.

Downloaded from Arrow.com.

Contents

Contents 3
Acronyms in This Document 9
1. Introduction 10
1.1. Features 11
1.1.1. Flexible Logic Architecture 11
1.1.2. Ultra Low Power Devices 11
1.1.3. Embedded and Distributed Memory 11
1.1.4. On-Chip User Flash Memory 11
1.1.5. Pre-Engineered Source Synchronous I/O 11
1.1.6. High Performance, Flexible I/O Buffer 11
1.1.7. Flexible On-Chip Clocking 11
1.1.8. Non-volatile, Infinitely Reconfigurable 11
1.1.9. TransFR™ Reconfiguration 11
1.1.10. Enhanced System Level Support 11
1.1.11. Broad Range of Package Options 11
1.1.12. Application 11
2. Architecture 14
2.1. Architecture Overview 14
2.2. PFU Blocks 15
2.2.1. Slices 16
2.2.2. Modes of Operation 17
2.2.3. RAM Mode 18
2.2.4. ROM Mode 18
2.3. Routing 18
2.4. Clock/Control Distribution Network 18
2.4.1. sysCLOCK Phase Locked Loops (PLLs) 20
2.5. sysMEM Embedded Block RAM Memory 23
2.6. Programmable I/O Cells (PIC) 26
2.7. PIO 28
2.7.1. Input Register Block 28
2.7.2. Output Register Block 30
2.7.3. Tri-state Register Block 31
2.8. Input Gearbox 31
2.9. Output Gearbox 33
2.10. DDR Memory Support 35
2.11. DQS Read Write Block 35
2.12. sysI/O Buffer 35
2.12.1. Typical I/O Behavior During Power-up 36
2.12.2. Supported Standards 36
2.12.3. sysI/O Buffer Banks 39
2.13. Hot Socketing 40
2.14. On-chip Oscillator 40
2.15. Embedded Hardened IP Functions and User Flash Memory 41
2.15.1. Hardened I2C IP Core 41
2.15.2. Hardened SPI IP Core 42
2.15.3. Hardened Timer/Counter 43
2.16. User Flash Memory (UFM) 44
2.17. Standby Mode and Power Saving Options 45
2.18. Power-On-Reset 46
2.19. Configuration and Testing 46
2.19.1. IEEE 1149.1-Compliant Boundary Scan Testability 46
2.19.2. Device Configuration 47

© 2026 Lattice Semiconductor Corp. All Lattice trademarks, registered trademarks, patents, and disclaimers are as listed at www.latticesemi.com/legal.
All other brand or product names are trademarks or registered trademarks of their respective holders. The specifications and information herein are subject to change without notice.

Downloaded from Arrow.com.

2.20. TraceID 48
2.21. Density Shifting 48
3. DC and Switching Characteristics 49
3.1. Absolute Maximum Ratings 49
3.2. Recommended Operating Conditions 49
3.3. Power Supply Ramp Rates 49
3.4. Power-On-Reset Voltage Levels 50
3.5. Programming/Erase Specifications 50
3.6. Hot Socketing Specifications 50
3.7. ESD Performance 51
3.8. DC Electrical Characteristics 51
3.9. Static Supply Current – ZE Devices 52
3.10. Static Power Consumption Contribution of Different Components – ZE Devices 52
3.11. Static Supply Current – HC/HE Devices 53
3.12. Programming and Erase Flash Supply Current – HC/HE Devices 53
3.13. Programming and Erase Flash Supply Current – ZE Devices 54
3.14. sysI/O Recommended Operating Conditions 54
3.15. sysI/O Single-Ended DC Electrical Characteristics 55
3.16. sysI/O Differential Electrical Characteristics 57
3.16.1. LVDS 57
3.16.2. LVDS Emulation 57
3.16.3. BLVDS 58
3.16.4. LVPECL 59
3.16.5. RSDS 60
3.16.6. Comparator Function 60
3.17. Typical Building Block Function Performance – HC/HE Devices 61
3.17.1. Pin-to-Pin Performance (LVCMOS25 12 mA Drive) 61
3.17.2. Register-to-Register Performance 61
3.18. Typical Building Block Function Performance – ZE Devices 62
3.18.1. Pin-to-Pin Performance (LVCMOS25 12 mA Drive) 62
3.18.2. Register-to-Register Performance 62
3.19. Derating Logic Timing 62
3.20. Maximum sysI/O Buffer Performance 63
3.21. MachXO2 External Switching Characteristics – HC/HE Devices 64
3.22. MachXO2 External Switching Characteristics – ZE Devices 75
3.23. sysCLOCK PLL Timing 83
3.24. MachXO2 Oscillator Output Frequency 84
3.25. MachXO2 Standby Mode Timing – HC/HE Devices 84
3.26. MachXO2 Standby Mode Timing – ZE Devices 85
3.27. Flash Download Time 85
3.28. JTAG Port Timing Specifications 86
3.29. sysCONFIG Port Timing Specifications 87
3.30. I2C Port Timing Specifications 88
3.31. SPI Port Timing Specifications 88
3.32. Switching Test Conditions 88
4. Pinout Information 90
4.1. Signal Descriptions 90
4.2. Pinout Information Summary 92
4.3. For Further Information 97
4.4. Thermal Management 97
4.4.1. For Further Information 97
5. Ordering Information 98
5.1. MachXO2 Part Number Description 98
5.2. Ordering Information 99

© 2026 Lattice Semiconductor Corp. All Lattice trademarks, registered trademarks, patents, and disclaimers are as listed at www.latticesemi.com/legal.
All other brand or product names are trademarks or registered trademarks of their respective holders. The specifications and information herein are subject to change without notice.

Downloaded from Arrow.com.

5.2.1. Ultra Low Power Commercial Grade Devices, Halogen Free (RoHS) Packaging 99
5.2.2. High-Performance Commercial Grade Devices with Voltage Regulator, Halogen Free (RoHS) Packaging 101
5.2.3. High-Performance Commercial Grade Devices without Voltage Regulator, Halogen Free (RoHS) Packaging 104
5.2.4. Ultra Low Power Industrial Grade Devices, Halogen Free (RoHS) Packaging 105
5.2.5. High-Performance Industrial Grade Devices with Voltage Regulator, Halogen Free (RoHS) Packaging 108
5.2.6. High Performance Industrial Grade Devices Without Voltage Regulator, Halogen Free (RoHS) Packaging 110
5.2.7. High Performance Automotive Grade Devices Halogen Free (RoHS) Packaging 111
5.3. R1 Device Specifications 112
6. Supplemental Information 113
Technical Support Assistance 114
Revision History 115

© 2026 Lattice Semiconductor Corp. All Lattice trademarks, registered trademarks, patents, and disclaimers are as listed at www.latticesemi.com/legal.
All other brand or product names are trademarks or registered trademarks of their respective holders. The specifications and information herein are subject to change without notice.

Downloaded from Arrow.com.

Figures

Figure 2.1. Top View of the MachXO2-1200 Device 14
Figure 2.2. Top View of the MachXO2-4000 Device 14
Figure 2.3. PFU Block Diagram 15
Figure 2.4. Slice Diagram 16
Figure 2.5. Primary Clocks for MachXO2 Devices 19
Figure 2.6. Secondary High Fanout Nets for MachXO2 Devices 20
Figure 2.7. PLL Diagram 21
Figure 2.8. sysMEM Memory Primitives 24
Figure 2.9. Memory Core Reset 25
Figure 2.10. EBR Asynchronous Reset (Including GSR) Timing Diagram 26
Figure 2.11. Group of Four Programmable I/O Cells 27
Figure 2.12. MachXO2 Input Register Block Diagram (PIO on Left, Top and Bottom Edges) 29
Figure 2.13. MachXO2 Input Register Block Diagram (PIO on Right Edge) 29
Figure 2.14. MachXO2 Output Register Block Diagram (PIO on the Left, Top and Bottom Edges) 30
Figure 2.15. MachXO2 Output Register Block Diagram (PIO on the Right Edges) 31
Figure 2.16. Input Gearbox 32
Figure 2.17. Output Gearbox 34
Figure 2.18. MachXO2-1200U, MachXO2-2000/U, MachXO2-4000 and MachXO2-7000 Banks 39
Figure 2.19. MachXO2-256, MachXO2-640/U and MachXO2-1200 Banks 39
Figure 2.20. MachXO2-256, MachXO2-640/U and MachXO2-1200 Banks 41
Figure 2.21. I2C Core Block Diagram 42
Figure 2.22. SPI Core Block Diagram 43
Figure 2.23. Timer/Counter Block Diagram 44
Figure 3.1. LVDS Using External Resistors (LVDS25E) 57
Figure 3.2. BLVDS Multi-point Output Example 58
Figure 3.3. Differential LVPECL 59
Figure 3.4. RSDS (Reduced Swing Differential Standard) 60
Figure 3.5. Comparator Function Using Referenced Input Buffers 61
Figure 3.6. Receiver RX.CLK.Aligned and MEM DDR Input Waveforms 81
Figure 3.7. Receiver RX.CLK.Centered Waveforms 81
Figure 3.8. Transmitter TX.CLK.Aligned Waveforms 81
Figure 3.9. Transmitter TX.CLK.Centered and MEM DDR Output Waveforms 81
Figure 3.10. GDDR71 Video Timing Waveforms 82
Figure 3.11. Receiver GDDR71_RX. Waveforms 82
Figure 3.12. Transmitter GDDR71_TX. Waveforms 82
Figure 3.13. Standby Mode Timing Waveforms 85
Figure 3.14. JTAG Port Timing Waveforms 86
Figure 3.15. Output Test Load, LVTTL and LVCMOS Standards 88
Figure 5.1. MachXO2 Part Number Description 98

© 2026 Lattice Semiconductor Corp. All Lattice trademarks, registered trademarks, patents, and disclaimers are as listed at www.latticesemi.com/legal.
All other brand or product names are trademarks or registered trademarks of their respective holders. The specifications and information herein are subject to change without notice.

Downloaded from Arrow.com.

Tables

Table 1.1. MachXO2 Family Selection Guide 12
Table 2.1. Resources and Modes Available per Slice 16
Table 2.2. Slice Signal Descriptions 17
Table 2.3. Number of Slices Required For Implementing Distributed RAM[1] 18
Table 2.4. PLL Signal Descriptions 22
Table 2.5. sysMEM Block Configurations 23
Table 2.6. EBR Signal Descriptions 24
Table 2.7. Programmable FIFO Flag Ranges[1] 25
Table 2.8. PIO Signal List[1] 28
Table 2.9. Input Gearbox Signal List 31
Table 2.10. Output Gearbox Signal List 33
Table 2.11. I/O Support Device by Device 37
Table 2.12. Supported Input Standards 37
Table 2.13. Supported Output Standards 38
Table 2.14. Available MCLK Frequencies 40
Table 2.15. Supported Input Standards 42
Table 2.16. SPI Core Signal Description 43
Table 2.17. Timer/Counter Signal Description 44
Table 2.18. MachXO2 Power Saving Features Description 45
Table 3.1. Absolute Maximum Ratings[1, 2, 3] 49
Table 3.2. Recommended Operating Conditions[1] 49
Table 3.3. Power Supply Ramp Rates[1] 49
Table 3.4. Power-On Reset Voltage Levels 50
Table 3.5. Programming/Erase Specifications 50
Table 3.6. Hot Socketing Specifications[1, 2, 3, 4] 50
Table 3.7. DC Electrical Characteristics 51
Table 3.8. Static Supply Current – ZE Devices[1, 2, 3, 6] 52
Table 3.9. Static Power Consumption Contribution of Different Components – ZE Devices 52
Table 3.10. Static Supply Current – HC/HE Devices[1, 2, 3, 6] 53
Table 3.11. Programming and Erase Flash Supply Current – HC/HE Devices[1, 2, 3, 4] 53
Table 3.12. Programming and Erase Flash Supply Current – ZE Devices[1, 2, 3, 4] 54
Table 3.13. sysI/O Recommended Operating Conditions 54
Table 3.14. sysI/O Single-Ended DC Electrical Characteristics[1, 2] 55
Table 3.15. Mixed Voltage LVCMOS Input Standards when V_{CCIO} = 1.5 V 56
Table 3.16. LVDS 57
Table 3.17. LVDS25E DC Conditions 58
Table 3.18. BLVDS DC Conditions[1] 59
Table 3.19. LVPECL DC Conditions[1] 59
Table 3.20. RSDS DC Conditions 60
Table 3.21. Comparator Specifications[1] 61
Table 3.22. Pin-to-Pin Performance (LVCMOS25 12 mA Drive) 61
Table 3.23. Register-to-Register Performance[1] 61
Table 3.24. Pin-to-Pin Performance (LVCMOS25 12 mA Drive) 62
Table 3.25. Register-to-Register Performance[1] 62
Table 3.26. Maximum sysI/O Buffer Performance 63
Table 3.27. MachXO2 External Switching Characteristics – HC/HE Devices[1, 2, 3, 4, 5, 6, 7] 64
Table 3.28. MachXO2 External Switching Characteristics – ZE Devices[1, 2, 3, 4, 5, 6, 7] 75
Table 3.29. sysCLOCK PLL Timing 83
Table 3.30. MachXO2 Oscillator Output Frequency[1] 84
Table 3.31. MachXO2 Standby Mode Timing – HC/HE Devices 84
Table 3.32. MachXO2 Standby Mode Timing – ZE Devices 85
Table 3.33. Flash Download Time 85

© 2026 Lattice Semiconductor Corp. All Lattice trademarks, registered trademarks, patents, and disclaimers are as listed at www.latticesemi.com/legal.
All other brand or product names are trademarks or registered trademarks of their respective holders. The specifications and information herein are subject to change without notice.

Downloaded from Arrow.com.

Table 3.34. JTAG Port Timing Specifications 86
Table 3.35. sysCONFIG Port Timing Specifications 87
Table 3.36. I2C Port Timing Specifications 88
Table 3.37. SPI Port Timing Specifications[1] 88
Table 3.38. Test Fixture Required Components, Non-Terminated Interfaces[1] 89
Table 4.1. Signal Descriptions 90
Table 4.2. MachXO2-256/MachXO2-640/MachXO2-640U Pin Summary 92
Table 4.3. MachXO2-1200/MachXO2-1200U Pin Summary 93
Table 4.4. MachXO2-2000/MachXO2-2000U Pin Summary 94
Table 4.5. MachXO2-4000 Pin Summary 95
Table 4.6. MachXO2-7000 Pin Summary 96
Table 5.1. Ultra Low Power Commercial Grade Devices, Halogen Free (RoHS) Packaging 99
Table 5.2. High-Performance Commercial Grade Devices with Voltage Regulator, Halogen Free (RoHS) Packaging 101
Table 5.3. High-Performance Commercial Grade Devices without Voltage Regulator, Halogen Free (RoHS) Packaging 104
Table 5.4. Ultra Low Power Industrial Grade Devices, Halogen Free (RoHS) Packaging 105
Table 5.5. High-Performance Industrial Grade Devices with Voltage Regulator, Halogen Free (RoHS) Packaging 108
Table 5.6. High Performance Industrial Grade Devices Without Voltage Regulator, Halogen Free (RoHS) Packaging 110
Table 5.7. High Performance Automotive Grade Devices Halogen Free (RoHS) Packaging 111
Table 5.8. R1 Device Specifications 112

© 2026 Lattice Semiconductor Corp. All Lattice trademarks, registered trademarks, patents, and disclaimers are as listed at www.latticesemi.com/legal.
All other brand or product names are trademarks or registered trademarks of their respective holders. The specifications and information herein are subject to change without notice.

Downloaded from Arrow.com.

Acronyms in This Document

A list of acronyms used in this document.

Acronym	Definition
BGA	Ball Grid Array
caBGA	ChipArray Ball Grid Array
CE	Clock Enable
CLK	System clock
CMOS	Complementary Metal Oxide Semiconductor
DDR	Double Data Rate
EBR	Embedded Block RAM
ECLK	Edge Clock
FCIN	Fast Carry In
FCO	Fast Carry Out
I2C	Inter-Integrated Circuit
IP	Intellectual Property
I/O	Input/Output
JTAG	Joint Test Action Group
LED	Light-emitting Diode
LSR	Local Set/Reset
LUT	Look-Up Table
LVCMOS	Low-Voltage CMOS
LVDS	Low-Voltage Differential Signaling
LVPECL	Low-Voltage Positive/Pseudo Emitter-Coupled Logic
LVTTL	Low Voltage Transistor to Transistor Logic
MIPI	Mobile Industry Processor Interface
MLVDS	Multipoint Low-Voltage Differential Signaling
PCI	Peripheral Component Interconnect
PCLK	Primary Clock
PDPR	Pseudo Dual Port RAM
PFU	Programmable Functional Unit
PIC	Programmable Interface Controllers
PIO	Programmed Input/Output
PLD	Programmable Logic Device
PLL	Phase Locked Loop
RAM	Random Access Memory
ROM	Read-only Memory
SDR	Single Data Rate
SHA	Secure Hash Algorithm
SPI	Serial Peripheral Interface
SPR	Single Port Random Access Memory
SRAM	Static Random Access Memory
TransFR™	Transparent Field Reconfiguration
UFM	User Flash Memory
WLCSP	Wafer Level Chip Scale Package

© 2026 Lattice Semiconductor Corp. All Lattice trademarks, registered trademarks, patents, and disclaimers are as listed at www.latticesemi.com/legal.
All other brand or product names are trademarks or registered trademarks of their respective holders. The specifications and information herein are subject to change without notice.

Downloaded from Arrow.com.

1. Introduction

The MachXO2™ family of ultra low power, instant-on, non-volatile PLDs has six devices with densities ranging from 256 to 6864 Look-Up Tables (LUTs). In addition to LUT-based, low-cost programmable logic, these devices feature Embedded Block RAM (EBR), Distributed RAM, User Flash Memory (UFM), Phase Locked Loops (PLLs), pre-engineered source synchronous I/O support, advanced configuration support including dual-boot capability and hardened versions of commonly used functions such as SPI controller, I2C controller and timer/counter. These features allow these devices to be used in low cost, high volume consumer and system applications.

The MachXO2 devices are designed on a 65 nm non-volatile low power process. The device architecture has several features such as programmable low swing differential I/O and the ability to turn off I/O banks, on-chip PLLs and oscillators dynamically. These features help manage static and dynamic power consumption resulting in low static power for all members of the family.

The MachXO2 devices are available in two versions – ultra low power (ZE) and high performance (HC and HE) devices. The ultra low power devices are offered in three speed grades –1, –2 and –3, with –3 being the fastest. Similarly, the high-performance devices are offered in three speed grades: –4, –5 and –6, with –6 being the fastest. HC devices have an internal linear voltage regulator which supports external VCC supply voltages of 3.3 V or 2.5 V. ZE and HE devices only accept 1.2 V as the external VCC supply voltage. With the exception of power supply voltage all three types of devices (ZE, HC and HE) are functionally compatible and pin compatible with each other.

The MachXO2 PLDs are available in a broad range of advanced halogen-free packages ranging from the space saving 2.5 mm x 2.5 mm WLCSP to the 23 mm x 23 mm fpBGA. MachXO2 devices support density migration within the same package. Table 1.1 shows the LUT densities, package and I/O options, along with other key parameters.

The pre-engineered source synchronous logic implemented in the MachXO2 device family supports a broad range of interface standards, including LPDDR, DDR, DDR2 and 7:1 gearing for display I/O.

The MachXO2 devices offer enhanced I/O features such as drive strength control, slew rate control, PCI compatibility, bus-keeper latches, pull-up resistors, pull-down resistors, open drain outputs and hot socketing. Pull-up, pulldown and bus-keeper features are controllable on a “per-pin” basis.

A user-programmable internal oscillator is included in MachXO2 devices. The clock output from this oscillator may be divided by the timer/counter for use as clock input in functions such as LED control, keyboard scanner and similar state machines.

The MachXO2 devices also provide flexible, reliable and secure configuration from on-chip Flash memory. These devices can also configure themselves from external SPI Flash or be configured by an external master through the JTAG test access port or through the I2C port. Additionally, MachXO2 devices support dual-boot capability (using external Flash memory) and remote field upgrade (TransFR) capability.

Lattice provides a variety of design tools that allow complex designs to be efficiently implemented using the MachXO2 family of devices. Popular logic synthesis tools provide synthesis library support for MachXO2. Lattice design tools use the synthesis tool output along with the user-specified preferences and constraints to place and route the design in the MachXO2 device. These tools extract the timing from the routing and back-annotate it into the design for timing verification.

Lattice provides many pre-engineered IP (Intellectual Property) LatticeCORE™ modules, including a number of reference designs licensed free of charge, optimized for the MachXO2 PLD family. By using these configurable soft core IP cores as standardized blocks, users are free to concentrate on the unique aspects of their design, increasing their productivity.

© 2026 Lattice Semiconductor Corp. All Lattice trademarks, registered trademarks, patents, and disclaimers are as listed at www.latticesemi.com/legal.
All other brand or product names are trademarks or registered trademarks of their respective holders. The specifications and information herein are subject to change without notice.

Downloaded from Arrow.com.

1.1. Features

1.1.1. Flexible Logic Architecture

- Six devices with 256 to 6864 LUT4s and 18 to 334 I/O

1.1.2. Ultra Low Power Devices

- Advanced 65 nm low power process
- As low as 22 µW standby power
- Programmable low swing differential I/O
- Stand-by mode and other power saving options

1.1.3. Embedded and Distributed Memory

- Up to 240 kbits sysMEM™ Embedded Block RAM
- Up to 54 kbits Distributed RAM
- Dedicated FIFO control logic

1.1.4. On-Chip User Flash Memory

- Up to 256 kbits of User Flash Memory
- 100,000 write cycles
- Accessible through WISHBONE, SPI, I2C and JTAG interfaces
- Can be used as soft processor PROM or as Flash memory

1.1.5. Pre-Engineered Source Synchronous I/O

- DDR registers in I/O cells
- Dedicated gearing logic
- 7:1 Gearing for Display I/O
- Generic DDR, DDRX2, DDRX4
- Dedicated DDR/DDR2/LPDDR memory with DQS support

1.1.6. High Performance, Flexible I/O Buffer

- Programmable sysI/O™ buffer supports wide range of interfaces:
  - LVCMOS 3.3/2.5/1.8/1.5/1.2
  - LVTTL
  - PCI
  - LVDS, Bus-LVDS, MLVDS, RSDS, LVPECL
  - SSTL 25/18
  - HSTL 18
  - MIPI D-PHY Emulated
  - Schmitt trigger inputs, up to 0.5 V hysteresis
  - I/O support hot socketing
  - On-chip differential termination
  - Programmable pull-up or pull-down mode

1.1.7. Flexible On-Chip Clocking

- Eight primary clocks
- Up to two edge clocks for high-speed I/O interfaces (top and bottom sides only)
- Up to two analog PLLs per device with fractional-n frequency synthesis
  - Wide input frequency range (7 MHz to 400 MHz)

1.1.8. Non-volatile, Infinitely Reconfigurable

- Instant-on – powers up in microseconds
- Single-chip, secure solution
- Programmable through JTAG, SPI or I2C
- Supports background programming of non-volatile memory
- Optional dual boot with external SPI memory

1.1.9. TransFR™ Reconfiguration

- In-field logic update while system operates

1.1.10. Enhanced System Level Support

- On-chip hardened functions: SPI, I2C, timer/counter
- On-chip oscillator with 5.5% accuracy
- Unique TraceID for system tracking
- One Time Programmable (OTP) mode
- Single power supply with extended operating range
- IEEE Standard 1149.1 boundary scan
- IEEE 1532 compliant in-system programming

1.1.11. Broad Range of Package Options

- TQFP, WLCSP, ucBGA, csBGA, caBGA, ftBGA, fpBGA, QFN package options
- Small footprint package options
  - As small as 2.5 mm x 2.5 mm
- Density migration supported
- Advanced halogen-free packaging

1.1.12. Application

- Consumer electronics
- Compute and storage
- Wireless communications
- Industrial control systems
- Automotive system

© 2026 Lattice Semiconductor Corp. All Lattice trademarks, registered trademarks, patents, and disclaimers are as listed at www.latticesemi.com/legal.
All other brand or product names are trademarks or registered trademarks of their respective holders. The specifications and information herein are subject to change without notice.

Downloaded from Arrow.com.

Table 1.1. MachXO2 Family Selection Guide

		XO2-256	XO2-640	XO2-640U[1]	XO2-1200	XO2-1200U[1]	XO2-2000	XO2-2000U[1]	XO2-4000	XO2-7000
LUTs		256	640	640	1280	1280	2112	2112	4320	6864
Distributed RAM (kbits)		2	5	5	10	10	16	16	34	34
EBR SRAM (Kbits)		0	18	64	64	74	74	92	92	240
Number of EBR SRAM Blocks (9 Kbits)		0	2	7	7	8	8	10	10	26
UFM (kbits)		0	24	64	64	80	80	96	96	256
Device Options:	HC[2]	Yes	Yes	Yes	Yes	Yes	Yes	Yes	Yes	Yes
	HE[3]	—	—	—	—	—	Yes	Yes	Yes	Yes
	ZE[4]	Yes	Yes	—	Yes	—	Yes	—	Yes	Yes
Number of PLLs		0	0	1	1	1	1	2	2	2
Hardened Functions	I2C	2	2	2	2	2	2	2	2	2
	SPI	1	1	1	1	1	1	1	1	1
	Timer/Counter	1	1	1	1	1	1	1	1	1
Automotive Qualified		XO2-256	XO2-640	—	—	—	—	—	—	—
Packages						**I/O**				
25-ball WLCSP[5] (2.5 mm x 2.5 mm, 0.4 mm)					18					
32 QFN[6] (5 mm x 5 mm, 0.5 mm)		21			21					
36-ball WLCSP[5] (2.5 mm x 2.5 mm, 0.4 mm)					28					
48 QFN[8] (7 mm x 7 mm, 0.5 mm)		40	40							
49-ball WLCSP[5] (3.2 mm x 3.2 mm, 0.4 mm)							38			
64-ball ucBGA (4 mm x 4 mm, 0.4 mm)		44								
81-ball WLCSP[5] (3.8 mm x 3.8 mm, 0.4 mm)									63	
84 QFN[7] (7 mm x 7 mm, 0.5 mm)									68	
100-pin TQFP (14 mm x 14 mm)		55[9]	78[9]		79		79			
132-ball csBGA (8 mm x 8 mm, 0.5 mm)		55[9]	79[9]		104		104		104	
144-pin TQFP (20 mm x 20 mm)				107	107		111		115	115
184-ball csBGA[7] (8 mm x 8 mm, 0.5 mm)									150	
256-ball caBGA (14 mm x 14 mm, 0.8 mm)							206		206	206
256-ball ftBGA (17 mm x 17 mm, 1.0 mm)						206	206		206	206
332-ball caBGA (17 mm x 17 mm, 0.8 mm)									274	278
484-ball ftBGA (23 mm x 23 mm, 1.0 mm)								278	278	334

© 2026 Lattice Semiconductor Corp. All Lattice trademarks, registered trademarks, patents, and disclaimers are as listed at www.latticesemi.com/legal.
All other brand or product names are trademarks or registered trademarks of their respective holders. The specifications and information herein are subject to change without notice.

Downloaded from Arrow.com.

Notes:

1. Ultra high I/O device.
2. High performance with regulator – VCC = 2.5 V, 3.3 V
3. High performance without regulator – VCC = 1.2 V
4. Low power without regulator – VCC = 1.2 V
5. WLCSP package only available for ZE devices.
6. 32 QFN package only available for HC and ZE devices.
7. 184 csBGA package only available for HE devices.
8. 48 QFN package only available for HC devices.
9. Package is available for automotive devices.

© 2026 Lattice Semiconductor Corp. All Lattice trademarks, registered trademarks, patents, and disclaimers are as listed at www.latticesemi.com/legal.
All other brand or product names are trademarks or registered trademarks of their respective holders. The specifications and information herein are subject to change without notice.

Downloaded from Arrow.com.

2. Architecture

2.1. Architecture Overview

The MachXO2 family architecture contains an array of logic blocks surrounded by Programmable I/O (PIO). The larger logic density devices in this family have sysCLOCK™ PLLs and blocks of sysMEM Embedded Block RAM (EBRs). Figure 2.1 and Figure 2.2 show the block diagrams of the various family members.

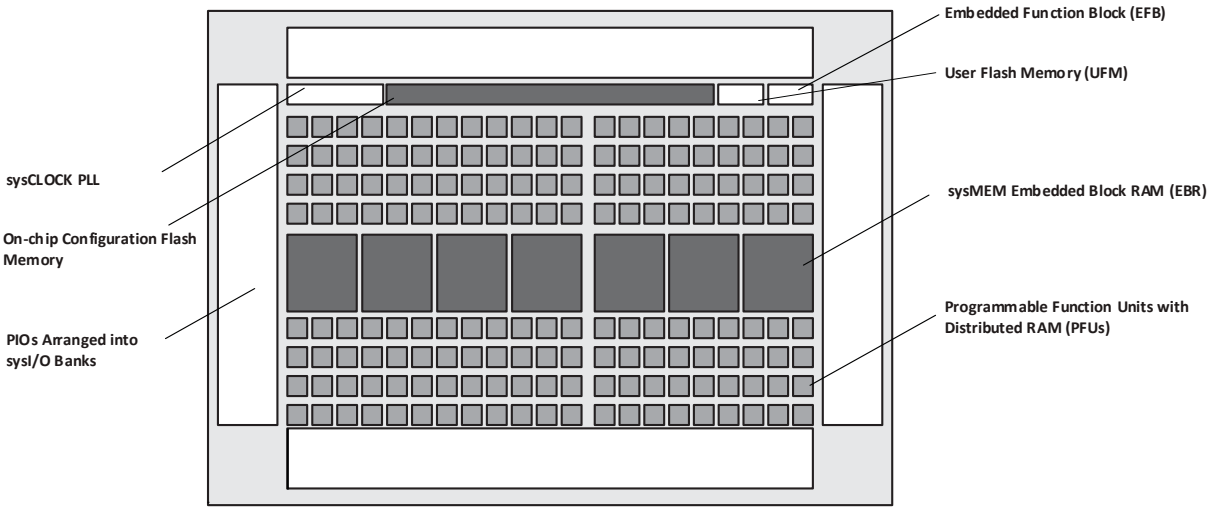

Note: MachXO2-256, and MachXO2-640/U are similar to MachXO2-1200. MachXO2-256 has a lower LUT count and no PLL or EBR blocks. MachXO2-640 has no PLL, a lower LUT count and two EBR blocks. MachXO2-640U has a lower LUT count, one PLL and seven EBR blocks.

Figure 2.1. Top View of the MachXO2-1200 Device

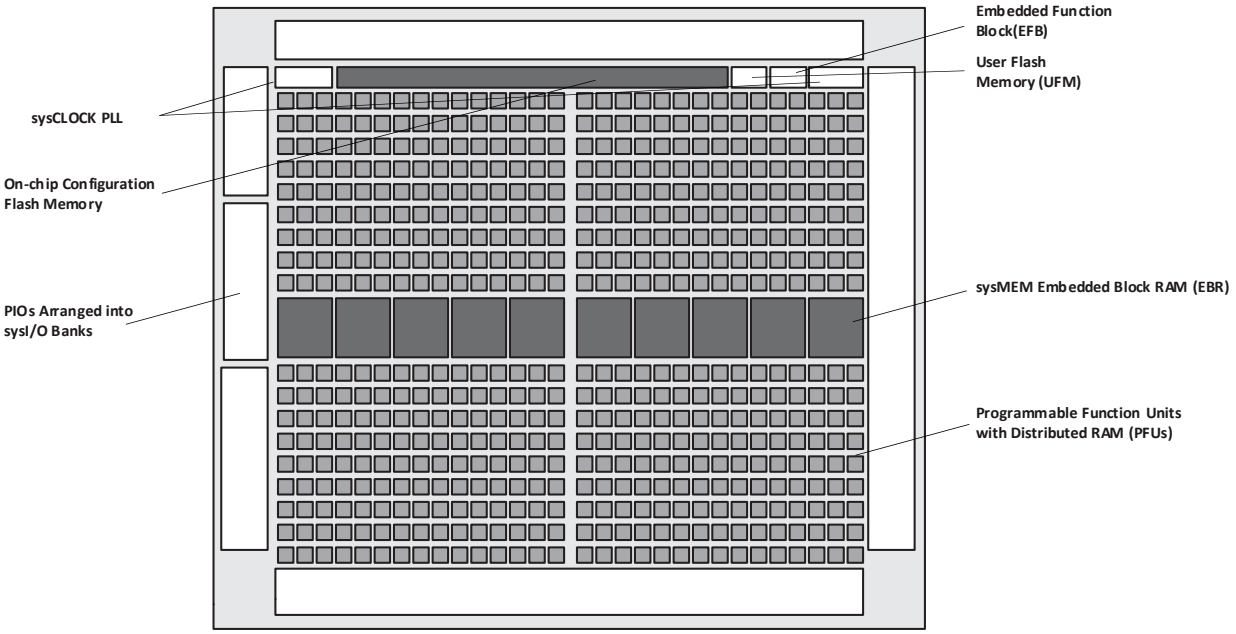

Note: MachXO2-1200U, MachXO2-2000/U and MachXO2-7000 are similar to MachXO2-4000. MachXO2-1200U and MachXO2-2000 have a lower LUT count, one PLL, and eight EBR blocks. MachXO2-2000U has a lower LUT count, two PLLs, and 10 EBR blocks. MachXO2-7000 has a higher LUT count, two PLLs, and 26 EBR blocks.

Figure 2.2. Top View of the MachXO2-4000 Device

© 2026 Lattice Semiconductor Corp. All Lattice trademarks, registered trademarks, patents, and disclaimers are as listed at www.latticesemi.com/legal.
All other brand or product names are trademarks or registered trademarks of their respective holders. The specifications and information herein are subject to change without notice.

Downloaded from Arrow.com.

The logic blocks, Programmable Functional Unit (PFU) and sysMEM EBR blocks, are arranged in a two-dimensional grid with rows and columns. Each row has either the logic blocks or the EBR blocks. The PIO cells are located at the periphery of the device, arranged in banks. The PFU contains the building blocks for logic, arithmetic, RAM, ROM, and register functions. The PIOs utilize a flexible I/O buffer referred to as a sysI/O buffer that supports operation with a variety of interface standards. The blocks are connected with many vertical and horizontal routing channel resources. The place and route software tool automatically allocates these routing resources.

In the MachXO2 family, the number of sysI/O banks varies by device. There are different types of I/O buffers on the different banks. Refer to the details in later sections of this document. The sysMEM EBRs are large, dedicated fast memory blocks; these blocks are found in MachXO2-640/U and larger devices. These blocks can be configured as RAM, ROM or FIFO. FIFO support includes dedicated FIFO pointer and flag “hard” control logic to minimize LUT usage.

The MachXO2 registers in PFU and sysI/O can be configured to be SET or RESET. After power-up and device is configured, the device enters into user mode with these registers SET/RESET according to the configuration setting, allowing device entering to a known state for predictable system function.

The MachXO2 architecture also provides up to two sysCLOCK Phase Locked Loop (PLL) blocks on MachXO2- 640U, MachXO2-1200/U and larger devices. These blocks are located at the ends of the on-chip Flash block. The PLLs have multiply, divide, and phase shifting capabilities that are used to manage the frequency and phase relationships of the clocks.

MachXO2 devices provide commonly used hardened functions such as SPI controller, I2C controller and timer/ counter. MachXO2-640/U and higher density devices also provide User Flash Memory (UFM). These hardened functions and the UFM interface to the core logic and routing through a WISHBONE interface. The UFM can also be accessed through the SPI, I2C and JTAG ports.

Every device in the family has a JTAG port that supports programming and configuration of the device as well as access to the user logic. The MachXO2 devices are available for operation from 3.3 V, 2.5 V and 1.2 V power supplies, providing easy integration into the overall system.

2.2. PFU Blocks

The core of the MachXO2 device consists of PFU blocks, which can be programmed to perform logic, arithmetic, distributed RAM and distributed ROM functions. Each PFU block consists of four interconnected slices numbered 0 to 3 as shown in Figure 2.3. Each slice contains two LUTs and two registers. There are 53 inputs and 25 outputs associated with each PFU block.

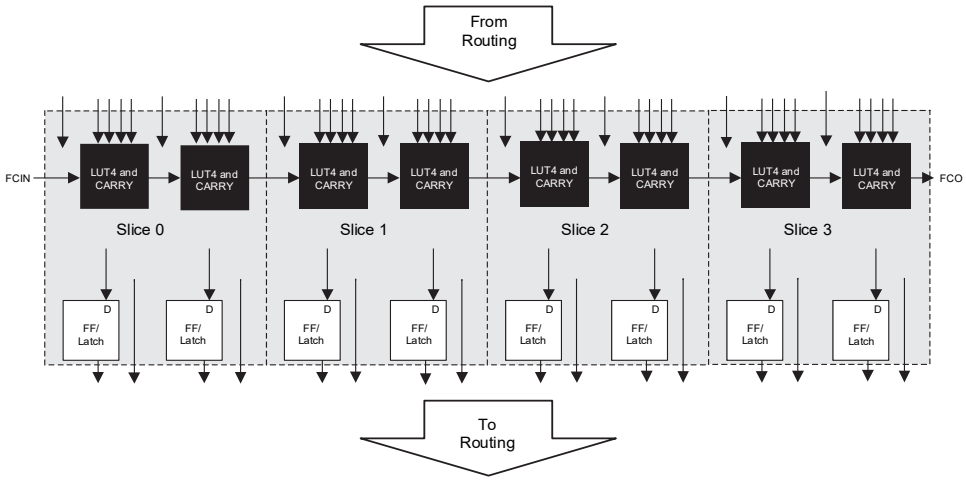

Figure 2.3. PFU Block Diagram

© 2026 Lattice Semiconductor Corp. All Lattice trademarks, registered trademarks, patents, and disclaimers are as listed at www.latticesemi.com/legal.
All other brand or product names are trademarks or registered trademarks of their respective holders. The specifications and information herein are subject to change without notice.

Downloaded from Arrow.com.

2.2.1. Slices

Slices 0-3 contain two LUT4s feeding two registers. Slices 0-2 can be configured as distributed memory. Table 2.1 shows the capability of the slices in PFU blocks along with the operation modes they enable. In addition, each PFU contains logic that allows the LUTs to be combined to perform functions such as LUT5, LUT6, LUT7 and LUT8. The control logic performs set/reset functions (programmable as synchronous/ asynchronous), clock select, chipselect and wider RAM/ROM functions.

Table 2.1. Resources and Modes Available per Slice

Slice	PFU Block	
	Resources	Modes
Slice 0	2 LUT4s and 2 Registers	Logic, Ripple, RAM, ROM
Slice 1	2 LUT4s and 2 Registers	Logic, Ripple, RAM, ROM
Slice 2	2 LUT4s and 2 Registers	Logic, Ripple, RAM, ROM
Slice 3	2 LUT4s and 2 Registers	Logic, Ripple, ROM

Figure 2.4 shows an overview of the internal logic of the slice. The registers in the slice can be configured for positive/ negative and edge triggered or level sensitive clocks. All slices have 15 inputs from routing and one from the carry-chain (from the adjacent slice or PFU). There are seven outputs: six for routing and one to carry-chain (to the adjacent PFU). Table 2.2 lists the signals associated with Slices 0-3.

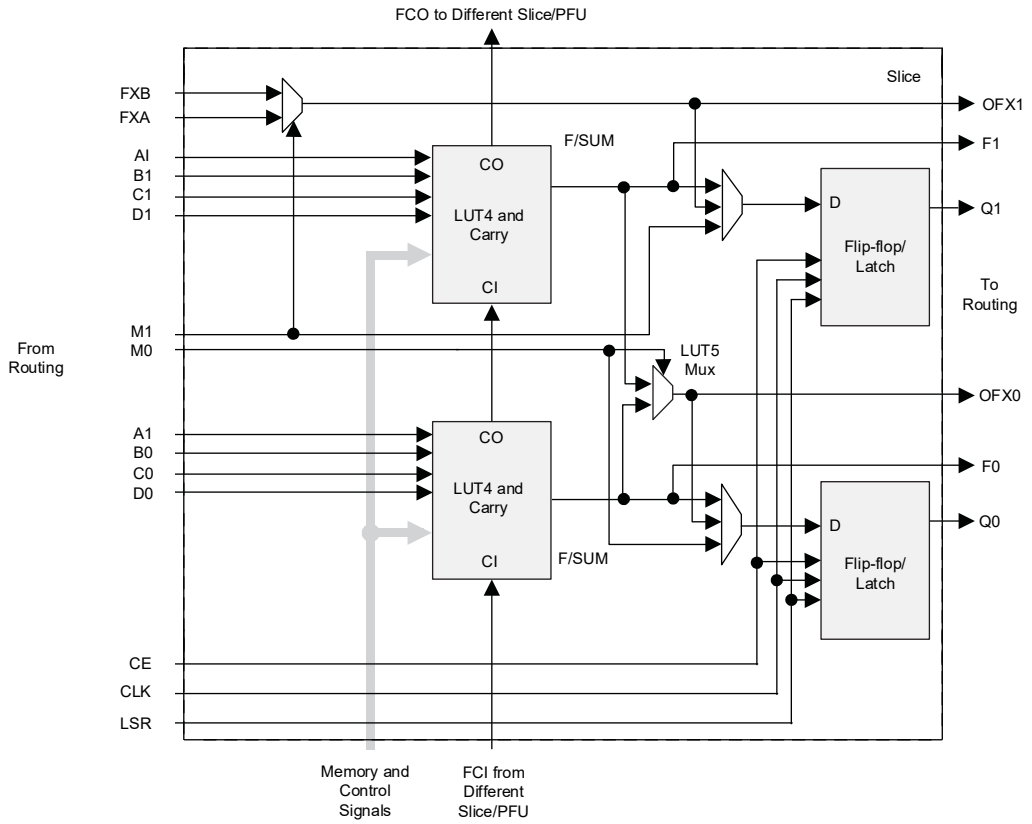

For Slice 0 and 1, memory control signals are generated from Slice 2 as follows:
- WCK is CLK
- WRE is from LSR
- DI[3:2] for Slice 1 and D1[1:0] for Slice 0 data from Slice 2
- WAD [A:D] is a 4-bit address from Slice 2 LUT input

Figure 2.4. Slice Diagram

© 2026 Lattice Semiconductor Corp. All Lattice trademarks, registered trademarks, patents, and disclaimers are as listed at www.latticesemi.com/legal.
All other brand or product names are trademarks or registered trademarks of their respective holders. The specifications and information herein are subject to change without notice.

Downloaded from Arrow.com.

Table 2.2. Slice Signal Descriptions

Function	Type	Signal Names	Description
Input	Data signal	A0, B0, C0, D0	Inputs to LUT4
Input	Data signal	A1, B1, C1, D1	Inputs to LUT4
Input	Multi-purpose	M0/M1	Multipurpose Input
Input	Control signal	CE	Clock Enable
Input	Control signal	LSR	Local Set/Reset
Input	Control signal	CLK	System Clock
Input	Inter-PFU signal	FCIN	Fast Carry In[1]
Output	Data signals	F0, F1	LUT4 output register bypass signals
Output	Data signals	Q0, Q1	Register Outputs
Output	Data signals	OFX0	Output of a LUT5 MUX
Output	Data signals	OFX1	Output of a LUT6, LUT7, LUT8[2] MUX depending on the Slice
Output	Inter-PFU signal	FCO	Fast Carry Out[1]

Notes:

1. See Figure 2.3 for connection details.
2. Requires two PFUs.

2.2.2. Modes of Operation

Each slice has up to four potential modes of operation: Logic, Ripple, RAM and ROM.

Logic Mode

In this mode, the LUTs in each slice are configured as 4-input combinatorial lookup tables. A LUT4 can have 16 possible input combinations. Any four input logic functions can be generated by programming this lookup table. Since there are two LUT4s per slice, a LUT5 can be constructed within one slice. Larger look-up tables such as LUT6, LUT7 and LUT8 can be constructed by concatenating other slices. Note LUT8 requires more than four slices.

Ripple Mode

Ripple mode supports the efficient implementation of small arithmetic functions. In Ripple mode, the following functions can be implemented by each slice:

- Addition 2-bit
- Subtraction 2-bit
- Add/subtract 2-bit using dynamic control
- Up counter 2-bit
- Down counter 2-bit
- Up/down counter with asynchronous clear
- Up/down counter with preload (sync)
- Ripple mode multiplier building block
- Multiplier support
- Comparator functions of A and B inputs
- A greater-than-or-equal-to B
- A not-equal-to B
- A less-than-or-equal-to B

Ripple mode includes an optional configuration that performs arithmetic using fast carry chain methods. In this configuration (also referred to as CCU2 mode) two additional signals, Carry Generate and Carry Propagate, are generated on a per-slice basis to allow fast arithmetic functions to be constructed by concatenating slices.

© 2026 Lattice Semiconductor Corp. All Lattice trademarks, registered trademarks, patents, and disclaimers are as listed at www.latticesemi.com/legal.
All other brand or product names are trademarks or registered trademarks of their respective holders. The specifications and information herein are subject to change without notice.

Downloaded from Arrow.com.

2.2.3. RAM Mode

In this mode, a 16x4-bit distributed single port RAM (SPR) can be constructed by using each LUT block in Slice 0 and Slice 1 as a 16x1-bit memory. Slice 2 is used to provide memory address and control signals. MachXO2 devices support distributed memory initialization.

The Lattice design tools support the creation of a variety of different size memories. Where appropriate, the software constructs these using distributed memory primitives that represent the capabilities of the PFU. Table 2.3 shows the number of slices required to implement different distributed RAM primitives. For more information about using RAM in MachXO2 devices, see Memory Usage Guide for MachXO2 Devices (FPGA-TN-02159).

Table 2.3. Number of Slices Required For Implementing Distributed RAM[1]

	SPR 16x4	PDPR 16x4
Number of Slices	3	3

Note:

1. SPR = Single Port RAM, PDPR = Pseudo Dual Port RAM

2.2.4. ROM Mode

ROM mode uses the LUT logic; hence, slices 0-3 can be used in ROM mode. Preloading is accomplished through the programming interface during PFU configuration.

For more information on the RAM and ROM modes, refer to Memory Usage Guide for MachXO2 Devices (FPGA-TN-02159).

2.3. Routing

There are many resources provided in the MachXO2 devices to route signals individually or as buses with related control signals. The routing resources consist of switching circuitry, buffers and metal interconnect (routing) segments.

The inter-PFU connections are made with three different types of routing resources: x1 (spans two PFUs), x2 (spans three PFUs) and x6 (spans seven PFUs). The x1, x2, and x6 connections provide fast and efficient connections in the horizontal and vertical directions.

The design tools take the output of the synthesis tool and places and routes the design. Generally, the place and route tool is completely automatic, although an interactive routing editor is available to optimize the design.

2.4. Clock/Control Distribution Network

Each MachXO2 device has eight clock inputs (PCLK [T, C] [Banknum]_[2..0]) – three pins on the left side, two pins each on the bottom and top sides and one pin on the right side. These clock inputs drive the clock nets. These eight inputs can be differential or single-ended and may be used as general purpose I/O if they are not used to drive the clock nets. When using a single ended clock input, only the PCLKT input can drive the clock tree directly.

The MachXO2 architecture has three types of clocking resources: edge clocks, primary clocks and secondary high fanout nets. MachXO2-640U, MachXO2-1200/U and higher density devices have two edge clocks each on the top and bottom edges. Lower density devices have no edge clocks. Edge clocks are used to clock I/O registers and have low injection time and skew. Edge clock inputs are from PLL outputs, primary clock pads, edge clock bridge outputs and CIB sources.

The eight primary clock lines in the primary clock network drive throughout the entire device and can provide clocks for all resources within the device including PFUs, EBRs and PICs. In addition to the primary clock signals, MachXO2 devices also have eight secondary high fanout signals which can be used for global control signals, such as clock enables, synchronous or asynchronous clears, presets, output enables, and so on. Internal logic can drive the global clock network for internally-generated global clocks and control signals.

The maximum frequency for the primary clock network is shown in the MachXO2 External Switching Characteristics table.

© 2026 Lattice Semiconductor Corp. All Lattice trademarks, registered trademarks, patents, and disclaimers are as listed at www.latticesemi.com/legal.
All other brand or product names are trademarks or registered trademarks of their respective holders. The specifications and information herein are subject to change without notice.

Downloaded from Arrow.com.

The primary clock signals for the MachXO2-256 and MachXO2-640 are generated from eight 17:1 muxes. The available clock sources include eight I/O sources and 9 routing inputs. Primary clock signals for the MachXO2-640U, MachXO2-1200/U and larger devices are generated from eight 27:1 muxes. The available clock sources include eight I/O sources, 11 routing inputs, eight clock divider inputs and up to eight sysCLOCK PLL outputs.

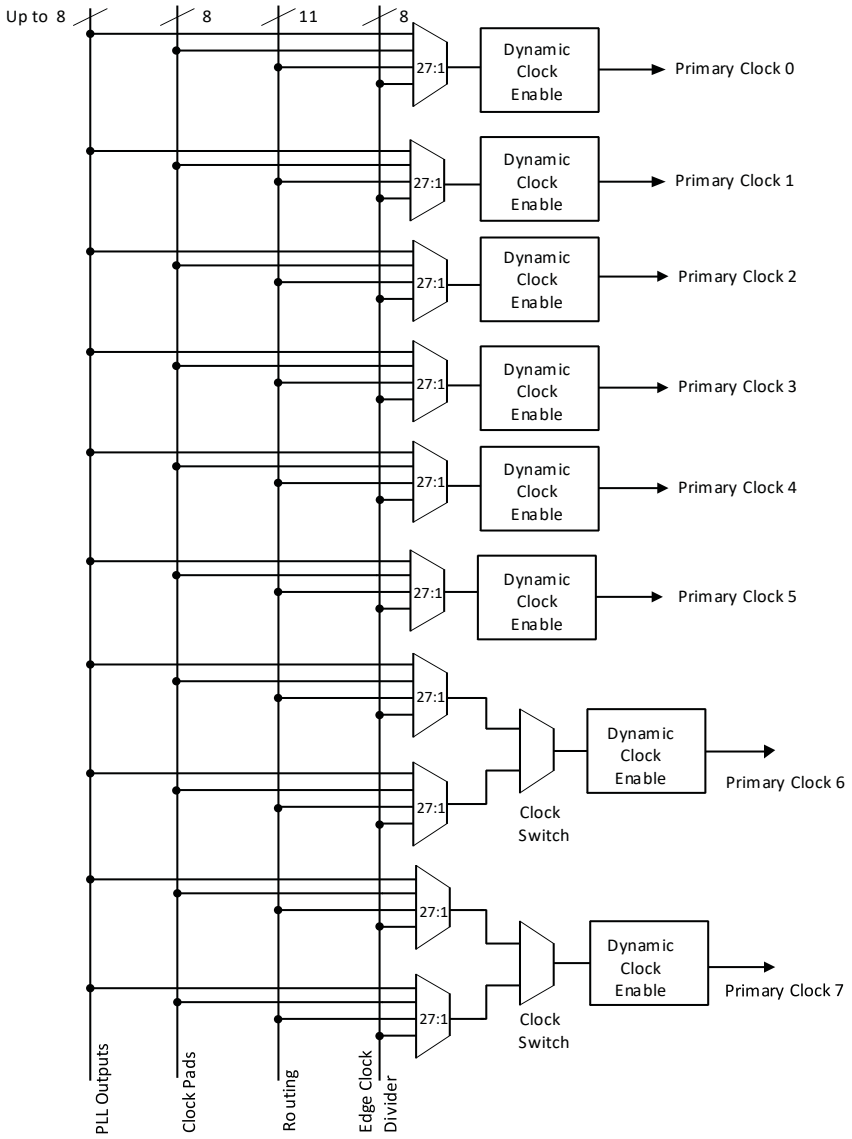

Primary clocks for MachXO2-640U, MachXO2-1200/U and larger devices.

Note: MachXO2-640 and smaller devices do not have inputs from the Edge Clock Divider or PLL and fewer routing inputs. These devices have 17:1 muxes instead of 27:1 muxes.

Figure 2.5. Primary Clocks for MachXO2 Devices

Eight secondary high fanout nets are generated from eight 8:1 muxes, as shown in Figure 2.6. One of the eight inputs to the secondary high fanout net input mux comes from dual function clock pins and the remaining seven come from internal routing. The maximum frequency for the secondary clock network is shown in Table 3.27.

© 2026 Lattice Semiconductor Corp. All Lattice trademarks, registered trademarks, patents, and disclaimers are as listed at www.latticesemi.com/legal.
All other brand or product names are trademarks or registered trademarks of their respective holders. The specifications and information herein are subject to change without notice.

Downloaded from Arrow.com.

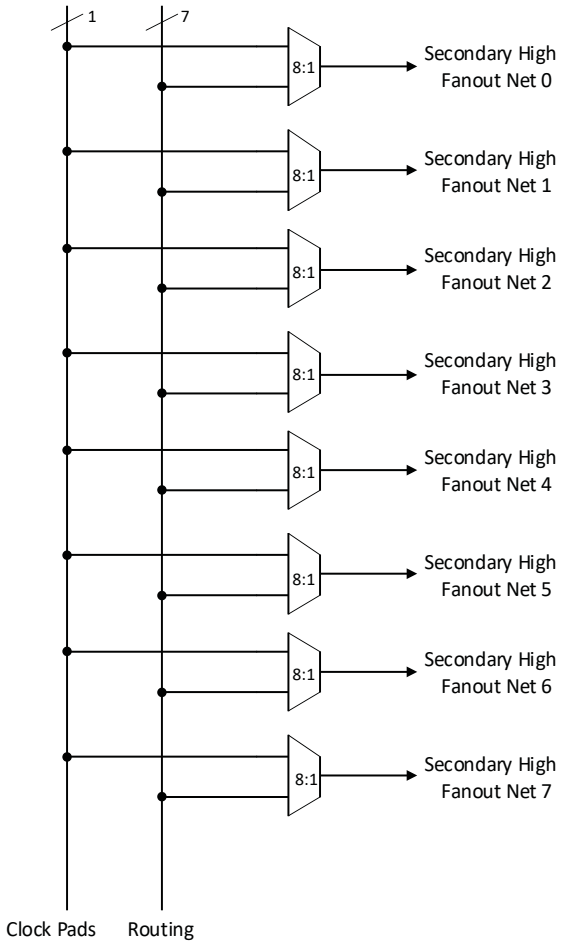

Figure 2.6. Secondary High Fanout Nets for MachXO2 Devices

2.4.1. sysCLOCK Phase Locked Loops (PLLs)

The sysCLOCK PLLs provide the ability to synthesize clock frequencies. The MachXO2-640U, MachXO2-1200/U and larger devices have one or more sysCLOCK PLL. CLKI is the reference frequency input to the PLL and its source can come from an external I/O pin or from internal routing. CLKFB is the feedback signal to the PLL which can come from internal routing or an external I/O pin. The feedback divider is used to multiply the reference frequency and thus synthesize a higher frequency clock output.

The MachXO2 sysCLOCK PLLs support high resolution (16-bit) fractional-N synthesis. Fractional-N frequency synthesis allows the user to generate an output clock which is a non-integer multiple of the input frequency. For more information about using the PLL with Fractional-N synthesis, see MachXO2 sysCLOCK PLL Design and Usage Guide (FPGA-TN-02157).

Each output has its own output divider, thus allowing the PLL to generate different frequencies for each output. The output dividers can have a value from 1 to 128. The output dividers may also be cascaded together to generate low frequency clocks. The CLKOP, CLKOS, CLKOS2, and CLKOS3 outputs can all be used to drive the MachXO2 clock distribution network directly or general purpose routing resources can be used.

The LOCK signal is asserted when the PLL determines it has achieved lock and de-asserted if a loss of lock is detected. A block diagram of the PLL is shown in Figure 2.7.

The setup and hold times of the device can be improved by programming a phase shift into the CLKOS, CLKOS2, and CLKOS3 output clocks which advance or delay the output clock with reference to the CLKOP output clock.

This phase shift can be either programmed during configuration or can be adjusted dynamically. In dynamic mode, the PLL may lose lock after a phase adjustment on the output used as the feedback source and not relock until the tLOCK parameter has been satisfied.

© 2026 Lattice Semiconductor Corp. All Lattice trademarks, registered trademarks, patents, and disclaimers are as listed at www.latticesemi.com/legal.
All other brand or product names are trademarks or registered trademarks of their respective holders. The specifications and information herein are subject to change without notice.

Downloaded from Arrow.com.

The MachXO2 also has a feature that allows the user to select between two different reference clock sources dynamically. This feature is implemented using the PLLREFCS primitive. The timing parameters for the PLL are shown in the sysCLOCK PLL Timing table.

The MachXO2 PLL contains a WISHBONE port feature that allows the PLL settings, including divider values, to be dynamically changed from the user logic. When using this feature the EFB block must also be instantiated in the design to allow access to the WISHBONE ports. Similar to the dynamic phase adjustment, when PLL settings are updated through the WISHBONE port the PLL may lose lock and not relock until the tLOCK parameter has been satisfied. The timing parameters for the PLL are shown in the sysCLOCK PLL Timing table.

For more details on the PLL and the WISHBONE interface, see MachXO2 sysCLOCK PLL Design and Usage Guide (FPGA-TN-02157).

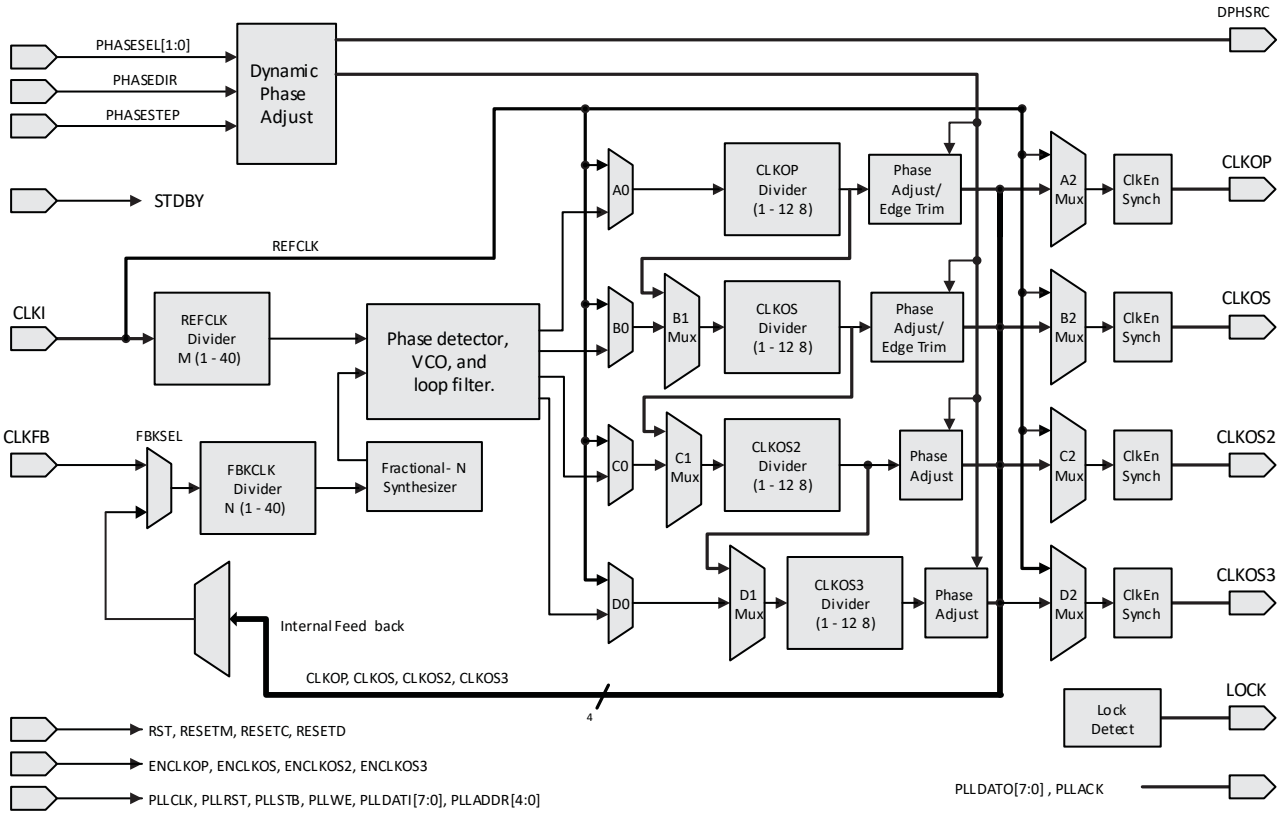

Figure 2.7. PLL Diagram

Table 2.4 provides signal descriptions of the PLL block.

© 2026 Lattice Semiconductor Corp. All Lattice trademarks, registered trademarks, patents, and disclaimers are as listed at www.latticesemi.com/legal.
All other brand or product names are trademarks or registered trademarks of their respective holders. The specifications and information herein are subject to change without notice.

Downloaded from Arrow.com.

Table 2.4. PLL Signal Descriptions

Port Name	I/O	Description
CLKI	I	Input clock to PLL
CLKFB	I	Feedback clock
PHASESEL[1:0]	I	Select which output is affected by Dynamic Phase adjustment ports
PHASEDIR	I	Dynamic Phase adjustment direction
PHASESTEP	I	Dynamic Phase step – toggle shifts VCO phase adjust by one step.
CLKOP	O	Primary PLL output clock (with phase shift adjustment)
CLKOS	O	Secondary PLL output clock (with phase shift adjust)
CLKOS2	O	Secondary PLL output clock2 (with phase shift adjust)
CLKOS3	O	Secondary PLL output clock3 (with phase shift adjust)
LOCK	O	PLL LOCK, asynchronous signal. Active high indicates PLL is locked to input and feedback signals.
DPHSRC	O	Dynamic Phase source – ports or WISHBONE is active
STDBY	I	Standby signal to power down the PLL
RST	I	PLL reset without resetting the M-divider. Active high reset.
RESETM	I	PLL reset - includes resetting the M-divider. Active high reset.
RESETC	I	Reset for CLKOS2 output divider only. Active high reset.
RESETD	I	Reset for CLKOS3 output divider only. Active high reset.
ENCLKOP	I	Enable PLL output CLKOP
ENCLKOS	I	Enable PLL output CLKOS when port is active
ENCLKOS2	I	Enable PLL output CLKOS2 when port is active
ENCLKOS3	I	Enable PLL output CLKOS3 when port is active
PLLCLK	I	PLL data bus clock input signal
PLLRST	I	PLL data bus reset. This resets only the data bus not any register values.
PLLSTB	I	PLL data bus strobe signal
PLLWE	I	PLL data bus write enable signal
PLLADDR [4:0]	I	PLL data bus address
PLLDATI [7:0]	I	PLL data bus data input
PLLDATO [7:0]	O	PLL data bus data output
PLLACK	O	PLL data bus acknowledge signal

© 2026 Lattice Semiconductor Corp. All Lattice trademarks, registered trademarks, patents, and disclaimers are as listed at www.latticesemi.com/legal.
All other brand or product names are trademarks or registered trademarks of their respective holders. The specifications and information herein are subject to change without notice.

Downloaded from Arrow.com.

2.5. sysMEM Embedded Block RAM Memory

The MachXO2-640/U and larger devices contain sysMEM Embedded Block RAMs (EBRs). The EBR consists of a 9-kbit RAM, with dedicated input and output registers. This memory can be used for a wide variety of purposes including data buffering, PROM for the soft processor and FIFO.

sysMEM Memory Block

The sysMEM block can implement single port, dual port, pseudo dual port, or FIFO memories. Each block can be used in a variety of depths and widths as shown in Table 2.5.

Table 2.5. sysMEM Block Configurations

Memory Mode	Configurations
Single Port	8,192 x 1 4,096 x 2 2,048 x 4 1,024 x 9
True Dual Port	8,192 x 1 4,096 x 2 2,048 x 4 1,024 x 9
Pseudo Dual Port	8,192 x 1 4,096 x 2 2,048 x 4 1,024 x 9 512 x 18
FIFO	8,192 x 1 4,096 x 2 2,048 x 4 1,024 x 9 512 x 18

Bus Size Matching

All the multi-port memory modes support different widths on each of the ports. The RAM bits are mapped LSB word 0 to MSB word 0, LSB word 1 to MSB word 1, and so on. Although the word size and number of words for each port varies, this mapping scheme applies to each port.

RAM Initialization and ROM Operation

If desired, the contents of the RAM can be pre-loaded during device configuration. EBR initialization data can be loaded from the UFM. To maximize the number of UFM bits, initialize the EBRs used in your design to an all-zero pattern. Initializing to an all-zero pattern does not use up UFM bits. MachXO2 devices have been designed such that multiple EBRs share the same initialization memory space if they are initialized to the same pattern.

By preloading the RAM block during the chip configuration cycle and disabling the write controls, the sysMEM block can also be utilized as a ROM.

Memory Cascading

Larger and deeper blocks of RAM can be created using EBR sysMEM Blocks. Typically, the Lattice design tools cascade memory transparently, based on specific design inputs.

Single, Dual, Pseudo-Dual Port and FIFO Modes

Figure 2.8 shows the five basic memory configurations and their input/output names. In all the sysMEM RAM modes, the input data and addresses for the ports are registered at the input of the memory array. The output data of the memory is optionally registered at the memory array output.

© 2026 Lattice Semiconductor Corp. All Lattice trademarks, registered trademarks, patents, and disclaimers are as listed at www.latticesemi.com/legal.
All other brand or product names are trademarks or registered trademarks of their respective holders. The specifications and information herein are subject to change without notice.

Downloaded from Arrow.com.

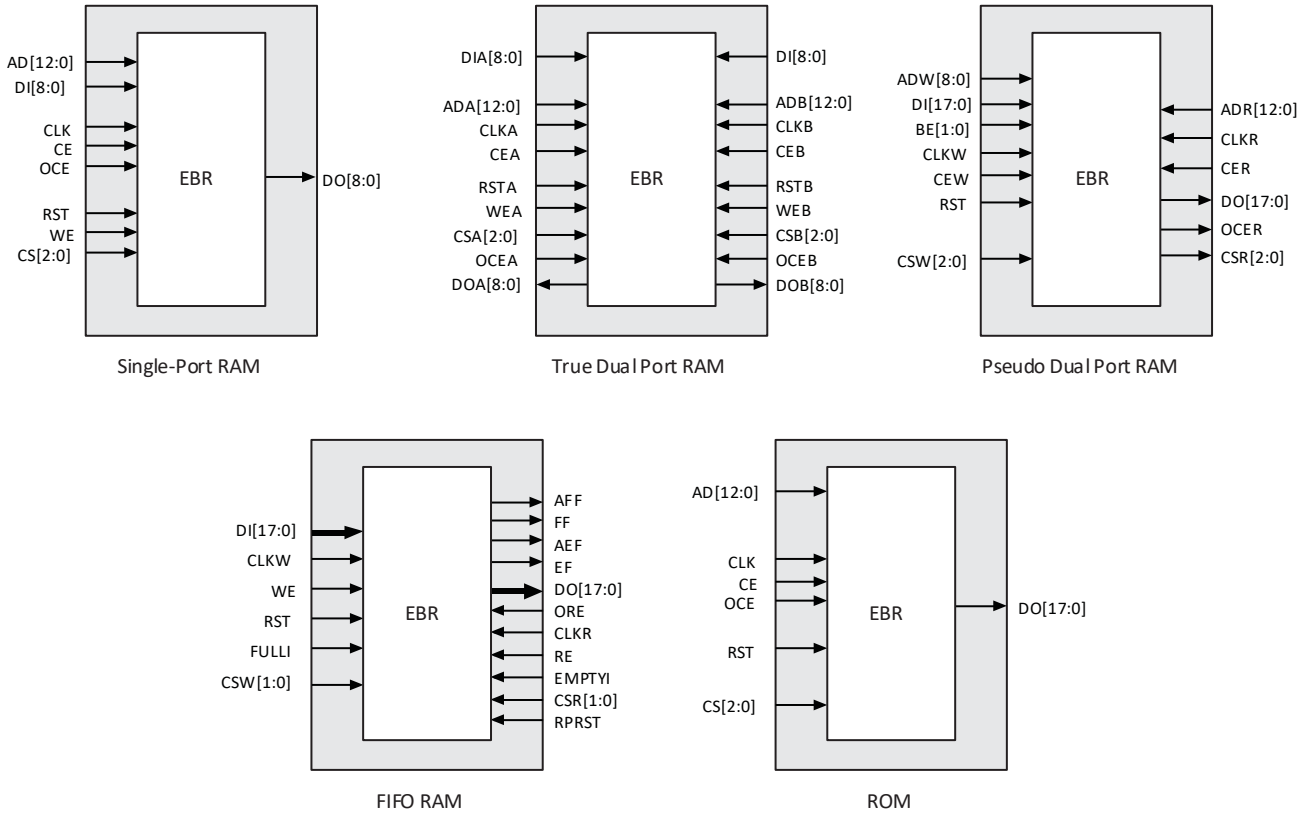

Figure 2.8. sysMEM Memory Primitives

Table 2.6. EBR Signal Descriptions

Port Name	Description	Active State
CLK	Clock	Rising Clock Edge
CE	Clock Enable	Active High
OCE1	Output Clock Enable	Active High
RST	Reset	Active High
BE1	Byte Enable	Active High
WE	Write Enable	Active High
AD	Address Bus	—
DI	Data In	—
DO	Data Out	—
CS	Chip Select	Active High
AFF	FIFO RAM Almost Full Flag	—
FF	FIFO RAM Full Flag	—
AEF	FIFO RAM Almost Empty Flag	—
EF	FIFO RAM Empty Flag	—
RPRST	FIFO RAM Read Pointer Reset	—

Notes:

1. Optional signals.
2. For dual port EBR primitives a trailing ‘A’ or ‘B’ in the signal name specifies the EBR port A or port B respectively.
3. For FIFO RAM mode primitive, a trailing ‘R’ or ‘W’ in the signal name specifies the FIFO read port or write port respectively.
4. For FIFO RAM mode primitive FULLI has the same function as CSW(2) and EMPTYI has the same function as CSR(2).
5. In FIFO mode, CLKW is the write port clock, CSW is the write port chip select, CLKR is the read port clock, CSR is the read port chip select, ORE is the output read enable.

© 2026 Lattice Semiconductor Corp. All Lattice trademarks, registered trademarks, patents, and disclaimers are as listed at www.latticesemi.com/legal.
All other brand or product names are trademarks or registered trademarks of their respective holders. The specifications and information herein are subject to change without notice.

Downloaded from Arrow.com.

The EBR memory supports three forms of write behavior for single or dual port operation:

1. **Normal** – Data on the output appears only during the read cycle. During a write cycle, the data (at the current address) does not appear on the output. This mode is supported for all data widths.
2. **Write Through** – A copy of the input data appears at the output of the same port. This mode is supported for all data widths.
3. **Read-Before-Write** – When new data is being written, the old contents of the address appear at the output.

FIFO Configuration

The FIFO has a write port with data-in, CEW, WE and CLKW signals. There is a separate read port with data-out, RCE, RE and CLKR signals. The FIFO internally generates Almost Full, Full, Almost Empty and Empty Flags. The Full and Almost Full flags are registered with CLKW. The Empty and Almost Empty flags are registered with CLKR. Table 2.7 shows the range of programming values for these flags.

Table 2.7. Programmable FIFO Flag Ranges[1]

Flag Name	Programming Range
Full (FF)	1 to max (up to 2N-1)
Almost Full (AF)	1 to Full-1
Almost Empty (AE)	1 to Full-1
Empty (EF)	0

Note:

1. N = Address bit width

The FIFO state machine supports two types of reset signals: RST and RPRST. The RST signal is a global reset that clears the contents of the FIFO by resetting the read/write pointer and puts the FIFO flags in their initial reset state. The RPRST signal is used to reset the read pointer. The purpose of this reset is to retransmit the data that is in the FIFO. In these applications it is important to keep careful track of when a packet is written into or read from the FIFO.

Memory Core Reset

The memory core contains data output latches for ports A and B. These are simple latches that can be reset synchronously or asynchronously. RSTA and RSTB are local signals, which reset the output latches associated with port A and port B respectively. The Global Reset (GSRN) signal resets both ports. The output data latches and associated resets for both ports are as shown in Figure 2.9.

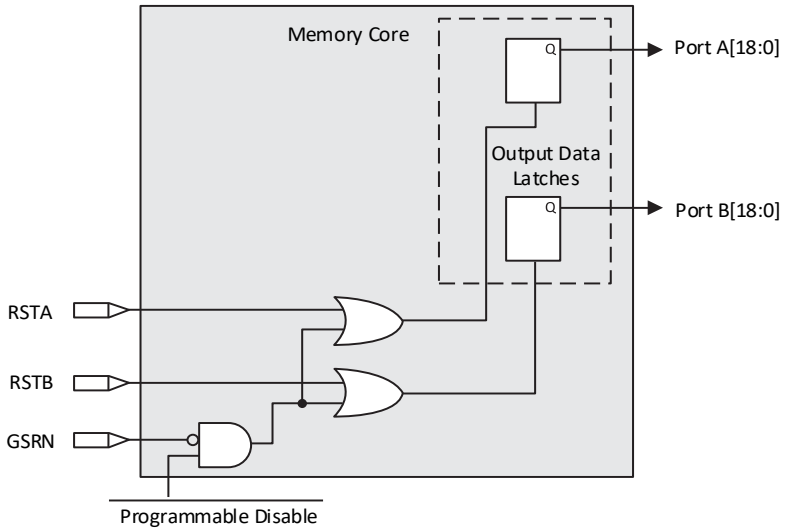

Figure 2.9. Memory Core Reset

For further information on the sysMEM EBR block, refer to Memory Usage Guide for MachXO2 Devices (FPGA-TN-02159).

© 2026 Lattice Semiconductor Corp. All Lattice trademarks, registered trademarks, patents, and disclaimers are as listed at www.latticesemi.com/legal.
All other brand or product names are trademarks or registered trademarks of their respective holders. The specifications and information herein are subject to change without notice.

Downloaded from Arrow.com.

EBR Asynchronous Reset

EBR asynchronous reset or GSR (if used) can only be applied if all clock enables are low for a clock cycle before the reset is applied and released a clock cycle after the reset is released, as shown in Figure 2.10. The GSR input to the EBR is always asynchronous.

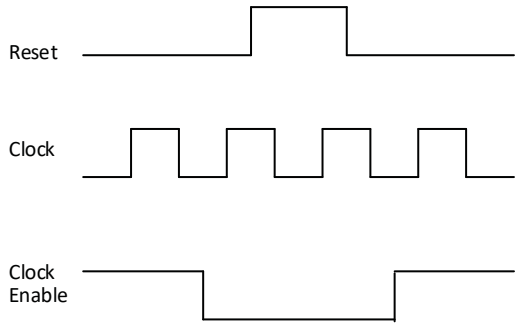

Figure 2.10. EBR Asynchronous Reset (Including GSR) Timing Diagram

If all clock enables remain enabled, the EBR asynchronous reset or GSR may only be applied and released after the EBR read and write clock inputs are in a steady state condition for a minimum of $1/f_{MAX}$ (EBR clock). The reset release must adhere to the EBR synchronous reset setup time before the next active read or write clock edge.

If an EBR is pre-loaded during configuration, the GSR input must be disabled or the release of the GSR during device wake up must occur before the release of the device I/O becoming active.

These instructions apply to all EBR RAM, ROM and FIFO implementations. For the EBR FIFO mode, the GSR signal is always enabled and the WE and RE signals act like the clock enable signals in Figure 2.10. The reset timing rules apply to the RPReset input versus the RE input and the RST input versus the WE and RE inputs. Both RST and RPReset are always asynchronous EBR inputs. For more details refer to Memory Usage Guide for MachXO2 Devices (FPGA-TN-02159).

Note that there are no reset restrictions if the EBR synchronous reset is used and the EBR GSR input is disabled.

2.6. Programmable I/O Cells (PIC)

The programmable logic associated with an I/O is called a PIO. The individual PIO are connected to their respective sysI/O buffers and pads. On the MachXO2 devices, the PIO cells are assembled into groups of four PIO cells called a Programmable I/O Cell or PIC. The PICs are placed on all four sides of the device.

On all the MachXO2 devices, two adjacent PIOs can be combined to provide a complementary output driver pair.

The MachXO2-640U, MachXO2-1200/U and higher density devices contain enhanced I/O capability. All PIO pairs on these larger devices can implement differential receivers. Half of the PIO pairs on the top edge of these devices can be configured as true LVDS transmit pairs. The PIO pairs on the bottom edge of these higher density devices have on-chip differential termination and also provide PCI support.

© 2026 Lattice Semiconductor Corp. All Lattice trademarks, registered trademarks, patents, and disclaimers are as listed at www.latticesemi.com/legal.
All other brand or product names are trademarks or registered trademarks of their respective holders. The specifications and information herein are subject to change without notice.

Downloaded from Arrow.com.

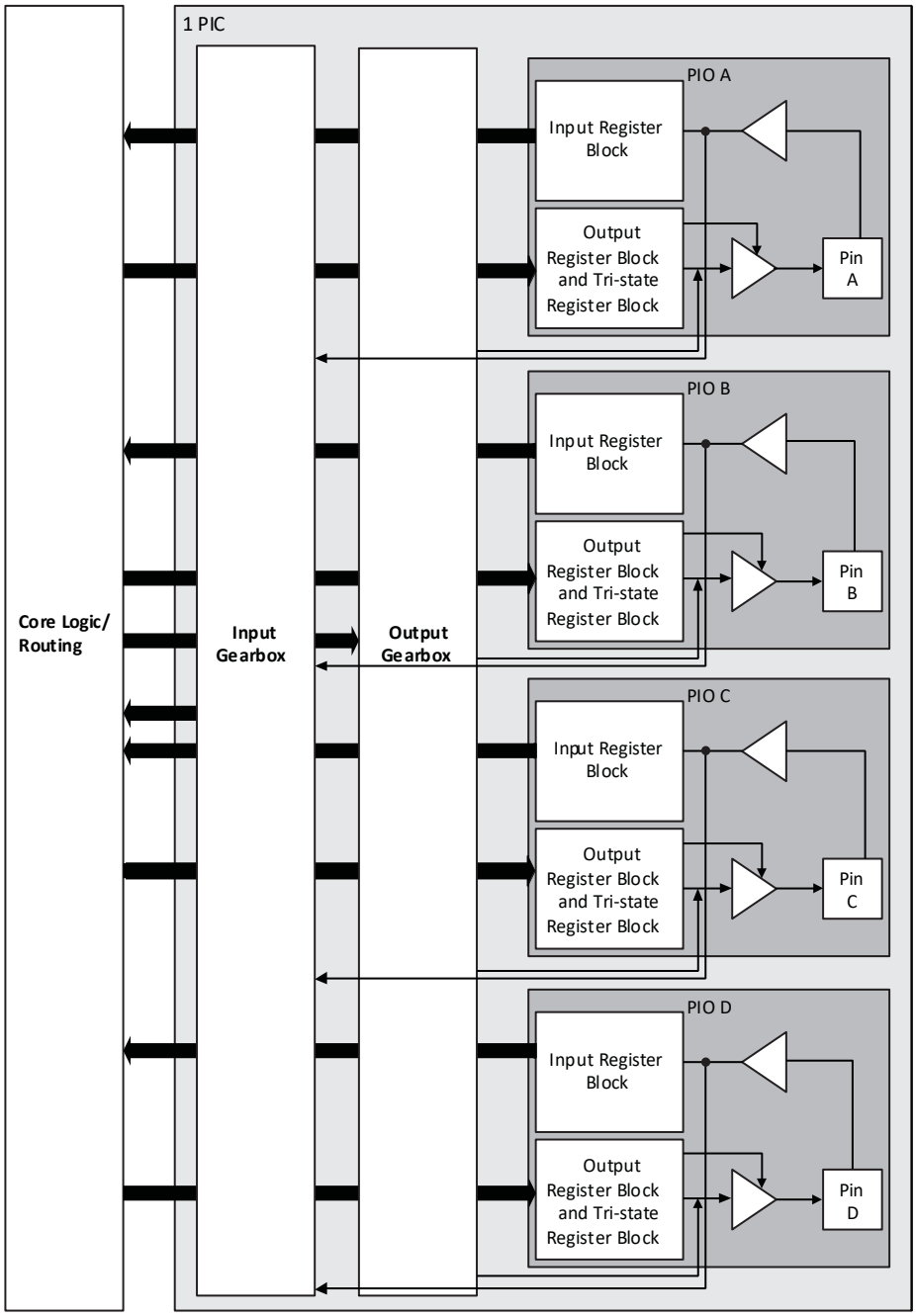

Notes:
1. Input gearbox is available only in PIC on the bottom edge of MachXO2-640U, MachXO2-1200/U and larger devices.
2. Output gearbox is available only in PIC on the top edge of MachXO2-640U, MachXO2-1200/U and larger devices.

Figure 2.11. Group of Four Programmable I/O Cells

© 2026 Lattice Semiconductor Corp. All Lattice trademarks, registered trademarks, patents, and disclaimers are as listed at www.latticesemi.com/legal.
All other brand or product names are trademarks or registered trademarks of their respective holders. The specifications and information herein are subject to change without notice.

Downloaded from Arrow.com.

2.7. PIO

The PIO contains three blocks: an input register block, output register block and tri-state register block. These blocks contain registers for operating in a variety of modes along with the necessary clock and selection logic.

Table 2.8. PIO Signal List[1]

Pin Name	I/O Type	Description
CE	Input	Clock Enable
D	Input	Pin input from sysI/O buffer
INDD	Output	Register bypassed input
INCK	Output	Clock input
Q0	Output	DDR positive edge input
Q1	Output	Registered input/DDR negative edge input
D0	Input	Output signal from the core (SDR and DDR)
D1	Input	Output signal from the core (DDR)
TD	Input	Tri-state signal from the core
Q	Output	Data output signals to sysI/O Buffer
TQ	Output	Tri-state output signals to sysI/O Buffer
DQSR90	Input	DQS shift 90-degree read clock
DQSW90	Input	DQS shift 90-degree write clock
DDRCLKPOL	Input	DDR input register polarity control signal from DQS
SCLK	Input	System clock for input and output/tri-state blocks
RST	Input	Local set reset signal

Note:

1. Available in PIO on right edge only.

2.7.1. Input Register Block

The input register blocks for the PIOs on all edges contain delay elements and registers that can be used to condition high-speed interface signals before they are passed to the device core. In addition to this functionality, the input register blocks for the PIOs on the right edge include built-in logic to interface to DDR memory.

Figure 2.12 shows the input register block for the PIOs located on the left, top and bottom edges. Figure 2.13 shows the input register block for the PIOs on the right edge.

Left, Top, Bottom Edges

Input signals are fed from the sysI/O buffer to the input register block (as signal D). If desired, the input signal can bypass the register and delay elements and be used directly as a combinatorial signal (INDD), and a clock (INCK). If an input delay is desired, users can select a fixed delay. I/O on the bottom edge also have a dynamic delay, DEL[4:0]. The delay, if selected, reduces input register hold time requirements when using a global clock. The input block allows two modes of operation. In single data rate (SDR) the data is registered with the system clock (SCLK) by one of the registers in the single data rate sync register block. In Generic DDR mode, two registers are used to sample the data on the positive and negative edges of the system clock (SCLK) signal, creating two data streams.

© 2026 Lattice Semiconductor Corp. All Lattice trademarks, registered trademarks, patents, and disclaimers are as listed at www.latticesemi.com/legal.
All other brand or product names are trademarks or registered trademarks of their respective holders. The specifications and information herein are subject to change without notice.

Downloaded from Arrow.com.

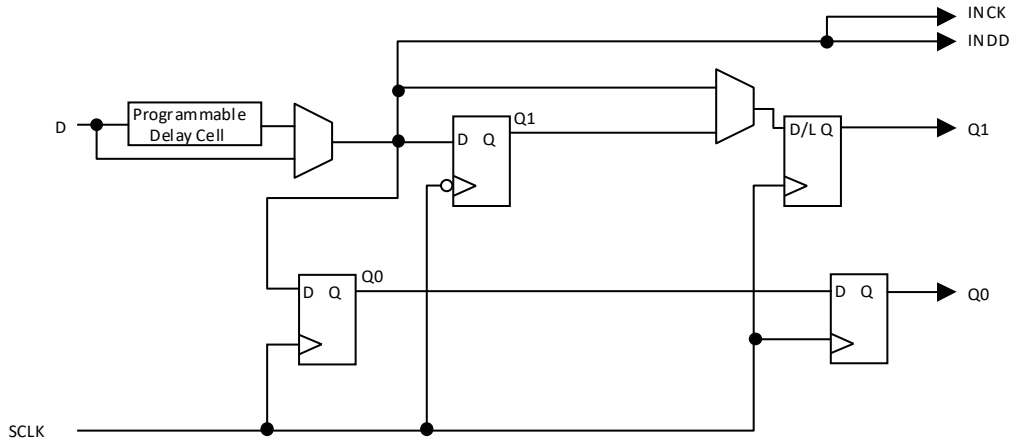

Figure 2.12. MachXO2 Input Register Block Diagram (PIO on Left, Top and Bottom Edges)

Right Edge

The input register block on the right edge is a superset of the same block on the top, bottom, and left edges. In addition to the modes described above, the input register block on the right edge also supports DDR memory mode.

In DDR memory mode, two registers are used to sample the data on the positive and negative edges of the modified DQS (DQSR90) in the DDR Memory mode creating two data streams. Before entering the core, these two data streams are synchronized to the system clock to generate two data streams.

The signal DDRCLKPOL controls the polarity of the clock used in the synchronization registers. It ensures adequate timing when data is transferred to the system clock domain from the DQS domain. The DQSR90 and DDRCLKPOL signals are generated in the DQS read-write block.

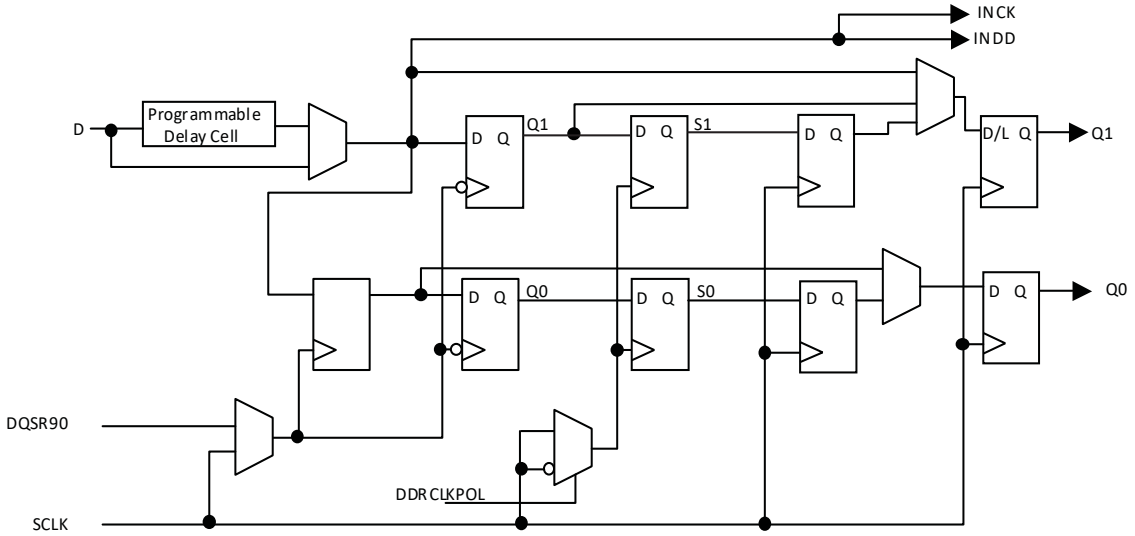

Figure 2.13. MachXO2 Input Register Block Diagram (PIO on Right Edge)

© 2026 Lattice Semiconductor Corp. All Lattice trademarks, registered trademarks, patents, and disclaimers are as listed at www.latticesemi.com/legal.
All other brand or product names are trademarks or registered trademarks of their respective holders. The specifications and information herein are subject to change without notice.

Downloaded from Arrow.com.

2.7.2. Output Register Block

The output register block registers signals from the core of the device before they are passed to the sysI/O buffers.

Left, Top, Bottom Edges

In SDR mode, D0 feeds one of the flip-flops that then feeds the output. The flip-flop can be configured as a D-type register or latch.

In DDR generic mode, D0 and D1 inputs are fed into registers on the positive edge of the clock. At the next falling edge the registered D1 input is registered into the register Q1. A multiplexer running off the same clock is used to switch the mux between the outputs of registers Q0 and Q1 that feed the output.

Figure 2.14 shows the output register block on the left, top and bottom edges.

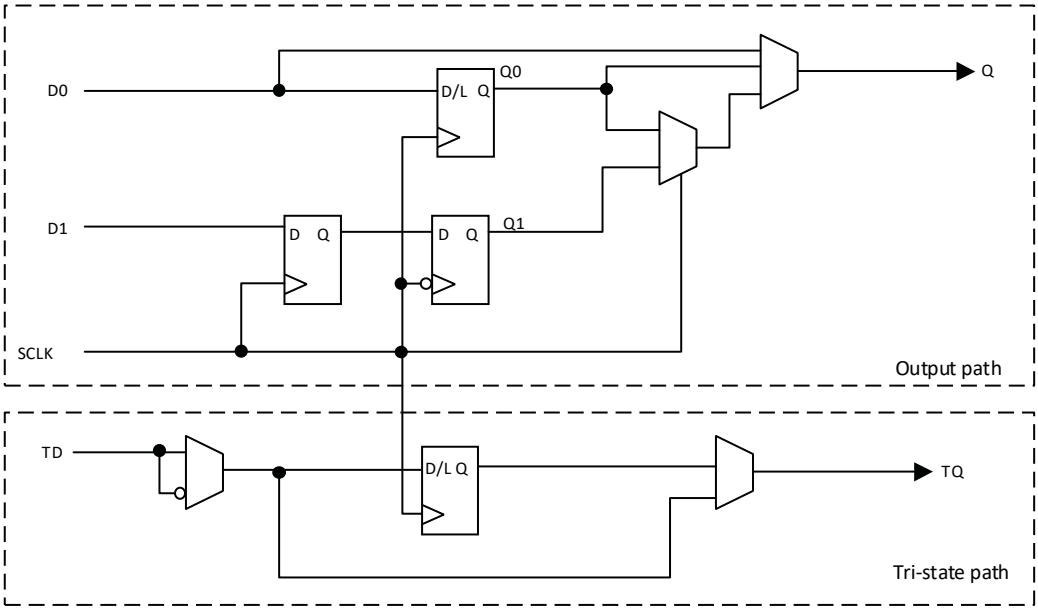

Figure 2.14. MachXO2 Output Register Block Diagram (PIO on the Left, Top and Bottom Edges)

Right Edge

The output register block on the right edge is a superset of the output register on left, top and bottom edges of the device. In addition to supporting SDR and Generic DDR modes, the output register blocks for PIOs on the right edge include additional logic to support DDR-memory interfaces. Operation of this block is similar to that of the output register block on other edges.

In DDR memory mode, D0 and D1 inputs are fed into registers on the positive edge of the clock. At the next falling edge the registered D1 input is registered into the register Q1. A multiplexer running off the DQSW90 signal is used to switch the mux between the outputs of registers Q0 and Q1 that feed the output.

Figure 2.15 shows the output register block on the right edge.

© 2026 Lattice Semiconductor Corp. All Lattice trademarks, registered trademarks, patents, and disclaimers are as listed at www.latticesemi.com/legal.
All other brand or product names are trademarks or registered trademarks of their respective holders. The specifications and information herein are subject to change without notice.

Downloaded from Arrow.com.

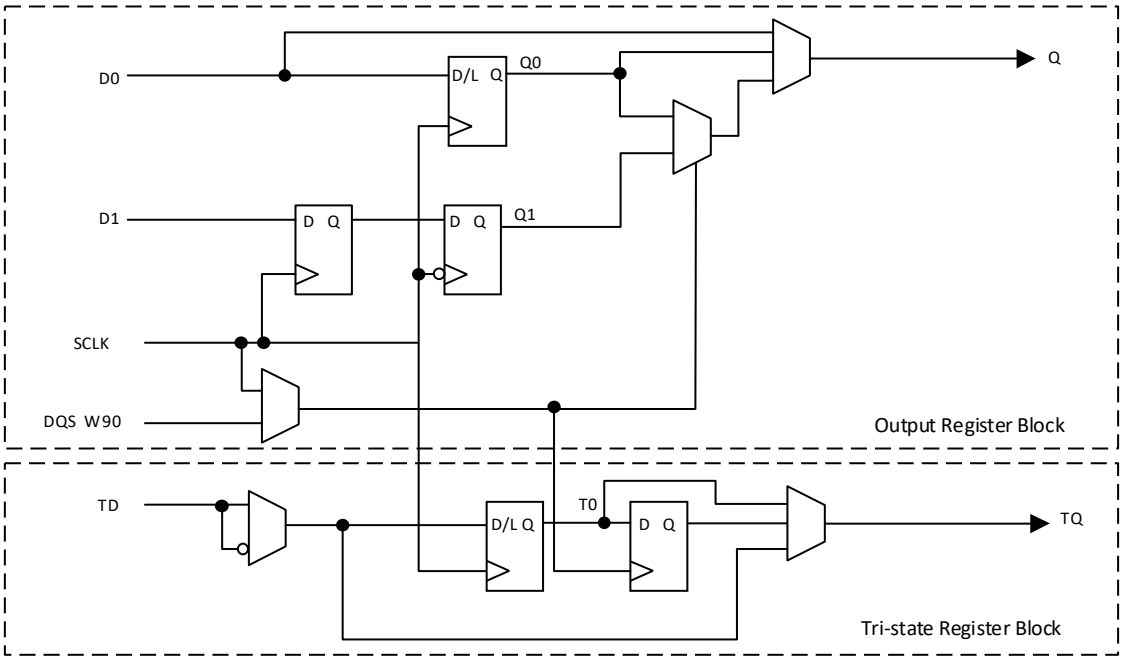

Figure 2.15. MachXO2 Output Register Block Diagram (PIO on the Right Edges)

2.7.3. Tri-state Register Block

The tri-state register block registers tri-state control signals from the core of the device before they are passed to the sysI/O buffers. The block contains a register for SDR operation. In SDR, TD input feeds one of the flip-flops that then feeds the output.

The tri-state register blocks on the right edge contain an additional register for DDR memory operation. In DDR memory mode, the register TS input is fed into another register that is clocked using the DQSW90 signal. The output of this register is used as a tri-state control.

2.8. Input Gearbox

Each PIC on the bottom edge has a built-in 1:8 input gearbox. Each of these input gearboxes may be programmed as a 1:7 de-serializer or as one IDDRX4 (1:8) gearbox or as two IDDRX2 (1:4) gearboxes. Table 2.9 shows the gearbox signals.

Table 2.9. Input Gearbox Signal List

Name	I/O Type	Description
D	Input	High-speed data input after programmable delay in PIO A input register block
ALIGNWD	Input	Data alignment signal from device core
SCLK	Input	Slow-speed system clock
ECLK[1:0]	Input	High-speed edge clock
RST	Input	Reset
Q[7:0]	Output	Low-speed data to device core: Video RX(1:7): Q[6:0] GDDRX4(1:8): Q[7:0] GDDRX2(1:4)(IOL-A): Q4, Q5, Q6, Q7 GDDRX2(1:4)(IOL-C): Q0, Q1, Q2, Q3

© 2026 Lattice Semiconductor Corp. All Lattice trademarks, registered trademarks, patents, and disclaimers are as listed at www.latticesemi.com/legal.
All other brand or product names are trademarks or registered trademarks of their respective holders. The specifications and information herein are subject to change without notice.

Downloaded from Arrow.com.

These gearboxes have three stage pipeline registers. The first stage registers sample the high-speed input data by the high-speed edge clock on its rising and falling edges. The second stage registers perform data alignment based on the control signals UPDATE and SEL0 from the control block. The third stage pipeline registers pass the data to the device core synchronized to the low-speed system clock. Figure 2.16 shows a block diagram of the input gearbox.

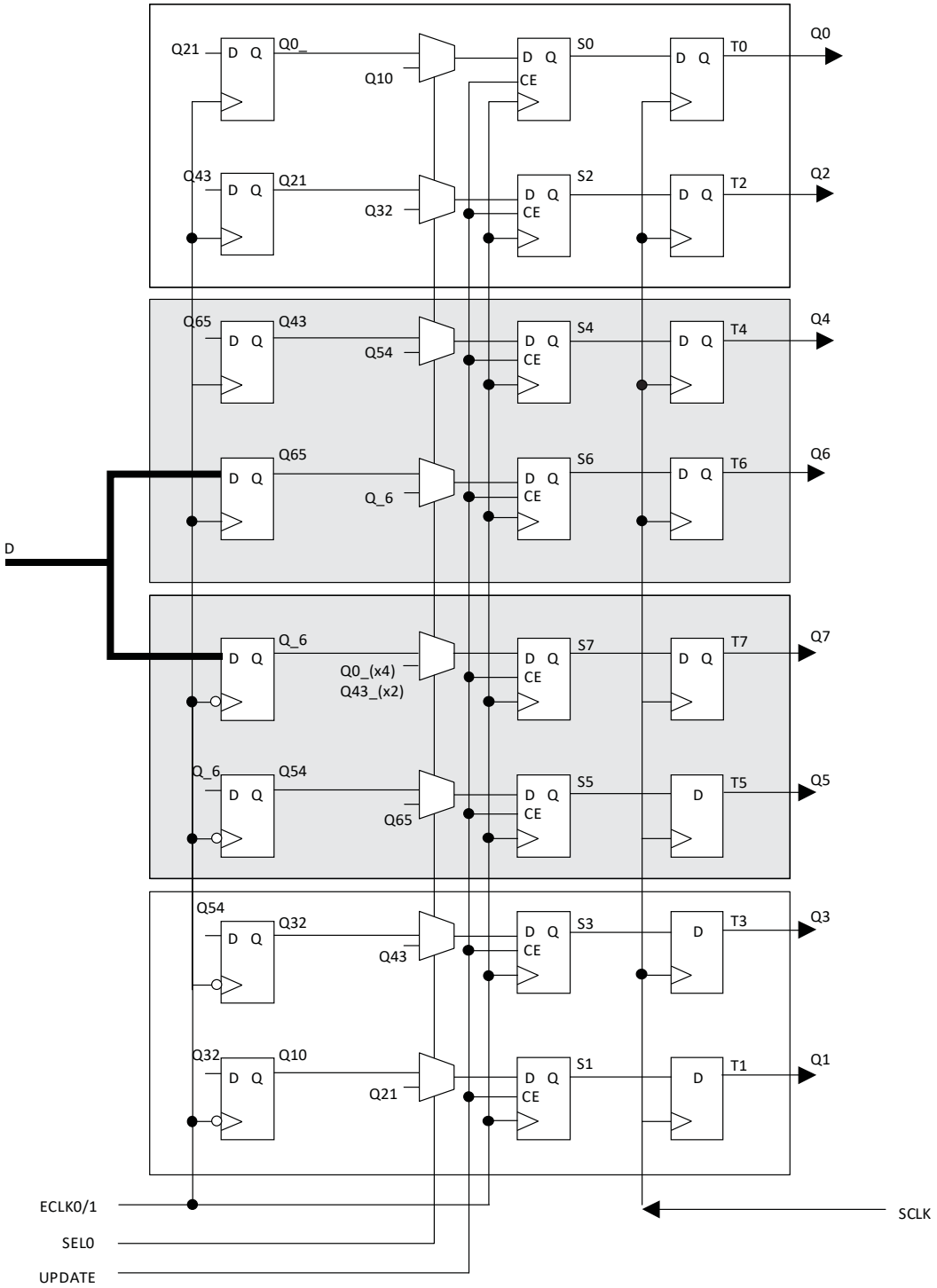

Figure 2.16. Input Gearbox

© 2026 Lattice Semiconductor Corp. All Lattice trademarks, registered trademarks, patents, and disclaimers are as listed at www.latticesemi.com/legal.
All other brand or product names are trademarks or registered trademarks of their respective holders. The specifications and information herein are subject to change without notice.

Downloaded from Arrow.com.

More information on the input gearbox is available in Implementing High-Speed Interfaces with MachXO2 Devices (FPGA-TN-02153).

2.9. Output Gearbox

Each PIC on the top edge has a built-in 8:1 output gearbox. Each of these output gearboxes may be programmed as a 7:1 serializer or as one ODDRX4 (8:1) gearbox or as two ODDRX2 (4:1) gearboxes. Table 2.10 shows the gearbox signals.

Table 2.10. Output Gearbox Signal List

Name	I/O Type	Description
Q	Output	High-speed data output
D[7:0]	Input	Low-speed data from device core
Video TX(7:1): D[6:0]	—	—
GDDRX4(8:1): D[7:0]	—	—
GDDRX2(4:1)(IOL-A): D[3:0]	—	—
GDDRX2(4:1)(IOL-C): D[7:4]	—	—
SCLK	Input	Slow-speed system clock
ECLK [1:0]	Input	High-speed edge clock
RST	Input	Reset

The gearboxes have three stage pipeline registers. The first stage registers sample the low-speed input data on the low-speed system clock. The second stage registers transfer data from the low-speed clock registers to the highspeed clock registers. The third stage pipeline registers controlled by high-speed edge clock shift and mux the high-speed data out to the sysI/O buffer. Figure 2.17 shows the output gearbox block diagram.

© 2026 Lattice Semiconductor Corp. All Lattice trademarks, registered trademarks, patents, and disclaimers are as listed at www.latticesemi.com/legal.
All other brand or product names are trademarks or registered trademarks of their respective holders. The specifications and information herein are subject to change without notice.

Downloaded from Arrow.com.

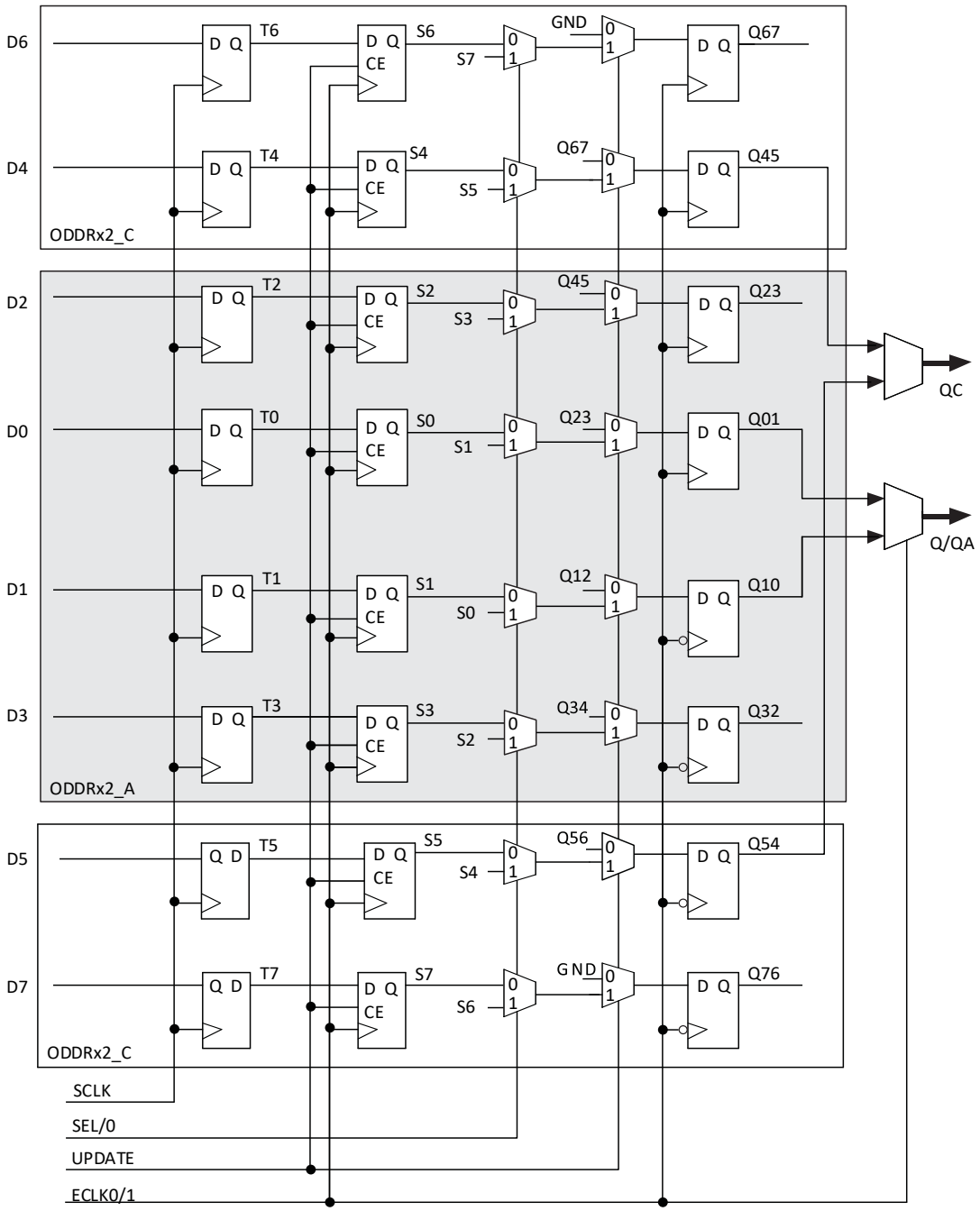

Figure 2.17. Output Gearbox

More information on the output gearbox is available in Implementing High-Speed Interfaces with MachXO2 Devices (FPGA-TN-02153).

© 2026 Lattice Semiconductor Corp. All Lattice trademarks, registered trademarks, patents, and disclaimers are as listed at www.latticesemi.com/legal.
All other brand or product names are trademarks or registered trademarks of their respective holders. The specifications and information herein are subject to change without notice.

Downloaded from Arrow.com.

2.10. DDR Memory Support

Certain PICs on the right edge of MachXO2-640U, MachXO2-1200/U and larger devices, have additional circuitry to allow the implementation of DDR memory interfaces. There are two groups of 14 or 12 PIOs each on the right edge with additional circuitry to implement DDR memory interfaces. This capability allows the implementation of up to 16-bit wide memory interfaces. One PIO from each group contains a control element, the DQS Read/Write Block, to facilitate the generation of clock and control signals (DQSR90, DQSW90, DDRCLKPOL and DATAVALID). These clock and control signals are distributed to the other PIO in the group through dedicated low skew routing.

2.11. DQS Read Write Block

Source synchronous interfaces generally require the input clock to be adjusted in order to correctly capture data at the input register. For most interfaces a PLL is used for this adjustment. However, in DDR memories the clock (referred to as DQS) is not free-running so this approach cannot be used. The DQS Read Write block provides the required clock alignment for DDR memory interfaces. DQSR90 and DQSW90 signals are generated by the DQS Read Write block from the DQS input.

In a typical DDR memory interface design, the phase relationship between the incoming delayed DQS strobe and the internal system clock (during the read cycle) is unknown. The MachXO2 family contains dedicated circuits to transfer data between these domains. To prevent set-up and hold violations, at the domain transfer between DQS (delayed) and the system clock, a clock polarity selector is used. This circuit changes the edge on which the data is registered in the synchronizing registers in the input register block. This requires evaluation at the start of each read cycle for the correct clock polarity. Prior to the read operation in DDR memories, DQS is in tri-state (pulled by termination). The DDR memory device drives DQS low at the start of the preamble state. A dedicated circuit in the DQS Read Write block detects the first DQS rising edge after the preamble state and generates the DDRCLKPOL signal. This signal is used to control the polarity of the clock to the synchronizing registers.

The temperature, voltage and process variations of the DQS delay block are compensated by a set of calibration signals (6-bit bus) from a DLL on the right edge of the device. The DLL loop is compensated for temperature, voltage and process variations by the system clock and feedback loop.

2.12. sysI/O Buffer

Each I/O is associated with a flexible buffer referred to as a sysI/O buffer. These buffers are arranged around the periphery of the device in groups referred to as banks. The sysI/O buffers allow users to implement a wide variety of standards that are found in today's systems including LVCMOS, TTL, PCI, SSTL, HSTL, LVDS, BLVDS, MLVDS and LVPECL.

Each bank is capable of supporting multiple I/O standards. In the MachXO2 devices, single-ended output buffers, ratioed input buffers (LVTTL, LVCMOS and PCI), differential (LVDS) and referenced input buffers (SSTL and HSTL) are powered using I/O supply voltage (V_{CCIO}). Each sysI/O bank has its own V_{CCIO}. In addition, each bank has a voltage reference, V_{REF}, which allows the use of referenced input buffers independent of the bank V_{CCIO}.

MachXO2-256 and MachXO2-640 devices contain single-ended ratioed input buffers and single-ended output buffers with complementary outputs on all the I/O banks. Note that the single-ended input buffers on these devices do not contain PCI clamps. In addition to the single-ended I/O buffers these two devices also have differential and referenced input buffers on all I/O. The I/O are arranged in pairs, the two pads in the pair are described as "T" and "C", where the true pad is associated with the positive side of the differential input buffer and the comp (complementary) pad is associated with the negative side of the differential input buffer.

© 2026 Lattice Semiconductor Corp. All Lattice trademarks, registered trademarks, patents, and disclaimers are as listed at www.latticesemi.com/legal.
All other brand or product names are trademarks or registered trademarks of their respective holders. The specifications and information herein are subject to change without notice.

Downloaded from Arrow.com.

MachXO2-640U, MachXO2-1200/U, MachXO2-2000/U, MachXO2-4000 and MachXO2-7000 devices contain three types of sysI/O buffer pairs.

1. Left and Right sysI/O Buffer Pairs

   The sysI/O buffer pairs in the left and right banks of the device consist of two single-ended output drivers and two single-ended input buffers (for ratioed inputs such as LVCMOS and LVTTL). The I/O pairs on the left and right of the devices also have differential and referenced input buffers.

2. Bottom sysI/O Buffer Pairs

   The sysI/O buffer pairs in the bottom bank of the device consist of two single-ended output drivers and two single-ended input buffers (for ratioed inputs such as LVCMOS and LVTTL). The I/O pairs on the bottom also have differential and referenced input buffers. Only the I/O on the bottom banks have programmable PCI clamps and differential input termination. The PCI clamp is enabled after V_{CC} and V_{CCIO} are at valid operating levels and the device has been configured.

3. Top sysI/O Buffer Pairs

   The sysI/O buffer pairs in the top bank of the device consist of two single-ended output drivers and two single-ended input buffers (for ratioed inputs such as LVCMOS and LVTTL). The I/O pairs on the top also have differential and referenced I/O buffers. Half of the sysI/O buffer pairs on the top edge have true differential outputs. The sysI/O buffer pair comprising of the A and B PIOs in every PIC on the top edge have a differential output driver. The referenced input buffer can also be configured as a differential input buffer.

2.12.1. Typical I/O Behavior During Power-up

The internal power-on-reset (POR) signal is deactivated when V_{CC} and V_{CCIO0} have reached V_{PORUP} level defined in the Power-On-Reset Voltage table in the DC and Switching Characteristics section of this data sheet. After the POR signal is deactivated, the FPGA core logic becomes active. It is the user's responsibility to ensure that all VCCIO banks are active with valid input logic levels to properly control the output logic states of all the I/O banks that are critical to the application. The default configuration of the I/O pins in a blank device is tri-state with a weak pulldown to GND (some pins such as PROGRAMN and the JTAG pins have weak pull-up to V_{CCIO} as the default functionality). The I/O pins maintain the blank configuration until V_{CC} and V_{CCIO} (for I/O banks containing configuration I/O) have reached V_{PORUP} levels at which time the I/O takes on the user-configured settings only after a proper download/configuration.

2.12.2. Supported Standards

The MachXO2 sysI/O buffer supports both single-ended and differential standards. Single-ended standards can be further subdivided into LVCMOS, LVTTL, and PCI. The buffer supports the LVTTL, PCI, LVCMOS 1.2, 1.5, 1.8, 2.5, and 3.3 V standards. In the LVCMOS and LVTTL modes, the buffer has individually configurable options for drive strength, bus maintenance (weak pull-up, weak pull-down, bus-keeper latch or none) and open drain. BLVDS, MLVDS and LVPECL output emulation is supported on all devices. The MachXO2-640U, MachXO2-1200/U and higher devices support on-chip LVDS output buffers on approximately 50% of the I/O on the top bank. Differential receivers for LVDS, BLVDS, MLVDS and LVPECL are supported on all banks of MachXO2 devices. PCI support is provided in the bottom bank of theMachXO2-640U, MachXO2-1200/U and higher density devices. Table 2.11 summarizes the I/O characteristics of the MachXO2 PLDs.

Table 2.11 and Table 2.12 show the I/O standards (together with their supply and reference voltages) supported by the MachXO2 devices. For further information on utilizing the sysI/O buffer to support a variety of standards see MachXO2 sysIO Usage Guide (FPGA-TN-02158).

© 2026 Lattice Semiconductor Corp. All Lattice trademarks, registered trademarks, patents, and disclaimers are as listed at www.latticesemi.com/legal.
All other brand or product names are trademarks or registered trademarks of their respective holders. The specifications and information herein are subject to change without notice.

Downloaded from Arrow.com.

Table 2.11. I/O Support Device by Device

	MachXO2-256, MachXO2-640	MachXO2-640U, MachXO2-1200	MachXO2-1200U, MachXO2-2000/U, MachXO2-4000, MachXO2-7000
Number of I/O Banks	4	4	6
Type of Input Buffers	Single-ended (all I/O banks) Differential Receivers (all I/O banks)	Single-ended (all I/O banks) Differential Receivers (all I/O banks) Differential input termination (bottom side)	Single-ended (all I/O banks) Differential Receivers (all I/O banks) Differential input termination (bottom side)
Types of Output Buffers	Single-ended buffers with complementary outputs (all I/O Banks)	Single-ended buffers with complementary outputs (all I/O banks) Differential buffers with true LVDS outputs (50% on top side)	Single-ended buffers with complementary outputs (all I/O banks) Differential buffers with true LVDS outputs (50% on top side)
Differential Output Emulation Capability	All I/O Banks	All I/O Banks	All I/O Banks
PCI Clamp Support	No	Clamp on bottom side only	Clamp on bottom side only

Table 2.12. Supported Input Standards

	VCCIO (Typ.)				
Input Standard	**3.3 V**	**2.5 V**	**1.8 V**	**1.5 V**	**1.2 V**
Single Ended Interfaces					
LVTTL	✓	✓[2]	✓[2]	✓[2]	—
LVCMOS33	✓	✓[2]	✓[2]	✓[2]	—
LVCMOS25	✓[2]	✓	✓[2]	✓[2]	—
LVCMOS18	✓[2]	✓[2]	✓	✓[2]	—
LVCMOS15	✓[2]	✓[2]	✓[2]	✓	✓[2]
LVCMOS12	✓[2]	✓[2]	✓[2]	✓[2]	✓
PCI[1]	✓	—	—	—	—
SSTL18 (Class I, Class II)	✓	✓	✓	✓	—
SSTL25 (Class I, Class II)	✓	✓			—
HSTL18 (Class I, Class II)	✓	✓	✓	✓	—
Differential Interfaces					
LVDS	✓	✓	—	—	—
MIPI[3]	✓	✓	—	—	—
Differential SSTL18 Class I, II	✓	✓	✓	✓	—
Differential SSTL25 Class I, II	✓	✓	—	—	—
Differential HSTL18 Class I, II	✓	✓	✓	✓	—

Notes:

1. Bottom banks of MachXO2-640U, MachXO2-1200/U and higher density devices only.
2. Reduced functionality. Refer to MachXO sysIO Usage Guide (FPGA-TN-02169) for more details.
3. These interfaces can be emulated with external resistors in all devices. Refer to MIPI D-PHY Bandwidth Matrix and Implementation (FPGA-TN-02090) for more details.

© 2026 Lattice Semiconductor Corp. All Lattice trademarks, registered trademarks, patents, and disclaimers are as listed at www.latticesemi.com/legal.
All other brand or product names are trademarks or registered trademarks of their respective holders. The specifications and information herein are subject to change without notice.

Downloaded from Arrow.com.

Table 2.13. Supported Output Standards

Output Standard	VCCIO (Typ.)
Single-Ended Interfaces	
LVTTL	3.3
LVCMOS33	3.3
LVCMOS25	2.5
LVCMOS18	1.8
LVCMOS15	1.5
LVCMOS12	1.2
LVCMOS33, Open Drain	—
LVCMOS25, Open Drain	—
LVCMOS18, Open Drain	—
LVCMOS15, Open Drain	—
LVCMOS12, Open Drain	—
PCI333	3.3
SSTL25 (Class I)	2.5
SSTL18 (Class I)	1.8
HSTL18(Class I)	1.8
Differential Interfaces	
LVDS[1, 2]	2.5, 3.3
BLVDS, MLVDS, RSDS[2]	2.5
LVPECL[2]	3.3
MIPI[2]	2.5
Differential SSTL18	1.8
Differential SSTL25	2.5
Differential SSTL25	1.8

Notes:

1. MachXO2-640U, MachXO2-1200/U and larger devices have dedicated LVDS buffers.
2. These interfaces can be emulated with external resistors in all devices.

© 2026 Lattice Semiconductor Corp. All Lattice trademarks, registered trademarks, patents, and disclaimers are as listed at www.latticesemi.com/legal.
All other brand or product names are trademarks or registered trademarks of their respective holders. The specifications and information herein are subject to change without notice.

Downloaded from Arrow.com.

2.12.3. sysI/O Buffer Banks

The numbers of banks vary between the devices of this family. MachXO2-1200U, MachXO2-2000/U and higher density devices have six I/O banks (one bank on the top, right and bottom side and three banks on the left side). The MachXO2-1200 and lower density devices have four banks (one bank per side). Figure 2.18 and Figure 2.19 show the sysI/O banks and their associated supplies for all devices.

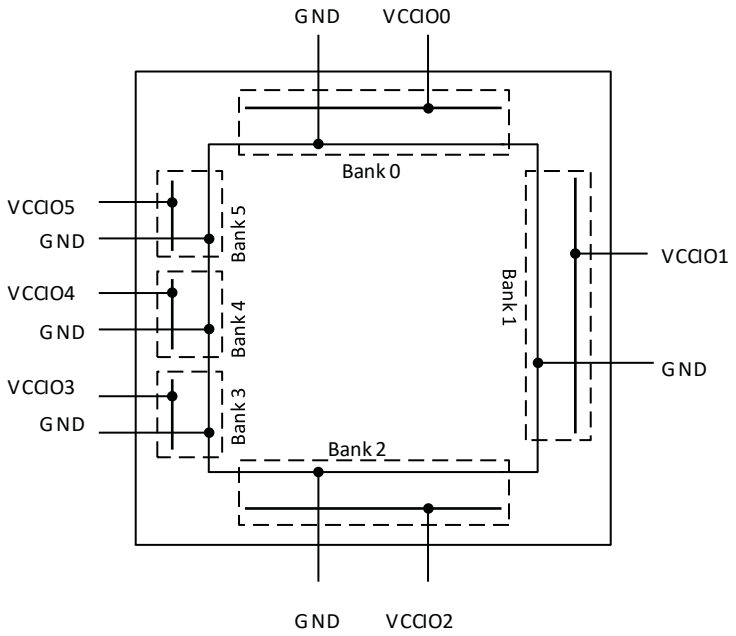

Figure 2.18. MachXO2-1200U, MachXO2-2000/U, MachXO2-4000 and MachXO2-7000 Banks

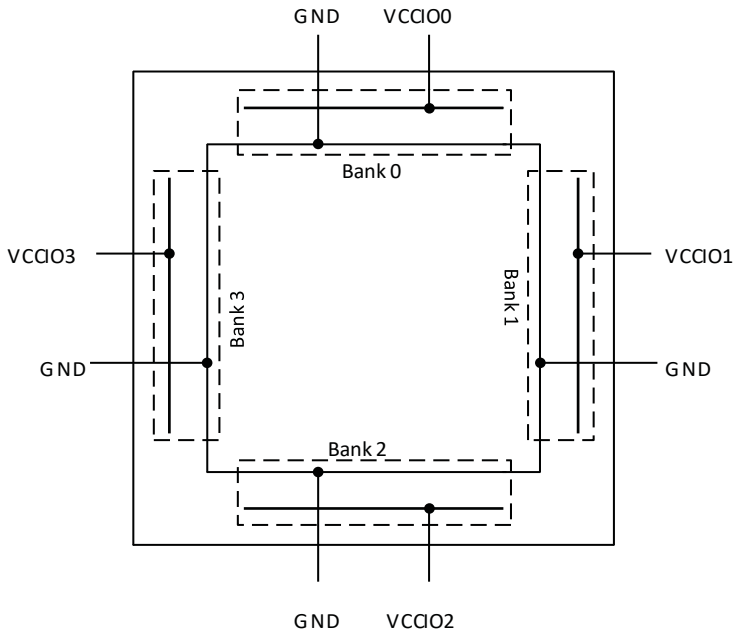

Figure 2.19. MachXO2-256, MachXO2-640/U and MachXO2-1200 Banks

© 2026 Lattice Semiconductor Corp. All Lattice trademarks, registered trademarks, patents, and disclaimers are as listed at www.latticesemi.com/legal.
All other brand or product names are trademarks or registered trademarks of their respective holders. The specifications and information herein are subject to change without notice.

Downloaded from Arrow.com.

2.13. Hot Socketing

The MachXO2 devices have been carefully designed to ensure predictable behavior during power-up and powerdown. Leakage into I/O pins is controlled to within specified limits. This allows for easy integration with the rest of the system. These capabilities make the MachXO2 ideal for many multiple power supply and hot-swap applications.

2.14. On-chip Oscillator

Every MachXO2 device has an internal CMOS oscillator. The oscillator output can be routed as a clock to the clock tree or as a reference clock to the sysCLOCK PLL using general routing resources. The oscillator frequency can be divided by internal logic. There is a dedicated programming bit and a user input to enable/disable the oscillator. The oscillator frequency ranges from 2.08 MHz to 133 MHz. The software default value of the Master Clock (MCLK) is nominally 2.08 MHz. When a different MCLK is selected during the design process, the following sequence takes place:

1. Device powers up with a nominal MCLK frequency of 2.08 MHz.
2. During configuration, users select a different master clock frequency.
3. The MCLK frequency changes to the selected frequency once the clock configuration bits are received.
4. If the user does not select a master clock frequency, then the configuration bitstream defaults to the MCLK frequency of 2.08 MHz.

Table 2.14 lists all the available MCLK frequencies.

Table 2.14. Available MCLK Frequencies

MCLK (MHz, Nominal)	MCLK (MHz, Nominal)	MCLK (MHz, Nominal)
2.08 (default)	9.17	33.25
2.46	10.23	38
3.17	13.3	44.33
4.29	14.78	53.2
5.54	20.46	66.5
7	26.6	88.67
8.31	29.56	133

© 2026 Lattice Semiconductor Corp. All Lattice trademarks, registered trademarks, patents, and disclaimers are as listed at www.latticesemi.com/legal.
All other brand or product names are trademarks or registered trademarks of their respective holders. The specifications and information herein are subject to change without notice.

Downloaded from Arrow.com.

2.15. Embedded Hardened IP Functions and User Flash Memory

All MachXO2 devices provide embedded hardened functions such as SPI, I2C and Timer/Counter. MachXO2-640/U and higher density devices also provide User Flash Memory (UFM). These embedded blocks interface through the WISHBONE interface with routing as shown in Figure 2.20.

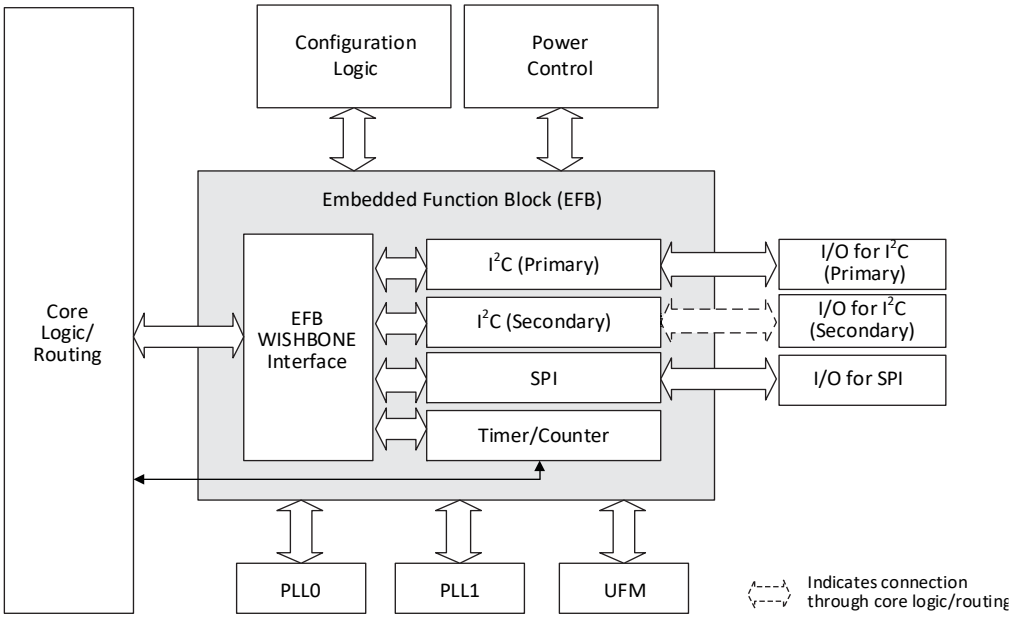

Figure 2.20. MachXO2-256, MachXO2-640/U and MachXO2-1200 Banks

2.15.1. Hardened I2C IP Core

Every MachXO2 device contains two I2C IP cores. These are the primary and secondary I2C IP cores. Either of the two cores can be configured either as an I2C master or as an I2C slave. The only difference between the two IP cores is that the primary core has pre-assigned I/O pins whereas users can assign I/O pins for the secondary core.

When the IP core is configured as a master it is able to control other devices on the I2C bus through the interface. When the core is configured as the slave, the device is able to provide I/O expansion to an I2C Master. The I2C cores support the following functionality:

- Master and Slave operation
- 7-bit and 10-bit addressing
- Multi-master arbitration support
- Up to 400 kHz data transfer speed
- General call support
- Interface to custom logic through 8-bit WISHBONE interface

© 2026 Lattice Semiconductor Corp. All Lattice trademarks, registered trademarks, patents, and disclaimers are as listed at www.latticesemi.com/legal.
All other brand or product names are trademarks or registered trademarks of their respective holders. The specifications and information herein are subject to change without notice.

Downloaded from Arrow.com.

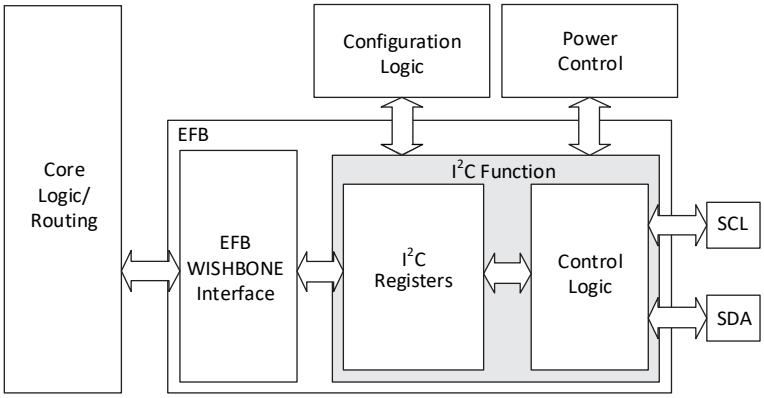

Figure 2.21. I2C Core Block Diagram

Table 2.15 describes the signals interfacing with the I2C cores.

Table 2.15. Supported Input Standards

Signal Name	I/O	Description
i2c_scl	Bi-directional	Bi-directional clock line of the I2C core. The signal is an output if the I2C core is in master mode. The signal is an input if the I2C core is in slave mode. MUST be routed directly to the pre-assigned I/O of the chip. Refer to the Pinout Information section of this document for detailed pad and pin locations of I2C ports in each MachXO2 device.
i2c_sda	Bi-directional	Bi-directional data line of the I2C core. The signal is an output when data is transmitted from the I2C core. The signal is an input when data is received into the I2C core. MUST be routed directly to the pre-assigned I/O of the chip. Refer to the Pinout Information section of this document for detailed pad and pin locations of I2C ports in each MachXO2 device.
i2c_irqo	Output	Interrupt request output signal of the I2C core. The intended usage of this signal is for it to be connected to the WISHBONE master controller (i.e. a microcontroller or state machine) and request an interrupt when a specific condition is met. These conditions are described with the I2C register definitions.
cfg_wake	Output	Wake-up signal – To be connected only to the power module of the MachXO2 device. The signal is enabled only if the “Wakeup Enable” feature has been set within the EFB GUI, I2C Tab.
cfg_stdby	Output	Stand-by signal – To be connected only to the power module of the MachXO2 device. The signal is enabled only if the “Wakeup Enable” feature has been set within the EFB GUI, I2C Tab.

2.15.2. Hardened SPI IP Core

Every MachXO2 device has a hard SPI IP core that can be configured as a SPI master or slave. When the IP core is configured as a master it can control other SPI enabled chips connected to the SPI bus. When the core is configured as the slave, the device can interface to an external SPI master. The SPI IP core on MachXO2 devices supports the following functions:

- Configurable Master and Slave modes
- Full-Duplex data transfer
- Mode fault error flag with CPU interrupt capability
- Double-buffered data register
- Serial clock with programmable polarity and phase
- LSB First or MSB First Data Transfer
- Interface to custom logic through 8-bit WISHBONE interface

There are some limitations on the use of the hardened user SPI. These are defined in the following technical notes:

- Minimizing System Interruption During Configuration Using TransFR Technology (FPGA-TN-02025) (Appendix B)

© 2026 Lattice Semiconductor Corp. All Lattice trademarks, registered trademarks, patents, and disclaimers are as listed at www.latticesemi.com/legal.
All other brand or product names are trademarks or registered trademarks of their respective holders. The specifications and information herein are subject to change without notice.

Downloaded from Arrow.com.

- Using User Flash Memory and Hardened Control Functions in MachXO2 Devices (FPGA-TN-02162)

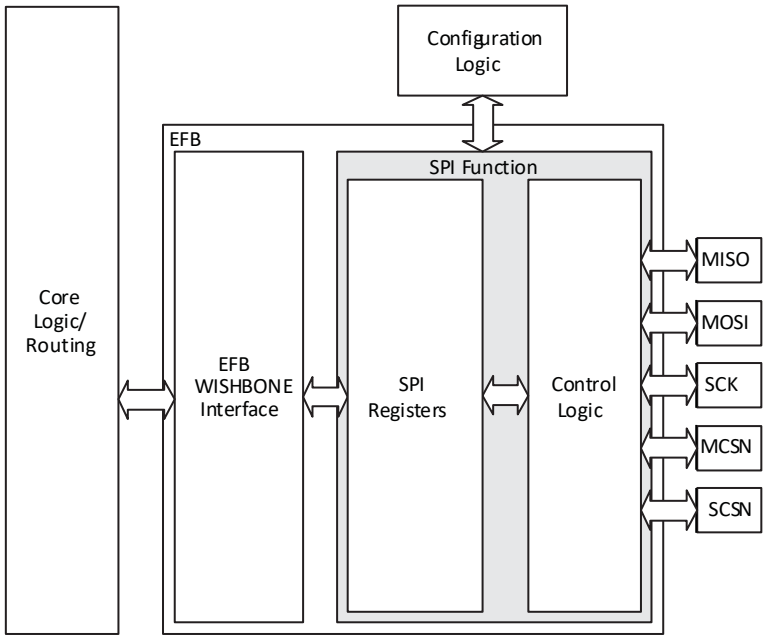

Figure 2.22. SPI Core Block Diagram

Table 2.16 describes the signals interfacing with the SPI cores.

Table 2.16. SPI Core Signal Description

Signal Name	I/O	Master/Slave	Description
spi_csn[0]	O	Master	SPI master chip-select output
spi_csn[1..7]	O	Master	Additional SPI chip-select outputs (total up to eight slaves)
spi_scsn	I	Slave	SPI slave chip-select input
spi_irq	O	Master/Slave	Interrupt request
spi_clk	I/O	Master/Slave	SPI clock. Output in master mode. Input in slave mode.
spi_miso	I/O	Master/Slave	SPI data. Input in master mode. Output in slave mode.
spi_mosi	I/O	Master/Slave	SPI data. Output in master mode. Input in slave mode.
ufm_sn	I	Slave	Configuration Slave Chip Select (active low), dedicated for selecting the User Flash Memory (UFM).
cfg_stdby	O	Master/Slave	Stand-by signal – To be connected only to the power module of the MachXO2 device. The signal is enabled only if the “Wakeup Enable” feature has been set within the EFB GUI, SPI Tab.
cfg_wake	O	Master/Slave	Wake-up signal – To be connected only to the power module of the MachXO2 device. The signal is enabled only if the “Wakeup Enable” feature has been set within the EFB GUI, SPI Tab.

2.15.3. Hardened Timer/Counter

MachXO2 devices provide a hard Timer/Counter IP core. This Timer/Counter is a general purpose, bi-directional, 16-bit timer/counter module with independent output compare units and PWM support. The Timer/Counter supports the following functions:

- Supports the following modes of operation:
- Watchdog timer
- Clear timer on compare match
- Fast PWM

© 2026 Lattice Semiconductor Corp. All Lattice trademarks, registered trademarks, patents, and disclaimers are as listed at www.latticesemi.com/legal.
All other brand or product names are trademarks or registered trademarks of their respective holders. The specifications and information herein are subject to change without notice.

Downloaded from Arrow.com.

- Phase and Frequency Correct PWM
- Programmable clock input source
- Programmable input clock prescaler
- One static interrupt output to routing
- One wake-up interrupt to on-chip standby mode controller.
- Three independent interrupt sources: overflow, output compare match, and input capture
- Auto reload
- Time-stamping support on the input capture unit
- Waveform generation on the output
- Glitch-free PWM waveform generation with variable PWM period
- Internal WISHBONE bus access to the control and status registers
- Stand-alone mode with preloaded control registers and direct reset input

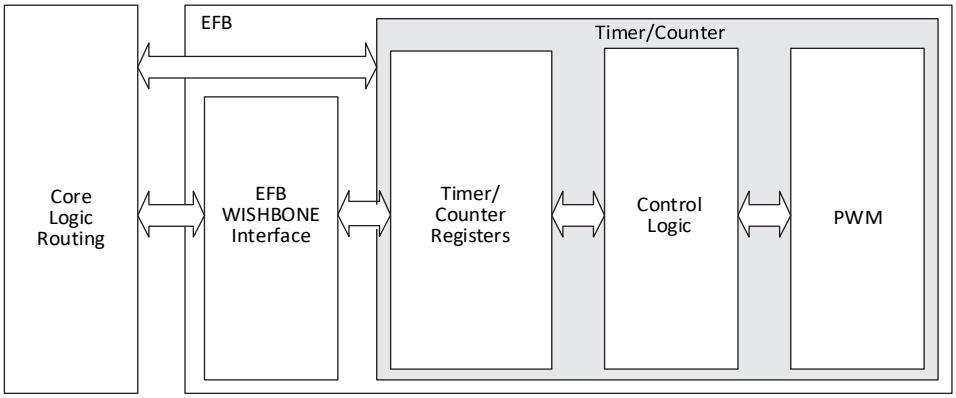

Figure 2.23. Timer/Counter Block Diagram

Table 2.17. Timer/Counter Signal Description

Port	I/O	Description
tc_clki	I	Timer/Counter input clock signal
tc_rstn	I	Register tc_rstn_ena is preloaded by configuration to always keep this pin enabled
tc_ic	I	Input capture trigger event, applicable for non-pwm modes with WISHBONE interface. If enabled, a rising edge of this signal is detected and synchronized to capture tc_cnt value into tc_icr for time-stamping.
tc_int	O	Without WISHBONE – Can be used as overflow flag With WISHBONE – Controlled by three IRQ registers
tc_oc	O	Timer counter output signal

For more details on these embedded functions, refer to Using User Flash Memory and Hardened Control Functions in MachXO2 Devices (FPGA-TN-02162).

2.16. User Flash Memory (UFM)

MachXO2-640/U and higher density devices provide a User Flash Memory block, which can be used for a variety of applications including storing a portion of the configuration image, initializing EBRs, to store PROM data or, as a general purpose user Flash memory. The UFM block connects to the device core through the embedded function block WISHBONE interface. Users can also access the UFM block through the JTAG, I2C and SPI interfaces of the device. The UFM block offers the following features:

- Non-volatile storage up to 256 kbits
- 100K write cycles

© 2026 Lattice Semiconductor Corp. All Lattice trademarks, registered trademarks, patents, and disclaimers are as listed at www.latticesemi.com/legal.
All other brand or product names are trademarks or registered trademarks of their respective holders. The specifications and information herein are subject to change without notice.

Downloaded from Arrow.com.

- Write access is performed page-wise; each page has 128 bits (16 bytes)
- Auto-increment addressing
- WISHBONE interface

For more information on the UFM, refer to Using User Flash Memory and Hardened Control Functions in MachXO2 Devices (FPGA-TN-02162).

2.17. Standby Mode and Power Saving Options

MachXO2 devices are available in three options for maximum flexibility: ZE, HC and HE devices. The ZE devices have ultra low static and dynamic power consumption. These devices use a 1.2 V core voltage that further reduces power consumption. The HC and HE devices are designed to provide high performance. The HC devices have a built-in voltage regulator to allow for 2.5 V VCC and 3.3 V VCC while the HE devices operate at 1.2 V VCC.

MachXO2 devices have been designed with features that allow users to meet the static and dynamic power requirements of their applications by controlling various device subsystems such as the bandgap, power-on-reset circuitry, I/O bank controllers, power guard, on-chip oscillator, PLLs, and so on. In order to maximize power savings, MachXO2 devices support an ultra low power Stand-by mode. While most of these features are available in all three device types, these features are mainly intended for use with MachXO2 ZE devices to manage power consumption.

In the stand-by mode the MachXO2 devices are powered on and configured. Internal logic, I/O and memories are switched on and remain operational, as the user logic waits for an external input. The device enters this mode when the standby input of the standby controller is toggled or when an appropriate I2C or JTAG instruction is issued by an external master. Various subsystems in the device, such as the band gap, power-on-reset circuitry and so on, can be configured such that they are automatically turned “off” or go into a low power consumption state to save power when the device enters this state. Note that the MachXO2 devices are powered on when in standby mode and all power supplies should remain in the Recommended Operating Conditions.

Table 2.18. MachXO2 Power Saving Features Description

Device Subsystem	Feature Description
Bandgap	The bandgap can be turned off in standby mode. When the Bandgap is turned off, analog circuitry such as the POR, PLLs, on-chip oscillator, and referenced and differential I/O buffers are also turned off. Bandgap can only be turned off for 1.2 V devices.
Power-On-Reset (POR)	The POR can be turned off in standby mode. This monitors VCC levels. In the event of unsafe VCC drops, this circuit reconfigures the device. When the POR circuitry is turned off, limited power detector circuitry is still active. This option is only recommended for applications in which the power supply rails are reliable.
On-Chip Oscillator	The on-chip oscillator has two power saving features. It may be switched off if it is not needed in your design. It can also be turned off in Standby mode.
PLL	Similar to the on-chip oscillator, the PLL also has two power saving features. It can be statically switched off if it is not needed in a design. It can also be turned off in Standby mode. The PLL waits until all output clocks from the PLL are driven low before powering off.
I/O Bank Controller	Referenced and differential I/O buffers (used to implement standards such as HSTL, SSTL and LVDS) consume more than ratioed single-ended I/O such as LVCMOS and LVTTL. The I/O bank controller allows the user to turn these I/O off dynamically on a per bank selection.
Dynamic Clock Enable for Primary Clock Nets	Each primary clock net can be dynamically disabled to save power.
Power Guard	Power Guard is a feature implemented in input buffers. This feature allows users to switch off the input buffer when it is not needed. This feature can be used in both clock and data paths. Its biggest impact is that in the standby mode it can be used to switch off clock inputs that are distributed using general routing resources.

For more details on the standby mode refer to Power Estimation and Management for MachXO2 Devices (FPGA-TN-02161).

© 2026 Lattice Semiconductor Corp. All Lattice trademarks, registered trademarks, patents, and disclaimers are as listed at www.latticesemi.com/legal.
All other brand or product names are trademarks or registered trademarks of their respective holders. The specifications and information herein are subject to change without notice.

Downloaded from Arrow.com.

2.18. Power-On-Reset

MachXO2 devices have power-on-reset circuitry to monitor V_{CCINT} and V_{CCIO} voltage levels during power-up and operation. At power-up, the POR circuitry monitors V_{CCINT} and V_{CCIO0} (controls configuration) voltage levels. It then triggers download from the on-chip configuration Flash memory after reaching the V_{PORUP} level specified in the Power-On-Reset Voltage table in the DC and Switching Characteristics section of this data sheet. For devices without voltage regulators (ZE and HE devices), V_{CCINT} is the same as the V_{CC} supply voltage. For devices with voltage regulators (HC devices), V_{CCINT} is regulated from the V_{CC} supply voltage. From this voltage reference, the time taken for configuration and entry into user mode is specified as Flash Download Time (tREFRESH) in the DC and Switching Characteristics section of this data sheet. Before and during configuration, the I/O are held in tristate. I/O are released to user functionality once the device has finished configuration. Note that for HC devices, a separate POR circuit monitors external V_{CC} voltage in addition to the POR circuit that monitors the internal postregulated power supply voltage level.

Once the device enters into user mode, the POR circuitry can optionally continue to monitor V_{CCINT} levels. If V_{CCINT} drops below $V_{PORDNBG}$ level (with the bandgap circuitry switched on) or below $V_{PORDNSRAM}$ level (with the bandgap circuitry switched off to conserve power) device functionality cannot be guaranteed. In such a situation the POR issues a reset and begins monitoring the V_{CCINT} and V_{CCIO} voltage levels. $V_{PORDNBG}$ and $V_{PORDNSRAM}$ are both specified in the Power-On-Reset Voltage table in the DC and Switching Characteristics section of this data sheet.

Note that once a ZE or HE device enters user mode, users can switch off the bandgap to conserve power. When the bandgap circuitry is switched off, the POR circuitry also shuts down. The device is designed such that a minimal, low power POR circuit is still operational (this corresponds to the $V_{PORDNSRAM}$ reset point described in the paragraph above). However this circuit is not as accurate as the one that operates when the bandgap is switched on. The low power POR circuit emulates an SRAM cell and is biased to trip before the vast majority of SRAM cells flip. If users are concerned about the V_{CC} supply dropping below V_{CC} (min) they should not shut down the bandgap or POR circuit.

The power-up sequence is described below.

1. I/O tri-state with a weak pull down.
2. VCC/VCCAUX/VCCIO reaches minimal voltage level as recommended in the POR voltage table in the DC and Switching Characteristics section.
3. POR (Power-On-Reset) for internal circuitry de-asserted.
4. Device performs PPT test to ensure Flash to SRAM transfer is reliable.
5. Flash to SRAM transfer.
6. SRAM Done bit set.
7. Device wake up sequence including GSR.
8. Device is active.

2.19. Configuration and Testing

This section describes the configuration and testing features of the MachXO2 family.

2.19.1. IEEE 1149.1-Compliant Boundary Scan Testability

All MachXO2 devices have boundary scan cells that are accessed through an IEEE 1149.1 compliant test access port (TAP). This allows functional testing of the circuit board, on which the device is mounted, through a serial scan path that can access all critical logic nodes. Internal registers are linked internally, allowing test data to be shifted in and loaded directly onto test nodes, or test data to be captured and shifted out for verification. The test access port consists of dedicated I/O: TDI, TDO, TCK and TMS. The test access port shares its power supply with V_{CCIO} Bank 0 and can operate with LVCMOS3.3, 2.5, 1.8, 1.5, and 1.2 standards.

For more details on boundary scan test, see Boundary Scan Testability with Lattice sysIO Capability (AN8066) and Minimizing System Interruption During Configuration Using TransFR Technology (FPGA-TN-02198).

© 2026 Lattice Semiconductor Corp. All Lattice trademarks, registered trademarks, patents, and disclaimers are as listed at www.latticesemi.com/legal.
All other brand or product names are trademarks or registered trademarks of their respective holders. The specifications and information herein are subject to change without notice.

Downloaded from Arrow.com.

2.19.2. Device Configuration

All MachXO2 devices contain two ports that can be used for device configuration. The Test Access Port (TAP), which supports bit-wide configuration and the sysCONFIG port which supports serial configuration through I2C or SPI. The TAP supports both the IEEE Standard 1149.1 Boundary Scan specification and the IEEE Standard 1532 In-System Configuration specification. There are various ways to configure a MachXO2 device:

1. Internal Flash Download
2. JTAG
3. Standard Serial Peripheral Interface (Master SPI mode) – interface to boot PROM memory
4. System microprocessor to drive a serial slave SPI port (SSPI mode)
5. Standard I2C Interface to system microprocessor

Upon power-up, the configuration SRAM is ready to be configured using the selected sysCONFIG port. Once a configuration port is selected, it remains active throughout that configuration cycle. The IEEE 1149.1 port can be activated any time after power-up by sending the appropriate command through the TAP port. Optionally the device can run a CRC check upon entering the user mode. This ensures that the device is configured correctly.

The sysCONFIG port has 10 dual-function pins which can be used as general purpose I/O if they are not required for configuration. See MachXO2 Programming and Configuration Usage Guide (FPGA-TN-02155) for more information about using the dual-use pins as general purpose I/O.

Lattice design software uses proprietary compression technology to compress bit-streams for use in MachXO2 devices. Use of this technology allows Lattice to provide a lower cost solution. In the unlikely event that this technology is unable to compress bitstreams to fit into the amount of on-chip Flash memory, there are a variety of techniques that can be utilized to allow the bitstream to fit in the on-chip Flash memory. For more details, refer to MachXO2 Programming and Configuration Usage Guide (FPGA-TN-02155).

The Test Access Port (TAP) has five dual purpose pins (TDI, TDO, TMS, TCK and JTAGENB). These pins are dual function pins - TDI, TDO, TMS and TCK can be used as general purpose I/O if desired. For more details, refer to MachXO2 Programming and Configuration Usage Guide (FPGA-TN-02155).

TransFR (Transparent Field Reconfiguration)

TransFR is a unique Lattice technology that allows users to update their logic in the field without interrupting system operation using a simple push-button solution. For more details refer to Minimizing System Interruption During Configuration Using TransFR Technology (FPGA-TN-02198) for details.

When implementing background programming of the on-chip Flash, care must be taken for the operation of the PLL. For devices that have two PLLs (XO2-2000U, -4000 and -7000), the system must put the RPLL (Right-side PLL) in reset state during the background Flash programming. More detailed description can be found in MachXO2 Programming and Configuration Usage Guide (FPGA-TN-02155).

Security and One-Time Programmable Mode (OTP)

For applications where security is important, the lack of an external bitstream provides a solution that is inherently more secure than SRAM-based FPGAs. This is further enhanced by device locking. MachXO2 devices contain security bits that, when set, prevent the readback of the SRAM configuration and non-volatile Flash memory spaces. The device can be in one of two modes:

1. Unlocked – Readback of the SRAM configuration and non-volatile Flash memory spaces is allowed.
2. Permanently Locked – The device is permanently locked.

Once set, the only way to clear the security bits is to erase the device. To further complement the security of the device, a One Time Programmable (OTP) mode is available. Once the device is set in this mode it is not possible to erase or re-program the Flash and SRAM OTP portions of the device. For more details, refer to MachXO2 Programming and Configuration Usage Guide (FPGA-TN-02155).

© 2026 Lattice Semiconductor Corp. All Lattice trademarks, registered trademarks, patents, and disclaimers are as listed at www.latticesemi.com/legal.
All other brand or product names are trademarks or registered trademarks of their respective holders. The specifications and information herein are subject to change without notice.

Downloaded from Arrow.com.

Dual Boot

MachXO2 devices can optionally boot from two patterns, a primary bitstream and a golden bitstream. If the primary bitstream is found to be corrupt while being downloaded into the SRAM, the device shall then automatically re-boot from the golden bitstream. Note that the primary bitstream must reside in the on-chip Flash. The golden image MUST reside in an external SPI Flash. For more details, refer to MachXO2 Programming and Configuration Usage Guide (FPGA-TN-02155).

Soft Error Detection

The SED feature is a CRC check of the SRAM cells after the device is configured. This check ensures that the SRAM cells were configured successfully. This feature is enabled by a configuration bit option. The Soft Error Detection can also be initiated in user mode through an input to the fabric. The clock for the Soft Error Detection circuit is generated using a dedicated divider. The undivided clock from the on-chip oscillator is the input to this divider. For low power applications users can switch off the Soft Error Detection circuit. For more details, refer to MachXO2 Soft Error Detection Usage Guide (FPGA-TN-02156).

2.20. TraceID

Each MachXO2 device contains a unique (per device), TraceID that can be used for tracking purposes or for IP security applications. The TraceID is 64 bits long. Eight out of 64 bits are user-programmable, the remaining 56 bits are factory-programmed. The TraceID is accessible through the EFB WISHBONE interface and can also be accessed through the SPI, I2C, or JTAG interfaces.

2.21. Density Shifting

The MachXO2 family has been designed to enable density migration within the same package. Furthermore, the architecture ensures a high success rate when performing design migration from lower density devices to higher density devices. In many cases, it is also possible to shift a lower utilization design targeted for a high-density device to a lower density device. However, the exact details of the final resource utilization can impact the likely success in each case. When migrating from lower to higher density or higher to lower density, ensure that all the power supplies and NC pins of the chosen devices are reviewed. For more details, refer to the MachXO2 migration files.

© 2026 Lattice Semiconductor Corp. All Lattice trademarks, registered trademarks, patents, and disclaimers are as listed at www.latticesemi.com/legal.
All other brand or product names are trademarks or registered trademarks of their respective holders. The specifications and information herein are subject to change without notice.

Downloaded from Arrow.com.

3. DC and Switching Characteristics

3.1. Absolute Maximum Ratings

Table 3.1. Absolute Maximum Ratings[1, 2, 3]

	MachXO2 ZE/HE (1.2 V)	MachXO2 HC (2.5 V / 3.3 V)
Supply Voltage V_{CC}	–0.5 V to 1.32 V	–0.5 V to 3.75 V
Output Supply Voltage V_{CCIO}	–0.5 V to 3.75 V	–0.5 V to 3.75 V
I/O Tristate Voltage Applied[4, 5]	–0.5 V to 3.75 V	–0.5 V to 3.75 V
Dedicated Input Voltage Applied[4]	–0.5 V to 3.75 V	–0.5 V to 3.75 V
Storage Temperature (Ambient)	–55 °C to 125 °C	–55 °C to 125 °C
Junction Temperature (T_J)	–40 °C to 125 °C	–40 °C to 125 °C

Notes:

1. Stress above those listed under the Absolute Maximum Ratings may cause permanent damage to the device. Functional operation of the device at these or any other conditions above those indicated in the operational sections of this specification is not implied.
2. Compliance with the Lattice Thermal Management document is required.
3. All voltages referenced to GND.
4. Overshoot and undershoot of –2 V to (VIHMAX + 2) volts is permitted for a duration of <20 ns.
5. The dual function I2C pins SCL and SDA are limited to –0.25 V to 3.75 V or to –0.3 V with a duration of <20 ns.

3.2. Recommended Operating Conditions

Table 3.2. Recommended Operating Conditions[1]

Symbol	Parameter	Min.	Max.	Units
VCC[1]	Core Supply Voltage for 1.2 V Devices	1.14	1.26	V
	Core Supply Voltage for 2.5 V / 3.3 V Devices	2.375	3.6	V
VCCIO[1,2,3]	I/O Driver Supply Voltage	1.14	3.6	V
t_{JCOM}	Junction Temperature Commercial Operation	0	85	°C
t_{JIND}	Junction Temperature Industrial Operation	–40	100	°C
t_{JAUTO}	Junction Temperature Automotive Operation	–40	125	°C

Notes:

1. Like power supplies must be tied together. For example, if V_{CCIO} and V_{CC} are both the same voltage, they must also be the same supply.
2. See recommended voltages by I/O standard in subsequent table.
3. V_{CCIO} pins of unused I/O banks should be connected to the V_{CC} power supply on boards.

3.3. Power Supply Ramp Rates

Table 3.3. Power Supply Ramp Rates[1]

Symbol	Parameter	Min.	Typ.	Max.	Units
$t_{RAMP\ IND/COM}$	Power supply ramp rates for all power supplies.	0.01	—	100	V/ms
$t_{RAMP\ AUTO}$	Power supply ramp rates for all power supplies.	0.01	—	40	V/ms

Note:

1. Assumes monotonic ramp rates.

© 2026 Lattice Semiconductor Corp. All Lattice trademarks, registered trademarks, patents, and disclaimers are as listed at www.latticesemi.com/legal.
All other brand or product names are trademarks or registered trademarks of their respective holders. The specifications and information herein are subject to change without notice.

Downloaded from Arrow.com.

3.4. Power-On-Reset Voltage Levels

Table 3.4. Power-On Reset Voltage Levels

Symbol	Parameter	Commercial/Industrial			Automotive			Units
		Min.	Typ.	Max.	Min.	Typ.	Max.	
V_{PORUP}	Power-On-Reset ramp up trip point (band gap based circuit monitoring V_{CCINT} and V_{CCIO0})	0.9	—	1.06	0.9	—	1.06	V
$V_{PORUPEXT}$	Power-On-Reset ramp up trip point (band gap based circuit monitoring external V_{CC} power supply)	1.5	—	2.1	1.5	—	2.1	V
$V_{PORDNBG}$	Power-On-Reset ramp down trip point (band gap based circuit monitoring V_{CCINT})	0.75	—	0.93	0.75	—	1.06	V
$V_{PORDNBGEXT}$	Power-On-Reset ramp down trip point (band gap based circuit monitoring V_{CC})	0.98	—	1.33	0.98	—	1.47	V
$V_{PORDNSRAM}$	Power-On-Reset ramp down trip point (SRAM based circuit monitoring V_{CCINT})	—	0.6	—	—	0.84	—	V
$V_{PORDNSRAMEXT}$	Power-On-Reset ramp down trip point (SRAM based circuit monitoring V_{CC})	—	0.96	—	—	1.16	—	V

Notes:

- These POR trip points are only provided for guidance. Device operation is only characterized for power supply voltages specified under recommended operating conditions.
- For devices without voltage regulators V_{CCINT} is the same as the V_{CC} supply voltage. For devices with voltage regulators, V_{CCINT} is regulated from the V_{CC} supply voltage.
- Note that V_{PORUP} (min.) and $V_{PORDNBG}$ (max.) are in different process corners. For any given process corner $V_{PORDNBG}$ (max.) is always 12.0 mV below V_{PORUP} (min.).
- $V_{PORUPEXT}$ is for HC devices only. In these devices a separate POR circuit monitors the external V_{CC} power supply.
- V_{CCIO0} does not have a Power-On-Reset ramp down trip point. V_{CCIO0} must remain within the Recommended Operating Conditions to ensure proper operation.
- If V_{CCINT} or Vcc fall below VPORDNBG or VPORDNBGEXT (brown-out condition), power supplies should be held at GND for at least 200 µs before powering up.

3.5. Programming/Erase Specifications

Table 3.5. Programming/Erase Specifications

Symbol	Parameter	Commercial/Industrial		Automotive		Units
		Min.	Max.[1]	Min.	Max.	
$N_{PROGCYC}$	Flash Programming cycles per $t_{RETENTION}$	—	10,000	—	1,000	Cycles
	Flash functional programming cycles	—	100,000	—	10,000	
$t_{RETENTION}$	Data retention at 100 °C junction temperature	10	—	10	—	Years

Note:

1. Maximum Flash memory reads are limited to 7.5E13 cycles over the lifetime of the product.

3.6. Hot Socketing Specifications

Table 3.6. Hot Socketing Specifications[1, 2, 3, 4]

Symbol	Parameter	Condition	Max.	Units
I_{DK}	Input or I/O leakage Current	0 < VIN < VIH (MAX)	+/–1000	µA

Notes:

1. Insensitive to sequence of V_{CC} and V_{CCIO}. However, assumes monotonic rise/fall rates for V_{CC} and V_{CCIO}.
2. $0 < V_{CC} < V_{CC}$ (MAX), $0 < V_{CCIO} < V_{CCIO}$ (MAX).
3. I_{DK} is additive to I_{PU}, I_{PD} or I_{BH}.
4. Internal Clamp Diode disabled.

© 2026 Lattice Semiconductor Corp. All Lattice trademarks, registered trademarks, patents, and disclaimers are as listed at www.latticesemi.com/legal.
All other brand or product names are trademarks or registered trademarks of their respective holders. The specifications and information herein are subject to change without notice.

Downloaded from Arrow.com.

3.7. ESD Performance

Refer to the MachXO2 Product Family Qualification Summary for complete qualification data, including ESD performance.

3.8. DC Electrical Characteristics

Over Recommended Operating Conditions

Table 3.7. DC Electrical Characteristics

Symbol	Parameter	Condition	Commercial/Industrial			Automotive			Units
			Min.	Typ.	Max.	Min.	Typ.	Max.	
I_{IL}, I_{IH}[1, 4]	Input or I/O Leakage	Clamp OFF and $V_{CCIO} < V_{IN} < V_{IH}$ (MAX)	—	—	+175	—	—	+175	µA
		Clamp OFF and $V_{IN} = V_{CCIO}$	–10	—	10	–10	—	11	µA
		Clamp OFF and VCCIO –0.97 V < $V_{IN} < V_{CCIO}$	–175	—	—	–175	—	—	µA
		Clamp OFF and 0 V < $V_{IN} < V_{CCIO}$ – 0.97 V	—	—	10	—	—	10	µA
		Clamp OFF and V_{IN} = GND	—	—	10	—	—	10	µA
		Clamp ON and 0 V < $V_{IN} < V_{CCIO}$	—	—	10	—	—	11	µA
I_{PU}	I/O Active Pull-up Current	0 < V_{IN} < 0.7 V_{CCIO}	–309	—	–26	–309	—	–26	µA
I_{PD}	I/O Active Pull-down Current	V_{IL} (MAX) < $V_{IN} < V_{CCIO}$	30	—	305	30	—	305	µA
I_{BHLS}	Bus Hold Low sustaining current	$V_{IN} = V_{IL}$ (MAX)	30	—	—	30	—	—	µA
I_{BHHS}	Bus Hold High sustaining current	V_{IN} = 0.7 V_{CCIO}	–30	—	—	–27	—	—	µA
I_{BHLO}	Bus Hold Low Overdrive current	$0 \leq V_{IN} \leq V_{CCIO}$	—	—	305	—	—	305	µA
I_{BHHO}	Bus Hold High Overdrive current	$0 \leq V_{IN} \leq V_{CCIO}$	—	—	–309	—	—	–309	µA
V_{BHT}[3]	Bus Hold Trip Points	—	V_{IL} (MAX)	—	V_{IH} (MIN)	V_{IL} (MAX)	—	V_{IH} (MIN)	V
C1	I/O Capacitance[2]	V_{CCIO} = 3.3 V, 2.5 V, 1.8 V, 1.5 V, 1.2 V, V_{CC} = Typ., V_{IO} = 0 to V_{IH} (MAX)	3	5	9	3	5	9	pF
V_{HYST}	Hysteresis for Schmitt Trigger Inputs[5]	V_{CCIO} = 3.3 V, Hysteresis = Large	—	450	—	—	450	—	mV
		V_{CCIO} = 2.5 V, Hysteresis = Large	—	250	—	—	250	—	mV
		V_{CCIO} = 1.8 V, Hysteresis = Large	—	125	—	—	125	—	mV
		V_{CCIO} = 1.5 V, Hysteresis = Large	—	100	—	—	100	—	mV
		V_{CCIO} = 3.3 V, Hysteresis = Small	—	250	—	—	250	—	mV
		V_{CCIO} = 2.5 V, Hysteresis = Small	—	150	—	—	150	—	mV
		V_{CCIO} = 1.8 V, Hysteresis = Small	—	60	—	—	60	—	mV
		V_{CCIO} = 1.5 V, Hysteresis = Small	—	40	—	—	40	—	mV

Notes:

1. Input or I/O leakage current is measured with the pin configured as an input or as an I/O with the output driver tri-stated. It is not measured with the output driver active. Bus maintenance circuits are disabled.
2. T_A 25 °C, f = 1.0 MHz.
3. Refer to V_{IL} and V_{IH} in the sysI/O Single-Ended DC Electrical Characteristics table of this document.

© 2026 Lattice Semiconductor Corp. All Lattice trademarks, registered trademarks, patents, and disclaimers are as listed at www.latticesemi.com/legal.
All other brand or product names are trademarks or registered trademarks of their respective holders. The specifications and information herein are subject to change without notice.

Downloaded from Arrow.com.

4. When V_{IH} is higher than V_{CCIO}, a transient current typically of 30 ns in duration or less with a peak current of 6 mA can occur on the high-tolow transition. For true LVDS output pins in MachXO2-640U, MachXO2-1200/U and larger devices, VIH must be less than or equal to V_{CCIO}.
5. With bus keeper circuit turned on. For more details, refer to MachXO2 sysIO Usage Guide (FPGA-TN-02158).

3.9. Static Supply Current – ZE Devices

Table 3.8. Static Supply Current – ZE Devices[1, 2, 3, 6]

Symbol	Parameter	Device	Typ.[4]	Units
I_{CC}	Core Power Supply	MachXO2-256ZE	18	µA
		MachXO2-640ZE	28	µA
		MachXO2-1200ZE	56	µA
		MachXO2-2000ZE	80	µA
		MachXO2-4000ZE	124	µA
		MachXO2-7000ZE	189	µA
I_{CCIO}	Bank Power Supply[5] V_{CCIO} = 2.5 V	All devices	1	µA

Notes:
1. For further information on supply current, refer to Power Estimation and Management for MachXO2 Devices (TN1198).
2. Assumes programmed blank pattern with the following characteristics: all outputs are tri-stated, all inputs configured as LVCMOS and held at V_{CCIO} or GND, on-chip oscillator is off, and on-chip PLL is off. To estimate power for your specific case, refer to the Power Calculator tool.
3. Frequency = 0 MHz.
4. T_J = 25°C, power supplies at nominal voltage.
5. Does not include pull-up/pull-down.
6. To determine the MachXO2 peak start-up current data, use the Power Calculator tool.

3.10. Static Power Consumption Contribution of Different Components – ZE Devices

Table 3.9 can be used for approximating static power consumption. For a more accurate power analysis for your design, use the Power Calculator tool.

Table 3.9. Static Power Consumption Contribution of Different Components – ZE Devices

Symbol	Parameter	Typ.	Units
IDCBG	Bandgap DC power contribution	101	µA
IDCPOR	POR DC power contribution	38	µA
IDCIOBANKCONTROLLER	DC power contribution per I/O bank controller	143	µA

© 2026 Lattice Semiconductor Corp. All Lattice trademarks, registered trademarks, patents, and disclaimers are as listed at www.latticesemi.com/legal.
All other brand or product names are trademarks or registered trademarks of their respective holders. The specifications and information herein are subject to change without notice.

Downloaded from Arrow.com.

3.11. Static Supply Current – HC/HE Devices

Table 3.10. Static Supply Current – HC/HE Devices[1, 2, 3, 6]

Symbol	Parameter	Device	Typ.[4]	Units
I_{CC}	Core Power Supply	MachXO2-256HC	1.15	mA
		MachXO2-640HC	1.84	mA
		MachXO2-640UHC	3.48	mA
		MachXO2-1200HC	3.49	mA
		MachXO2-1200UHC	4.80	mA
		MachXO2-2000HC	4.80	mA
		MachXO2-2000UHC	8.44	mA
		MachXO2-4000HC	8.45	mA
		MachXO2-7000HC	12.87	mA
		MachXO2-2000HE	1.39	mA
		MachXO2-4000HE	2.55	mA
		MachXO2-7000HE	4.06	mA
I_{CCIO}	Bank Power Supply[5] V_{CCIO} = 2.5 V	All devices	0	mA

Notes:

1. For further information on supply current, refer to Power Estimation and Management for MachXO2 Devices (TN1198).
2. Assumes programmed blank pattern with the following characteristics: all outputs are tri-stated, all inputs configured as LVCMOS and held at V_{CCIO} or GND, on-chip oscillator is off, and on-chip PLL is off. To estimate power for your specific case, refer to the Power Calculator tool.
3. Frequency = 0 MHz.
4. T_J = 25 °C, power supplies at nominal voltage.
5. Does not include pull-up/pull-down.
6. To determine the MachXO2 peak start-up current data, use the Power Calculator tool.

3.12. Programming and Erase Flash Supply Current – HC/HE Devices

Table 3.11. Programming and Erase Flash Supply Current – HC/HE Devices[1, 2, 3, 4]

Symbol	Parameter	Device	Typ.[5]	Units
I_{CC}	Core Power Supply	MachXO2-256HC	14.6	mA
		MachXO2-640HC	16.1	mA
		MachXO2-640UHC	18.8	mA
		MachXO2-1200HC	18.8	mA
		MachXO2-1200UHC	22.1	mA
		MachXO2-2000HC	22.1	mA
		MachXO2-2000UHC	26.8	mA
		MachXO2-4000HC	26.8	mA
		MachXO2-7000HC	33.2	mA
		MachXO2-2000HE	18.3	mA
		MachXO2-2000UHE	20.4	mA
		MachXO2-4000HE	20.4	mA
		MachXO2-7000HE	23.9	mA
I_{CCIO}	Bank Power Supply[6]	All devices	0	mA

Notes:

1. For further information on supply current, refer to Power Estimation and Management for MachXO2 Devices (TN1198).
2. Assumes all inputs are held at V_{CCIO} or GND and all outputs are tri-stated.
3. Typical user pattern.
4. JTAG programming is at 25 MHz.

© 2026 Lattice Semiconductor Corp. All Lattice trademarks, registered trademarks, patents, and disclaimers are as listed at www.latticesemi.com/legal.
All other brand or product names are trademarks or registered trademarks of their respective holders. The specifications and information herein are subject to change without notice.

Downloaded from Arrow.com.

5. T_J = 25 °C, power supplies at nominal voltage.
6. Per bank. V_{CCIO} = 2.5 V. Does not include pull-up/pull-down.

3.13. Programming and Erase Flash Supply Current – ZE Devices

Table 3.12. Programming and Erase Flash Supply Current – ZE Devices[1, 2, 3, 4]

Symbol	Parameter	Device	Typ.[5]	Units
I_{CC}	Core Power Supply	MachXO2-256ZE	13	mA
		MachXO2-640ZE	14	mA
		MachXO2-1200ZE	15	mA
		MachXO2-2000ZE	17	mA
		MachXO2-4000ZE	18	mA
		MachXO2-7000ZE	20	mA
I_{CCIO}	Bank Power Supply[6]	All devices	0	mA

Notes:
1. For further information on supply current, refer to Power Estimation and Management for MachXO2 Devices (TN1198).
2. Assumes all inputs are held at V_{CCIO} or GND and all outputs are tri-stated.
3. Typical user pattern.
4. JTAG programming is at 25 MHz.
5. TJ = 25 °C, power supplies at nominal voltage.
6. Per bank. V_{CCIO} = 2.5 V. Does not include pull-up/pull-down.

3.14. sysI/O Recommended Operating Conditions

Table 3.13. sysI/O Recommended Operating Conditions

Standard	V_{CCIO} (V)			V_{REF} (V)		
	Min.	Typ.	Max.	Min.	Typ.	Max.
LVCMOS 3.3	3.135	3.3	3.6	—	—	—
LVCMOS 2.5	2.375	2.5	2.625	—	—	—
LVCMOS 1.8	1.71	1.8	1.89	—	—	—
LVCMOS 1.5	1.425	1.5	1.575	—	—	—
LVCMOS 1.2	1.14	1.2	1.26	—	—	—
LVTTL	3.135	3.3	3.6	—	—	—
PCI[3]	3.135	3.3	3.6	—	—	—
SSTL25	2.375	2.5	2.625	1.15	1.25	1.35
SSTL18	1.71	1.8	1.89	0.833	0.9	0.969
HSTL18	1.71	1.8	1.89	0.816	0.9	1.08
LVCMOS25R33	3.135	3.3	3.6	1.1	1.25	1.4
LVCMOS18R33	3.135	3.3	3.6	0.75	0.9	1.05
LVCMOS18R25	2.375	2.5	2.625	0.75	0.9	1.05
LVCMOS15R33	3.135	3.3	3.6	0.6	0.75	0.9
LVCMOS15R25	2.375	2.5	2.625	0.6	0.75	0.9
LVCMOS12R33[4]	3.135	3.3	3.6	0.45	0.6	0.75
LVCMOS12R25[4]	2.375	2.5	2.625	0.45	0.6	0.75
LVCMOS10R33[4]	3.135	3.3	3.6	0.35	0.5	0.65
LVCMOS10R25[4]	2.375	2.5	2.625	0.35	0.5	0.65
LVDS25[1, 2]	2.375	2.5	2.625	—	—	—
LVDS33[1, 2]	3.135	3.3	3.6	—	—	—
LVPECL[1]	3.135	3.3	3.6	—	—	—

© 2026 Lattice Semiconductor Corp. All Lattice trademarks, registered trademarks, patents, and disclaimers are as listed at www.latticesemi.com/legal.
All other brand or product names are trademarks or registered trademarks of their respective holders. The specifications and information herein are subject to change without notice.

Downloaded from Arrow.com.

Standard	V_{CCIO} (V)			V_{REF} (V)		
	Min.	Typ.	Max.	Min.	Typ.	Max.
BLVDS[1]	2.375	2.5	2.625	—	—	—
RSDS[1]	2.375	2.5	2.625			
SSTL18D	1.71	1.8	1.89	0.833	0.9	0.969
SSTL25D	2.375	2.5	2.625	1.15	1.25	1.35
HSTL18D	1.71	1.8	1.89	0.816	0.9	1.08

Notes:

1. Inputs on-chip. Outputs are implemented with the addition of external resistors.
2. MachXO2-640U, MachXO2-1200/U and larger devices have dedicated LVDS buffers.
3. Input on the bottom bank of the MachXO2-640U, MachXO2-1200/U and larger devices only.
4. Supported only for inputs and BIDIs for all ZE devices, and –6 speed grade for HE and HC devices.

3.15. sysI/O Single-Ended DC Electrical Characteristics

Table 3.14. sysI/O Single-Ended DC Electrical Characteristics[1, 2]

Input/Output Standard	V_{IL}		V_{IH}		V_{OL} Max. (V)	V_{OH} Min. (V)	I_{OL} Max.[4] (mA)	I_{OH} Max.[4] (mA)
	Min. (V)[3]	Max. (V)	Min. (V)	Max. (V)				
LVCMOS 3.3 LVTTL	-0.3	0.8[5]	2.0	3.6	0.4	V_{CCIO} – 0.4	4	–4
							8	–8
							12	–12
							16	–16
							24	–24
					0.2	V_{CCIO} – 0.2	0.1	–0.1
LVCMOS 2.5	–0.3	0.7[5]	1.7	3.6	0.4	V_{CCIO} – 0.4	4	–4
							8	–8
							12	–12
							16	–16
					0.2	V_{CCIO} – 0.2	0.1	–0.1
LVCMOS 1.8	–0.3	0.35 V_{CCIO}[5]	0.65 V_{CCIO}	3.6	0.4	V_{CCIO} – 0.4	4	–4
							8	–8
							12	–12
					0.2	V_{CCIO} – 0.2	0.1	–0.1
LVCMOS 1.5	–0.3	0.35 V_{CCIO}	0.65 V_{CCIO}	3.6	0.4	V_{CCIO} – 0.4	4	–4
							8	–8
					0.2	V_{CCIO} – 0.2	0.1	–0.1
LVCMOS 1.2	–0.3	0.35 V_{CCIO}	0.65 V_{CCIO}	3.6	0.4	V_{CCIO} – 0.4	4	–2
							8	–6
					0.2	V_{CCIO} – 0.2	0.1	–0.1
PCI	–0.3	0.3 V_{CCIO}	0.5 V_{CCIO}	3.6	0.1 V_{CCIO}	0.9 V_{CCIO}	1.5	–0.5
SSTL25 Class I	–0.3	V_{REF} – 0.18	V_{REF} + 0.18	3.6	0.54	V_{CCIO} - 0.62	8	8
SSTL25 Class II	–0.3	V_{REF} – 0.18	V_{REF} + 0.18	3.6	NA	NA	NA	NA
SSTL18 Class I	–0.3	V_{REF} – 0.125	V_{REF} + 0.125	3.6	0.40	V_{CCIO} - 0.40	8	8
SSTL18 Class II	–0.3	V_{REF} – 0.125	V_{REF} + 0.125	3.6	NA	NA	NA	NA
HSTL18 Class I	–0.3	V_{REF} – 0.1	V_{REF} + 0.1	3.6	0.40	V_{CCIO} - 0.40	8	8
HSTL18 Class II	–0.3	V_{REF} – 0.1	V_{REF} + 0.1	3.6	NA	NA	NA	NA

© 2026 Lattice Semiconductor Corp. All Lattice trademarks, registered trademarks, patents, and disclaimers are as listed at www.latticesemi.com/legal.
All other brand or product names are trademarks or registered trademarks of their respective holders. The specifications and information herein are subject to change without notice.

Downloaded from Arrow.com.

Input/Output Standard	V_{IL}		V_{IH}		V_{OL} Max. (V)	V_{OH} Min. (V)	I_{OL} Max.[4] (mA)	I_{OH} Max.[4] (mA)
	Min. (V)[3]	Max. (V)	Min. (V)	Max. (V)				
LVCMOS25R33	–0.3	V_{REF} – 0.1	V_{REF} + 0.1	3.6	NA	NA	NA	NA
LVCMOS18R33	–0.3	V_{REF} – 0.1	V_{REF} + 0.1	3.6	NA	NA	NA	NA
LVCMOS18R25	–0.3	V_{REF} – 0.1	V_{REF} + 0.1	3.6	NA	NA	NA	NA
LVCMOS15R33	–0.3	V_{REF} – 0.1	V_{REF} + 0.1	3.6	NA	NA	NA	NA
LVCMOS15R25	–0.3	V_{REF} – 0.1	V_{REF} + 0.1	3.6	NA	NA	NA	NA
LVCMOS12R33	–0.3	V_{REF} – 0.1	V_{REF} + 0.1	3.6	0.40	NA Open Drain	24, 16, 12, 8, 4	NA Open Drain
LVCMOS12R25	–0.3	V_{REF} – 0.1	V_{REF} + 0.1	3.6	0.40	NA Open Drain	16, 12, 8, 4	NA Open Drain
LVCMOS10R33	–0.3	V_{REF} – 0.1	V_{REF} + 0.1	3.6	0.40	NA Open Drain	24, 16, 12, 8, 4	NA Open Drain
LVCMOS10R25	–0.3	V_{REF} – 0.1	V_{REF} + 0.1	3.6	0.40	NA Open Drain	16, 12, 8, 4	NA Open Drain

Notes:

1. MachXO2 devices allow LVCMOS inputs to be placed in I/O banks where V_{CCIO} is different from what is specified in the applicable JEDEC specification. This is referred to as a ratioed input buffer. In a majority of cases this operation follows or exceeds the applicable JEDEC specification. The cases where MachXO2 devices do not meet the relevant JEDEC specification are documented in the table below.
2. MachXO2 devices allow for LVCMOS referenced I/O which follow applicable JEDEC specifications. For more details about mixed mode operation, refer to MachXO2 sysIO Usage Guide (FPGA-TN-02158).
3. The dual function I2C pins SCL and SDA are limited to a V_{IL} min of –0.25 V or to –0.3 V with a duration of <20 ns.
4. For electromigration, the average DC current sourced or sinked by I/O pads between two consecutive VCCIO or GND pad connections, or between the last VCCIO or GND in an I/O bank and the end of an I/O bank, as shown in the Logic Signal Connections table (also shown as I/O grouping) shall not exceed a maximum of n * 8 mA. “n” is the number of I/O pads between the two consecutive bank VCCIO or GND connections or between the last VCCIO and GND in a bank and the end of a bank. I/O Grouping can be found in the Data Sheet Pin Tables, which can also be generated from the Lattice Diamond software.
5. When using LVCMOS33, LVCMOS25, or LVCMOS18 with VCCIO = 1.5 V, VIL Max is specified in Table 3.15.

Table 3.15. Mixed Voltage LVCMOS Input Standards when V_{CCIO} = 1.5 V

Input Standard	V_{CCIO} (V)	V_{IL} Max. (V)
LVCMOS 33	1.5	0.685
LVCMOS 25	1.5	0.687
LVCMOS 18	1.5	0.655

© 2026 Lattice Semiconductor Corp. All Lattice trademarks, registered trademarks, patents, and disclaimers are as listed at www.latticesemi.com/legal.
All other brand or product names are trademarks or registered trademarks of their respective holders. The specifications and information herein are subject to change without notice.

Downloaded from Arrow.com.

3.16. sysI/O Differential Electrical Characteristics

The LVDS differential output buffers are available on the top side of MachXO2-640U, MachXO2-1200/U and higher density devices in the MachXO2 PLD family.

3.16.1. LVDS

Table 3.16. LVDS

Parameter Symbol	Parameter Description	Test Conditions	Min.	Typ.	Max.	Units
V_{INP}, V_{INM}	Input Voltage (Commercial/Industrial)	V_{CCIO} = 3.3 V	0	—	2.605	V
		V_{CCIO} = 2.5 V	0	—	2.05	V
	Input Voltage (Automotive)	V_{CCIO} = 3.3 V	0	—	2.6	V
		V_{CCIO} = 2.5 V	0	—	2.0	V
V_{THD}	Differential Input Threshold	—	±100	—		mV
V_{CM}	Input Common Mode Voltage	V_{CCIO} = 3.3 V	0.05	—	2.6	V
		V_{CCIO} = 2.5 V	0.05	—	2.0	V
I_{IN}	Input current	Power on	—	—	±10	µA
V_{OH}	Output high voltage for V_{OP} or V_{OM}	R_T = 100 Ω	—	1.375	—	V
V_{OL}	Output low voltage for V_{OP} or V_{OM}	R_T = 100 Ω	0.90	1.025	—	V
V_{OD}	Output voltage differential	(V_{OP} - V_{OM}), R_T = 100 Ω	250	350	450	mV
ΔV_{OD}	Change in V_{OD} between high and low	—	—	—	50	mV
V_{OS}	Output voltage offset (Commercial/Industrial)	(V_{OP} + V_{OM})/2, R_T = 100 Ω	1.125	1.20	1.395	V
	Output voltage offset (Automotive)	(V_{OP} - V_{OM})/2, R_T = 100 Ω	1.10	1.20	1.395	V
ΔV_{OS}	Change in V_{OS} between H and L	—	—	—	50	mV
I_{OSD}	Output short circuit current	V_{OD} = 0 V driver outputs shorted	—	—	24	mA

3.16.2. LVDS Emulation

MachXO2 devices can support LVDS outputs through emulation (LVDS25E). The output is emulated using complementary LVCMOS outputs in conjunction with resistors across the driver outputs on all devices. The scheme shown in Figure 3.1 is one possible solution for LVDS standard implementation. Resistor values in Figure 3.1 are industry standard values for 1% resistors.

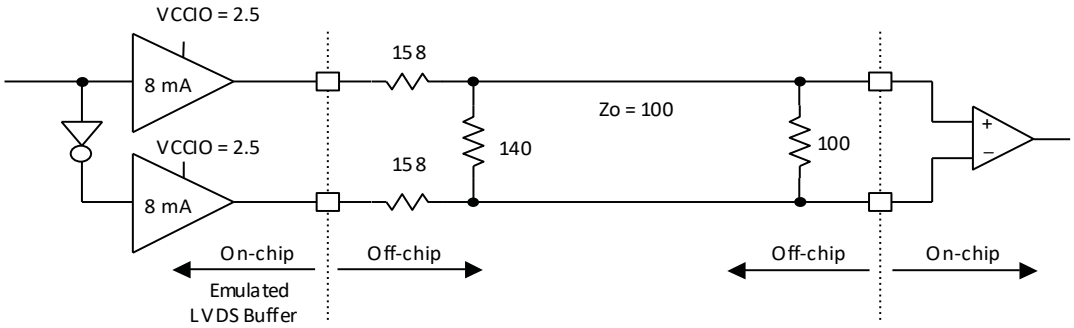

Note: All resistors are ±1%.

Figure 3.1. LVDS Using External Resistors (LVDS25E)

© 2026 Lattice Semiconductor Corp. All Lattice trademarks, registered trademarks, patents, and disclaimers are as listed at www.latticesemi.com/legal.
All other brand or product names are trademarks or registered trademarks of their respective holders. The specifications and information herein are subject to change without notice.

Downloaded from Arrow.com.

Table 3.17. LVDS25E DC Conditions

Parameter	Description	Typ.	Units
Z_{OUT}	Output impedance	20	Ω
R_S	Driver series resistor	158	Ω
R_P	Driver parallel resistor	140	Ω
R_T	Receiver termination	100	Ω
V_{OH}	Output high voltage	1.43	V
V_{OL}	Output low voltage	1.07	V
V_{OD}	Output differential voltage	0.35	V
V_{CM}	Output common mode voltage	1.25	V
Z_{BACK}	Back impedance	100.5	Ω
I_{DC}	DC output current	6.03	mA

3.16.3. BLVDS

The MachXO2 family supports the BLVDS standard through emulation. The output is emulated using complementary LVCMOS outputs in conjunction with resistors across the driver outputs. The input standard is supported by the LVDS differential input buffer. BLVDS is intended for use when multi-drop and bi-directional multi-point differential signaling is required. The scheme shown in Figure 3.2 is one possible solution for bi-directional multi-point differential signals.

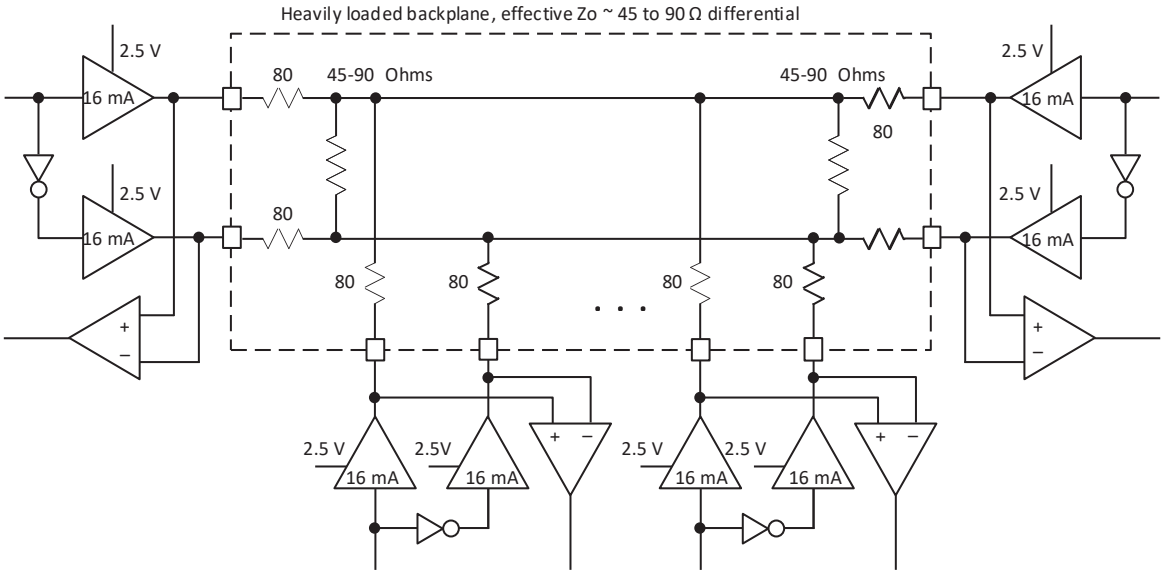

Figure 3.2. BLVDS Multi-point Output Example

© 2026 Lattice Semiconductor Corp. All Lattice trademarks, registered trademarks, patents, and disclaimers are as listed at www.latticesemi.com/legal.
All other brand or product names are trademarks or registered trademarks of their respective holders. The specifications and information herein are subject to change without notice.

Downloaded from Arrow.com.

Table 3.18. BLVDS DC Conditions[1]

Symbol	Description	Nominal		Units
		Zo = 45	Zo = 90	
Z_{OUT}	Output impedance	20	20	Ω
R_S	Driver series resistance	80	80	Ω
R_{TLEFT}	Left end termination	45	90	Ω
R_{TRIGHT}	Right end termination	45	90	Ω
V_{OH}	Output high voltage	1.376	1.480	V
V_{OL}	Output low voltage	1.124	1.020	V
V_{OD}	Output differential voltage	0.253	0.459	V
V_{CM}	Output common mode voltage	1.250	1.250	V
I_{DC}	DC output current	11.236	10.204	mA

Note:

1. For input buffer, see Table 3.16.

3.16.4. LVPECL

The MachXO2 family supports the differential LVPECL standard through emulation. This output standard is emulated using complementary LVCMOS outputs in conjunction with resistors across the driver outputs on all the devices. The LVPECL input standard is supported by the LVDS differential input buffer. The scheme shown in Differential LVPECL is one possible solution for point-to-point signals.

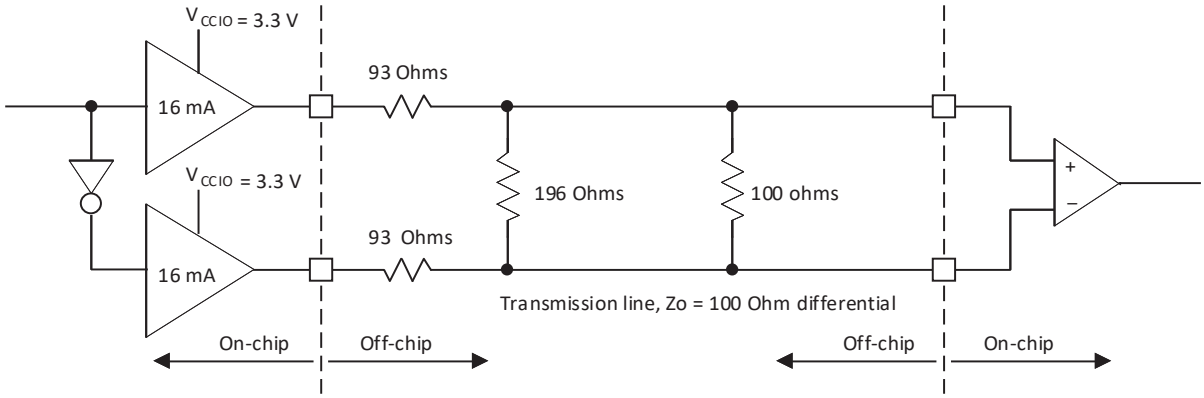

Figure 3.3. Differential LVPECL

Table 3.19. LVPECL DC Conditions[1]

Symbol	Description	Nominal	Units
Z_{OUT}	Output impedance	20	Ω
R_S	Driver series resistor	93	Ω
R_P	Driver parallel resistor	196	Ω
R_T	Receiver termination	100	Ω
V_{OH}	Output high voltage	2.05	V
V_{OL}	Output low voltage	1.25	V
V_{OD}	Output differential voltage	0.80	V
V_{CM}	Output common mode voltage	1.65	V
Z_{BACK}	Back impedance	100.5	Ω
I_{DC}	DC output current	12.11	mA

Note:

1. For input buffer, see Table 3.16.

© 2026 Lattice Semiconductor Corp. All Lattice trademarks, registered trademarks, patents, and disclaimers are as listed at www.latticesemi.com/legal.
All other brand or product names are trademarks or registered trademarks of their respective holders. The specifications and information herein are subject to change without notice.

Downloaded from Arrow.com.

For further information on LVPECL, BLVDS and other differential interfaces, see details of additional technical documentation at the end of the data sheet.

3.16.5. RSDS

The MachXO2 family supports the differential RSDS standard. The output standard is emulated using complementary LVCMOS outputs in conjunction with resistors across the driver outputs on all the devices. The RSDS input standard is supported by the LVDS differential input buffer. The scheme shown in Figure 3.4 is one possible solution for RSDS standard implementation. Use LVDS25E mode with suggested resistors for RSDS operation. Resistor values in Figure 3.4 are industry standard values for 1% resistors.

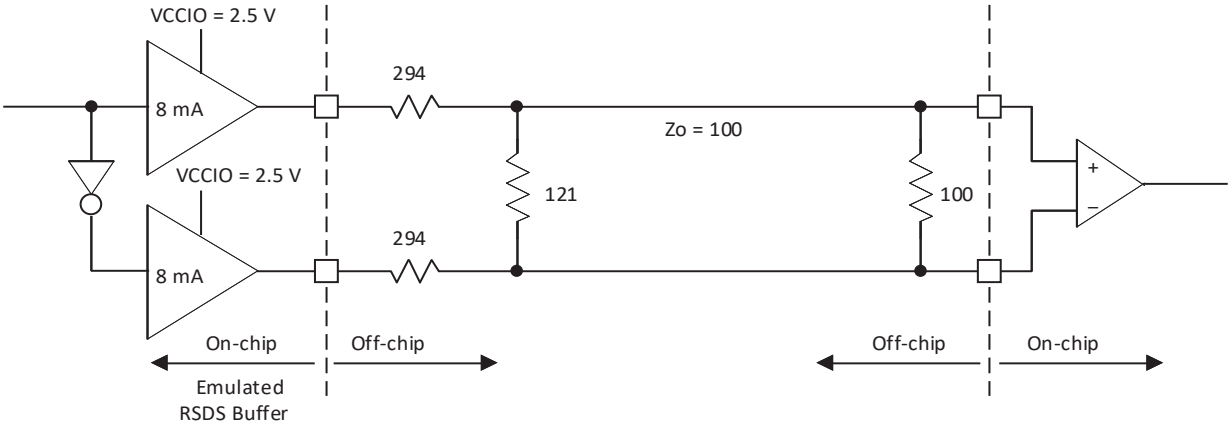

Figure 3.4. RSDS (Reduced Swing Differential Standard)

Table 3.20. RSDS DC Conditions

Parameter	Description	Typical	Units
Z_{OUT}	Output impedance	20	Ω
R_S	Driver series resistor	294	Ω
R_P	Driver parallel resistor	121	Ω
R_T	Receiver termination	100	Ω
V_{OH}	Output high voltage	1.35	V
V_{OL}	Output low voltage	1.15	V
V_{OD}	Output differential voltage	0.20	V
V_{CM}	Output common mode voltage	1.25	V
Z_{BACK}	Back impedance	101.5	Ω
I_{DC}	DC output current	3.66	mA

3.16.6. Comparator Function

MachXO2 devices can support a limited comparator function using the 3.3 V referenced input buffers. The scheme is shown in Figure 3.5.

© 2026 Lattice Semiconductor Corp. All Lattice trademarks, registered trademarks, patents, and disclaimers are as listed at www.latticesemi.com/legal.
All other brand or product names are trademarks or registered trademarks of their respective holders. The specifications and information herein are subject to change without notice.

Downloaded from Arrow.com.

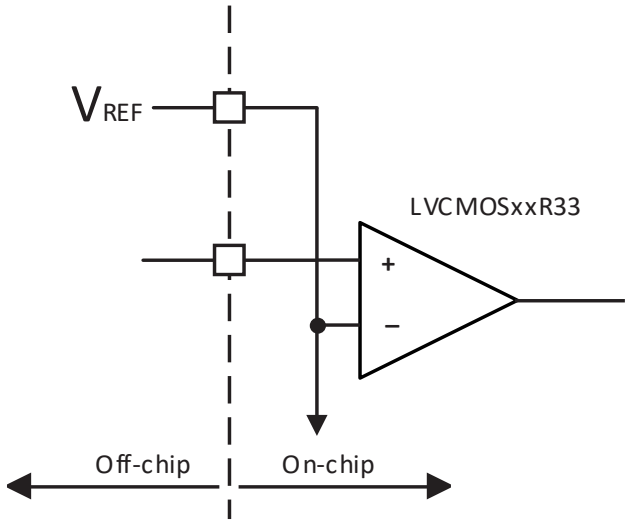

Figure 3.5. Comparator Function Using Referenced Input Buffers

Over recommended operating conditions.

Table 3.21. Comparator Specifications[1]

Parameter	Description	Test Condition	–6/–5 (Commercial/Industrial)		–5 (Automotive)		Unit
			Min.	Max.	Min.	Max.	
V_{IH}	Single-Ended input	V_{CCIO} = 3.3 V	V_{REF} + 0.1	3.6	V_{REF} + 0.1	3.6	MHz
V_{IL}			–0.3	V_{REF} – 0.1	–0.3	V_{REF} – 0.1	
V_{ref}	Voltage Ref input	V_{CCIO} = 3.3 V	0.05	2.605	0.05	2.605	V
t_{W_PRI}	Propagation Delay	V_{CCIO} = 3.3 V	—	10	—	10	ns
V_{OS}	Input Offset Voltage	V_{CCIO} = 3.3 V	–100	100	–105	105	mV

Note:

1. Comparator function supported for 3.3 V Referenced Input Buffer types LVCMOS25R33, LVCMOS18R33, LVCMOS15R33, LVCMOS12R33, and LVCMOS10R33.

3.17. Typical Building Block Function Performance – HC/HE Devices

3.17.1. Pin-to-Pin Performance (LVCMOS25 12 mA Drive)

Table 3.22. Pin-to-Pin Performance (LVCMOS25 12 mA Drive)

Function	–6 Timing	Units
Basic Functions		
16-bit decoder	8.9	ns
4:1 MUX	7.5	ns
16:1 MUX	8.3	ns

3.17.2. Register-to-Register Performance

Table 3.23. Register-to-Register Performance[1]

Function	–6 Timing	Units
Basic Functions		
16:1 MUX	412	MHz
16-bit adder	297	MHz

© 2026 Lattice Semiconductor Corp. All Lattice trademarks, registered trademarks, patents, and disclaimers are as listed at www.latticesemi.com/legal.
All other brand or product names are trademarks or registered trademarks of their respective holders. The specifications and information herein are subject to change without notice.

Downloaded from Arrow.com.

Function	–6 Timing	Units
16-bit counter	324	MHz
64-bit counter	161	MHz
Embedded Memory Functions		
1024 × 9 True-Dual Port RAM (Write Through or Normal, EBR output registers)	183	MHz
Distributed Memory Functions		
16 × 4 Pseudo-Dual Port RAM (one PFU)	500	MHz

Note:

1. The above timing numbers are generated using the Diamond design tool. Exact performance may vary with device and tool version. The tool uses internal parameters that have been characterized but are not tested on every device. Commercial timing numbers are shown at 85 °C and 1.14 V. Other operating conditions, including industrial and automotive, can be extracted from the Diamond software.

3.18. Typical Building Block Function Performance – ZE Devices

3.18.1. Pin-to-Pin Performance (LVCMOS25 12 mA Drive)

Table 3.24. Pin-to-Pin Performance (LVCMOS25 12 mA Drive)

Function	-6 Timing	Units
Basic Functions		
16-bit decoder	8.9	ns
4:1 MUX	7.5	ns
16:1 MUX	8.3	ns

3.18.2. Register-to-Register Performance

Table 3.25. Register-to-Register Performance[1]

Function	-6 Timing	Units
Basic Functions		
16:1 MUX	412	MHz
16-bit adder	297	MHz
16-bit counter	324	MHz
64-bit counter	161	MHz
Embedded Memory Functions		
1024x9 True-Dual Port RAM (Write Through or Normal, EBR output registers)	183	MHz
Distributed Memory Functions		
16x4 Pseudo-Dual Port RAM (one PFU)	500	MHz

Note:

1. The above timing numbers are generated using the Diamond design tool. Exact performance may vary with device and tool version. The tool uses internal parameters that have been characterized but are not tested on every device.

3.19. Derating Logic Timing

Logic timing provided in the following sections of the data sheet and the Lattice design tools are worst case numbers in the operating range. Actual delays may be much faster. Lattice design tools can provide logic timing numbers at a particular temperature and voltage.

© 2026 Lattice Semiconductor Corp. All Lattice trademarks, registered trademarks, patents, and disclaimers are as listed at www.latticesemi.com/legal.
All other brand or product names are trademarks or registered trademarks of their respective holders. The specifications and information herein are subject to change without notice.

Downloaded from Arrow.com.

3.20. Maximum sysI/O Buffer Performance

Table 3.26. Maximum sysI/O Buffer Performance

I/O Standard	Max. Speed	Units
LVDS25	400	MHz
LVDS25E	150	MHz
RSDS25	150	MHz
RSDS25E	150	MHz
BLVDS25	150	MHz
BLVDS25E	150	MHz
MLVDS25	150	MHz
MLVDS25E	150	MHz
LVPECL33	150	MHz
LVPECL33E	150	MHz
SSTL25_I	150	MHz
SSTL25_II	150	MHz
SSTL25D_I	150	MHz
SSTL25D_II	150	MHz
SSTL18_I	150	MHz
SSTL18_II	150	MHz
SSTL18D_I	150	MHz
SSTL18D_II	150	MHz
HSTL18_I	150	MHz
HSTL18_II	150	MHz
HSTL18D_I	150	MHz
HSTL18D_II	150	MHz
PCI33	134	MHz
LVTTL33	150	MHz
LVTTL33D	150	MHz
LVCMOS33	150	MHz
LVCMOS33D	150	MHz
LVCMOS25	150	MHz
LVCMOS25D	150	MHz
LVCMOS25R33	150	MHz
LVCMOS18	150	MHz
LVCMOS18D	150	MHz
LVCMOS18R33	150	MHz
LVCMOS18R25	150	MHz
LVCMOS15	150	MHz
LVCMOS15D	150	MHz
LVCMOS15R33	150	MHz
LVCMOS15R25	150	MHz
LVCMOS12	91	MHz
LVCMOS12D	91	MHz

© 2026 Lattice Semiconductor Corp. All Lattice trademarks, registered trademarks, patents, and disclaimers are as listed at www.latticesemi.com/legal.
All other brand or product names are trademarks or registered trademarks of their respective holders. The specifications and information herein are subject to change without notice.

Downloaded from Arrow.com.

3.21. MachXO2 External Switching Characteristics – HC/HE Devices

Over Recommended Operating Conditions

Table 3.27. MachXO2 External Switching Characteristics – HC/HE Devices[1, 2, 3, 4, 5, 6, 7]

Parameter	Description	Device	–6 Commercial/Industrial		–5 Commercial/Industrial		–4 Commercial/Industrial		–5 Automotive		Unit
			Min	Max	Min	Max	Min	Max	Min	Max	
Clocks											
Primary Clocks											
f_{MAX_PRI}[8]	Frequency for Primary Clock Tree	All MachXO2 devices	—	388	—	323	—	269	—	323	MHz
t_{W_PRI}	Clock Pulse Width for Primary Clock	All MachXO2 devices	0.5	—	0.6	—	0.7	—	0.6	—	ns
t_{SKEW_PRI}	Primary Clock Skew Within a Device	MachXO2-256HC-HE	—	912	—	939	—	975	—	939	ps
		MachXO2-640HC-HE	—	844	—	871	—	908	—	871	ps
		MachXO2-1200HC-HE	—	868	—	902	—	951	—	—	ps
		MachXO2-2000HC-HE	—	867	—	897	—	941	—	—	ps
		MachXO2-4000HC-HE	—	865	—	892	—	931	—	—	ps
		MachXO2-7000HC-HE	—	902	—	942	—	989	—	—	ps
Edge Clocks											
f_{MAX_EDGE}[8]	Frequency for Edge Clock	MachXO2-1200 and larger devices	—	400	—	333	—	278	—	333	MHz
Pin-LUT-Pin Propagation Delay											
t_{PD}	Best case propagation delay through one LUT-4	All MachXO2 devices	—	6.72	—	6.96	—	7.24	—	6.96	ns
General I/O Pin Parameters (Using Primary Clock without PLL)											
t_{CO}	Clock to Output – PIO Output Register	MachXO2-256HC-HE	—	7.13	—	7.30	—	7.57	—	7.66	ns
		MachXO2-640HC-HE	—	7.15	—	7.30	—	7.57	—	7.66	ns
		MachXO2-1200HC-HE	—	7.44	—	7.64	—	7.94	—	—	ns
		MachXO2-2000HC-HE	—	7.46	—	7.66	—	7.96	—	—	ns
		MachXO2-4000HC-HE	—	7.51	—	7.71	—	8.01	—	—	ns
		MachXO2-7000HC-HE	—	7.54	—	7.75	—	8.06	—	—	ns

© 2026 Lattice Semiconductor Corp. All Lattice trademarks, registered trademarks, patents, and disclaimers are as listed at www.latticesemi.com/legal.
All other brand or product names are trademarks or registered trademarks of their respective holders. The specifications and information herein are subject to change without notice.

Downloaded from Arrow.com.

Parameter	Description	Device	–6 Commercial/Industrial		–5 Commercial/Industrial		–4 Commercial/Industrial		–5 Automotive		Unit
			Min	Max	Min	Max	Min	Max	Min	Max	
t_{SU}	Clock to Data Setup – PIO Input Register	MachXO2-256HC-HE	–0.06	—	–0.06	—	–0.06	—	–0.20	—	ns
		MachXO2-640HC-HE	–0.06	—	–0.06	—	–0.06	—	–0.20	—	ns
		MachXO2-1200HC-HE	–0.17	—	–0.17	—	–0.17	—	—	—	ns
		MachXO2-2000HC-HE	–0.20	—	–0.20	—	–0.20	—	—	—	ns
		MachXO2-4000HC-HE	–0.23	—	–0.23	—	–0.23	—	—	—	ns
		MachXO2-7000HC-HE	–0.23	—	–0.23	—	–0.23	—	—	—	ns
t_H	Clock to Data Hold – PIO Input Register	MachXO2-256HC-HE	1.75	—	1.95	—	2.16	—	2.58	—	ns
		MachXO2-640HC-HE	1.75	—	1.95	—	2.16	—	2.58	—	ns
		MachXO2-1200HC-HE	1.88	—	2.12	—	2.36	—	—	—	ns
		MachXO2-2000HC-HE	1.89	—	2.13	—	2.37	—	—	—	ns
		MachXO2-4000HC-HE	1.94	—	2.18	—	2.43	—	—	—	ns
		MachXO2-7000HC-HE	1.98	—	2.23	—	2.49	—	—	—	ns
t_{SU_DEL}	Clock to Data Setup – PIO Input Register with Data Input Delay	MachXO2-256HC-HE	1.42	—	1.59	—	1.96	—	1.76	—	ns
		MachXO2-640HC-HE	1.41	—	1.58	—	1.96	—	1.76	—	ns
		MachXO2-1200HC-HE	1.63	—	1.79	—	2.17	—	—	—	ns
		MachXO2-2000HC-HE	1.61	—	1.76	—	2.13	—	—	—	ns
		MachXO2-4000HC-HE	1.66	—	1.81	—	2.19	—	—	—	ns
		MachXO2-7000HC-HE	1.53	—	1.67	—	2.03	—	—	—	ns
t_{H_DEL}	Clock to Data Hold – PIO Input Register with Input Data Delay	MachXO2-256HC-HE	–0.24	—	–0.24	—	–0.24	—	–0.19	—	ns
		MachXO2-640HC-HE	–0.23	—	–0.23	—	–0.23	—	–0.19	—	ns
		MachXO2-1200HC-HE	–0.24	—	–0.24	—	–0.24	—	—	—	ns
		MachXO2-2000HC-HE	–0.23	—	–0.23	—	–0.23	—	—	—	ns
		MachXO2-4000HC-HE	–0.25	—	–0.25	—	–0.25	—	—	—	ns
		MachXO2-7000HC-HE	–0.21	—	–0.21	—	–0.21	—	—	—	ns

© 2026 Lattice Semiconductor Corp. All Lattice trademarks, registered trademarks, patents, and disclaimers are as listed at www.latticesemi.com/legal.
All other brand or product names are trademarks or registered trademarks of their respective holders. The specifications and information herein are subject to change without notice.

Downloaded from Arrow.com.

Parameter	Description	Device	–6 Commercial/Industrial		–5 Commercial/Industrial		–4 Commercial/Industrial		–5 Automotive		Unit
			Min	Max	Min	Max	Min	Max	Min	Max	
f_{MAX_IO}	Clock Frequency of I/O and PFU Register	All MachXO2 devices	—	388	—	323	—	269	—	323	MHz
General I/O Pin Parameters (Using Edge Clock without PLL)											
t_{COE}	Clock to Output – PIO Output Register	MachXO2-1200HC-HE	—	7.53	—	7.76	—	8.10	—	—	ns
		MachXO2-2000HC-HE	—	7.53	—	7.76	—	8.10	—	—	ns
		MachXO2-4000HC-HE	—	7.45	—	7.68	—	8.00	—	—	ns
		MachXO2-7000HC-HE	—	7.53	—	7.76	—	8.10	—	—	ns
t_{SUE}	Clock to Data Setup – PIO Input Register	MachXO2-1200HC-HE	–0.19	—	–0.19	—	–0.19	—	—	—	ns
		MachXO2-2000HC-HE	–0.19	—	–0.19	—	–0.19	—	—	—	ns
		MachXO2-4000HC-HE	–0.16	—	–0.16	—	–0.16	—	—	—	ns
		MachXO2-7000HC-HE	–0.19	—	–0.19	—	–0.19	—	—	—	ns
t_{HE}	Clock to Data Hold – PIO Input Register	MachXO2-1200HC-HE	1.97	—	2.24	—	2.52	—	—	—	ns
		MachXO2-2000HC-HE	1.97	—	2.24	—	2.52	—	—	—	ns
		MachXO2-4000HC-HE	1.89	—	2.16	—	2.43	—	—	—	ns
		MachXO2-7000HC-HE	1.97	—	2.24	—	2.52	—	—	—	ns
t_{SU_DELE}	Clock to Data Setup – PIO Input Register with Data Input Delay	MachXO2-1200HC-HE	1.56	—	1.69	—	2.05	—	—	—	ns
		MachXO2-2000HC-HE	1.56	—	1.69	—	2.05	—	—	—	ns
		MachXO2-4000HC-HE	1.74	—	1.88	—	2.25	—	—	—	ns
		MachXO2-7000HC-HE	1.66	—	1.81	—	2.17	—	—	—	ns
t_{H_DELE}	Clock to Data Hold – PIO Input Register with Input Data Delay	MachXO2-1200HC-HE	–0.23	—	–0.23	—	–0.23	—	—	—	ns
		MachXO2-2000HC-HE	–0.23	—	–0.23	—	–0.23	—	—	—	ns
		MachXO2-4000HC-HE	–0.34	—	–0.34	—	–0.34	—	—	—	ns
		MachXO2-7000HC-HE	–0.29	—	–0.29	—	–0.29	—	—	—	ns

© 2026 Lattice Semiconductor Corp. All Lattice trademarks, registered trademarks, patents, and disclaimers are as listed at www.latticesemi.com/legal.
All other brand or product names are trademarks or registered trademarks of their respective holders. The specifications and information herein are subject to change without notice.

Downloaded from Arrow.com.

Parameter	Description	Device	–6 Commercial/Industrial		–5 Commercial/Industrial		–4 Commercial/Industrial		–5 Automotive		Unit
			Min	Max	Min	Max	Min	Max	Min	Max	
General I/O Pin Parameters (Using Primary Clock with PLL)											
t_{COPLL}	Clock to Output – PIO Output Register	MachXO2-1200HC-HE	—	5.97	—	6.00	—	6.13	—	—	ns
		MachXO2-2000HC-HE	—	5.98	—	6.01	—	6.14	—	—	ns
		MachXO2-4000HC-HE	—	5.99	—	6.02	—	6.16	—	—	ns
		MachXO2-7000HC-HE	—	6.02	—	6.06	—	6.20	—	—	ns
t_{SUPLL}	Clock to Data Setup – PIO Input Register	MachXO2-1200HC-HE	0.36	—	0.36	—	0.65	—	—	—	ns
		MachXO2-2000HC-HE	0.36	—	0.36	—	0.63	—	—	—	ns
		MachXO2-4000HC-HE	0.35	—	0.35	—	0.62	—	—	—	ns
		MachXO2-7000HC-HE	0.34	—	0.34	—	0.59	—	—	—	ns
t_{HPLL}	Clock to Data Hold – PIO Input Register	MachXO2-1200HC-HE	0.41	—	0.48	—	0.55	—	—	—	ns
		MachXO2-2000HC-HE	0.42	—	0.49	—	0.56	—	—	—	ns
		MachXO2-4000HC-HE	0.43	—	0.50	—	0.58	—	—	—	ns
		MachXO2-7000HC-HE	0.46	—	0.54	—	0.62	—	—	—	ns
t_{SU_DELPLL}	Clock to Data Setup – PIO Input Register with Data Input Delay	MachXO2-1200HC-HE	2.88	—	3.19	—	3.72	—	—	—	ns
		MachXO2-2000HC-HE	2.87	—	3.18	—	3.70	—	—	—	ns
		MachXO2-4000HC-HE	2.96	—	3.28	—	3.81	—	—	—	ns
		MachXO2-7000HC-HE	3.05	—	3.35	—	3.87	—	—	—	ns
t_{H_DELPLL}	Clock to Data Hold – PIO Input Register with Input Data Delay	MachXO2-1200HC-HE	–0.83	—	–0.83	—	–0.83	—	—	—	ns
		MachXO2-2000HC-HE	–0.83	—	–0.83	—	–0.83	—	—	—	ns
		MachXO2-4000HC-HE	–0.87	—	–0.87	—	–0.87	—	—	—	ns
		MachXO2-7000HC-HE	–0.91	—	–0.91	—	–0.91	—	—	—	ns

© 2026 Lattice Semiconductor Corp. All Lattice trademarks, registered trademarks, patents, and disclaimers are as listed at www.latticesemi.com/legal.
All other brand or product names are trademarks or registered trademarks of their respective holders. The specifications and information herein are subject to change without notice.

Downloaded from Arrow.com.

Parameter	Description	Device	–6 Commercial/Industrial		–5 Commercial/Industrial		–4 Commercial/Industrial		–5 Automotive		Unit
			Min	Max	Min	Max	Min	Max	Min	Max	
Generic DDRX1 Inputs with Clock and Data Aligned at Pin Using PCLK Pin for Clock Input – GDDRX1_RX.SCLK.Aligned[9, 11]											
t_{DVA}	Input Data Valid After CLK	All MachXO2 devices, all sides	—	0.317	—	0.344	—	0.368	—	0.344	UI
t_{DVE}	Input Data Hold After CLK		0.742	—	0.702	—	0.668	—	0.702	—	UI
f_{DATA}	DDRX1 Input Data Speed		—	300	—	250	—	208	—	250	Mbps
f_{DDRX1}	DDRX1 SCLK Frequency		—	150	—	125	—	104	—	125	MHz
Generic DDRX1 Inputs with Clock and Data Centered at Pin Using PCLK Pin for Clock Input – GDDRX1_RX.SCLK.Centered[9, 11]											
t_{SU}	Input Data Setup Before CLK	All MachXO2 devices, all sides	0.566	—	0.560	—	0.538	—	0.565	—	ns
t_{HO}	Input Data Hold After CLK		0.778	—	0.879	—	1.090	—	0.879	—	ns
f_{DATA}	DDRX1 Input Data Speed		—	300	—	250	—	208	—	250	Mbps
f_{DDRX1}	DDRX1 SCLK Frequency		—	150	—	125	—	104	—	125	MHz
Generic DDRX2 Inputs with Clock and Data Aligned at Pin Using PCLK Pin for Clock Input – GDDRX2_RX.ECLK.Aligned[9, 11]											
t_{DVA}	Input Data Valid After CLK	MachXO2-640U, MachXO2-1200/U and larger devices, bottom side only	—	0.316	—	0.342	—	0.364	—	0.342	UI
t_{DVE}	Input Data Hold After CLK		0.710	—	0.675	—	0.679	—	0.675	—	UI
f_{DATA}	DDRX2 Serial Input Data Speed		—	664	—	554	—	462	—	554	Mbps
f_{DDRX2}	DDRX2 ECLK Frequency		—	332	—	277	—	231	—	277	MHz
f_{SCLK}	SCLK Frequency		—	166	—	139	—	116	—	139	MHz

© 2026 Lattice Semiconductor Corp. All Lattice trademarks, registered trademarks, patents, and disclaimers are as listed at www.latticesemi.com/legal.
All other brand or product names are trademarks or registered trademarks of their respective holders. The specifications and information herein are subject to change without notice.

Downloaded from Arrow.com.

Parameter	Description	Device	–6 Commercial/Industrial		–5 Commercial/Industrial		–4 Commercial/Industrial		–5 Automotive		Unit
			Min	Max	Min	Max	Min	Max	Min	Max	
Generic DDRX2 Inputs with Clock and Data Centered at Pin Using PCLK Pin for Clock Input – GDDRX2_RX.ECLK.Centered[9, 11]											
t_{SU}	Input Data Setup Before CLK	MachXO2-640U, MachXO2-1200/U and larger devices, bottom side only	0.233	—	0.219	—	0.198	—	0.233	—	ns
t_{HO}	Input Data Hold After CLK		0.287	—	0.287	—	0.344	—	0.287	—	ns
f_{DATA}	DDRX2 Serial Input Data Speed		—	664	—	554	—	462	—	554	Mbps
f_{DDRX2}	DDRX2 ECLK Frequency		—	332	—	277	—	231	—	277	MHz
f_{SCLK}	SCLK Frequency		—	166	—	139	—	116	—	139	MHz
Generic DDR4 Inputs with Clock and Data Aligned at Pin Using PCLK Pin for Clock Input – GDDRX4_RX.ECLK.Aligned[9, 11]											
t_{DVA}	Input Data Valid After ECLK	MachXO2-640U, MachXO2-1200/U and larger devices, bottom side only	—	0.290	—	0.320	—	0.345	—	0.320	UI
t_{DVE}	Input Data Hold After ECLK		0.739	—	0.699	—	0.703	—	0.699	—	UI
f_{DATA}	DDRX4 Serial Input Data Speed		—	756	—	630	—	524	—	630	Mbps
f_{DDRX4}	DDRX4 ECLK Frequency		—	378	—	315	—	262	—	315	MHz
f_{SCLK}	SCLK Frequency		—	95	—	79	—	66	—	79	MHz
Generic DDR4 Inputs with Clock and Data Centered at Pin Using PCLK Pin for Clock Input – GDDRX4_RX.ECLK.Centered[9, 11]											
t_{SU}	Input Data Setup Before ECLK	MachXO2-640U, MachXO2-1200/U and larger devices, bottom side only	0.233	—	0.219	—	0.198	—	0.233	—	ns
t_{HO}	Input Data Hold After ECLK		0.287	—	0.287	—	0.344	—	0.287	—	ns
f_{DATA}	DDRX4 Serial Input Data Speed		—	756	—	630	—	524	—	630	Mbps
f_{DDRX4}	DDRX4 ECLK Frequency		—	378	—	315	—	262	—	315	MHz
f_{SCLK}	SCLK Frequency		—	95	—	79	—	66	—	79	MHz

© 2026 Lattice Semiconductor Corp. All Lattice trademarks, registered trademarks, patents, and disclaimers are as listed at www.latticesemi.com/legal.
All other brand or product names are trademarks or registered trademarks of their respective holders. The specifications and information herein are subject to change without notice.

Downloaded from Arrow.com.

Parameter	Description	Device	–6 Commercial/Industrial		–5 Commercial/Industrial		–4 Commercial/Industrial		–5 Automotive		Unit
			Min	Max	Min	Max	Min	Max	Min	Max	
7:1 LVDS Inputs (GDDR71_RX.ECLK.7:1)[9, 11]											
t_{DVA}	Input Data Valid After ECLK	MachXO2-640U, MachXO2-1200/U and larger devices, bottom side only	—	0.290	—	0.320	—	0.345	—	0.257	UI
t_{DVE}	Input Data Hold After ECLK		0.739	—	0.699	—	0.703	—	0.699	—	UI
f_{DATA}	DDR71 Serial Input Data Speed		—	756	—	630	—	524	—	630	Mbps
f_{DDR71}	DDR71 ECLK Frequency		—	378	—	315	—	262	—	315	MHz
f_{CLKIN}	7:1 Input Clock Frequency (SCLK) (minimum limited by PLL)		—	108	—	90	—	75	—	90	MHz
Generic DDR Outputs with Clock and Data Aligned at Pin Using PCLK Pin for Clock Input – GDDRX1_TX.SCLK.Aligned[9, 11]											
t_{DIA}	Output Data Invalid After CLK Output	All MachXO2 devices, all sides	—	0.520	—	0.550	—	0.580	—	0.550	ns
t_{DIB}	Output Data Invalid Before CLK Output		—	0.520	—	0.550	—	0.580	—	0.550	ns
f_{DATA}	DDRX1 Output Data Speed		—	300	—	250	—	208	—	250	Mbps
f_{DDRX1}	DDRX1 SCLK frequency		—	150	—	125	—	104	—	125	MHz
Generic DDR Outputs with Clock and Data Centered at Pin Using PCLK Pin for Clock Input – GDDRX1_TX.SCLK.Centered[9, 11]											
t_{DVB}	Output Data Valid Before CLK Output	All MachXO2 devices, all sides	1.210	—	1.510	—	1.870	—	1.510	—	ns
t_{DVA}	Output Data Valid After CLK Output		1.210	—	1.510	—	1.870	—	1.510	—	ns
f_{DATA}	DDRX1 Output Data Speed		—	300	—	250	—	208	—	250	Mbps
f_{DDRX1}	DDRX1 SCLK Frequency (minimum limited by PLL)		—	150	—	125	—	104	—	125	MHz

© 2026 Lattice Semiconductor Corp. All Lattice trademarks, registered trademarks, patents, and disclaimers are as listed at www.latticesemi.com/legal.
All other brand or product names are trademarks or registered trademarks of their respective holders. The specifications and information herein are subject to change without notice.

Downloaded from Arrow.com.

Parameter	Description	Device	–6 Commercial/Industrial		–5 Commercial/Industrial		–4 Commercial/Industrial		–5 Automotive		Unit
			Min	Max	Min	Max	Min	Max	Min	Max	
Generic DDRX2 Outputs with Clock and Data Aligned at Pin Using PCLK Pin for Clock Input – GDDRX2_TX.ECLK.Aligned[9, 11]											
t_{DIA}	Output Data Invalid After CLK Output	MachXO2-640U, MachXO2-1200/U and larger devices, top side only	—	0.200	—	0.215	—	0.230	—	0.215	ns
t_{DIB}	Output Data Invalid Before CLK Output		—	0.200	—	0.215	—	0.230	—	0.215	ns
f_{DATA}	DDRX2 Serial Output Data Speed		—	664	—	554	—	462	—	554	Mbps
f_{DDRX2}	DDRX2 ECLK frequency		—	332	—	277	—	231	—	277	MHz
f_{SCLK}	SCLK Frequency		—	166	—	139	—	116	—	139	MHz
Generic DDRX2 Outputs with Clock and Data Centered at Pin Using PCLK Pin for Clock Input – GDDRX2_TX.ECLK.Centered[9, 11]											
t_{DVB}	Output Data Valid Before CLK Output	MachXO2-640U, MachXO2-1200/U and larger devices, top side only	0.535	—	0.670	—	0.830	—	0.670	—	ns
t_{DVA}	Output Data Valid After CLK Output		0.535	—	0.670	—	0.830	—	0.658	—	ns
f_{DATA}	DDRX2 Serial Output Data Speed		—	664	—	554	—	462	—	554	Mbps
f_{DDRX2}	DDRX2 ECLK Frequency (minimum limited by PLL)		—	332	—	277	—	231	—	277	MHz
f_{SCLK}	SCLK Frequency		—	166	—	139	—	116	—	139	MHz

© 2026 Lattice Semiconductor Corp. All Lattice trademarks, registered trademarks, patents, and disclaimers are as listed at www.latticesemi.com/legal.
All other brand or product names are trademarks or registered trademarks of their respective holders. The specifications and information herein are subject to change without notice.

Downloaded from Arrow.com.

Parameter	Description	Device	–6 Commercial/Industrial		–5 Commercial/Industrial		–4 Commercial/Industrial		–5 Automotive		Unit
			Min	Max	Min	Max	Min	Max	Min	Max	
Generic DDRX4 Outputs with Clock and Data Aligned at Pin Using PCLK Pin for Clock Input – GDDRX4_TX.ECLK.Aligned[9, 11]											
t_{DIA}	Output Data Invalid After CLK Output	MachXO2-640U, MachXO2-1200/U and larger devices, top side only	—	0.200	—	0.215	—	0.230	—	0.215	ns
t_{DIB}	Output Data Invalid Before CLK Output		—	0.200	—	0.215	—	0.230	—	0.215	ns
f_{DATA}	DDRX4 Serial Output Data Speed		—	756	—	630	—	524	—	630	Mbps
f_{DDRX4}	DDRX4 ECLK Frequency		—	378	—	315	—	262	—	315	MHz
f_{SCLK}	SCLK Frequency		—	95	—	79	—	66	—	79	MHz
Generic DDRX4 Outputs with Clock and Data Centered at Pin Using PCLK Pin for Clock Input – GDDRX4_TX.ECLK.Centered[9, 11]											
t_{DVB}	Output Data Valid Before CLK Output	MachXO2-640U, MachXO2-1200/U and larger devices, top side only	0.455	—	0.570	—	0.710	—	0.570	—	ns
t_{DVA}	Output Data Valid After CLK Output		0.455	—	0.570	—	0.710	—	0.549	—	ns
f_{DATA}	DDRX4 Serial Output Data Speed		—	756	—	630	—	524	—	630	Mbps
f_{DDRX4}	DDRX4 ECLK Frequency (minimum limited by PLL)		—	378	—	315	—	262	—	315	MHz
f_{SCLK}	SCLK Frequency		—	95	—	79	—	66	—	79	MHz

© 2026 Lattice Semiconductor Corp. All Lattice trademarks, registered trademarks, patents, and disclaimers are as listed at www.latticesemi.com/legal.
All other brand or product names are trademarks or registered trademarks of their respective holders. The specifications and information herein are subject to change without notice.

Downloaded from Arrow.com.

Parameter	Description	Device	–6 Commercial/Industrial		–5 Commercial/Industrial		–4 Commercial/Industrial		–5 Automotive		Unit
			Min	Max	Min	Max	Min	Max	Min	Max	
7:1 LVDS Outputs – GDDR71_TX.ECLK.7:1[9, 11]											
t_{DIB}	Output Data Invalid Before CLK Output	MachXO2-640U, MachXO2-1200/U and larger devices, top side only	—	0.160	—	0.180	—	0.200	—	0.180	ns
t_{DIA}	Output Data Invalid After CLK Output		—	0.160	—	0.180	—	0.200	—	0.201	ns
f_{DATA}	DDR71 Serial Output Data Speed		—	756	—	630	—	524	—	630	Mbps
f_{DDR71}	DDR71 ECLK Frequency		—	378	—	315	—	262	—	315	MHz
f_{CLKOUT}	7:1 Output Clock Frequency (SCLK) (minimum limited by PLL)		—	108	—	90	—	75	—	90	MHz
LPDDR[9, 11]											
t_{DVADQ}	Input Data Valid After DQS Input	MachXO2-1200/U and larger devices, right side only[12]	—	0.369	—	0.395	—	0.421	—	—	UI
t_{DVEDQ}	Input Data Hold After DQS Input		0.529	—	0.530	—	0.527	—	—	—	UI
t_{DQVBS}	Output Data Invalid Before DQS Output		0.25	—	0.25	—	0.25	—	—	—	UI
t_{DQVAS}	Output Data Invalid After DQS Output		0.25	—	0.25	—	0.25	—	—	—	UI
f_{DATA}	MEM LPDDR Serial Data Speed		—	280	—	250	—	208	—	—	Mbps
f_{SCLK}	SCLK Frequency		—	140	—	125	—	104	—	—	MHz
f_{LPDDR}	LPDDR Data Transfer Rate		0	280	0	250	0	208	—	—	Mbps

© 2026 Lattice Semiconductor Corp. All Lattice trademarks, registered trademarks, patents, and disclaimers are as listed at www.latticesemi.com/legal.
All other brand or product names are trademarks or registered trademarks of their respective holders. The specifications and information herein are subject to change without notice.

Downloaded from Arrow.com.

Parameter	Description	Device	–6 Commercial/Industrial		–5 Commercial/Industrial		–4 Commercial/Industrial		–5 Automotive		Unit
			Min	Max	Min	Max	Min	Max	Min	Max	
DDR[9, 11]											
t_{DVADQ}	Input Data Valid After DQS Input	MachXO2-1200/U and larger devices, right side only[12]	—	0.350	—	0.387	—	0.414	—	—	UI
t_{DVEDQ}	Input Data Hold After DQS Input		0.545	—	0.538	—	0.532	—	—	—	UI
t_{DQVBS}	Output Data Invalid Before DQS Output		0.25	—	0.25	—	0.25	—	—	—	UI
t_{DQVAS}	Output Data Invalid After DQS Output		0.25	—	0.25	—	0.25	—	—	—	UI
f_{DATA}	MEM DDR Serial Data Speed		—	300	—	250	—	208	—	—	Mbps
f_{SCLK}	SCLK Frequency		—	150	—	125	—	104	—	—	MHz
f_{MEM_DDR}	MEM DDR Data Transfer Rate		N/A	300	N/A	250	N/A	208	—	—	Mbps
DDR[9, 11]											
t_{DVADQ}	Input Data Valid After DQS Input	MachXO2-1200/U and larger devices, right side only[12]	—	0.360	—	0.378	—	0.406	—	—	UI
t_{DVEDQ}	Input Data Hold After DQS Input		0.555	—	0.549	—	0.542	—	—	—	UI
t_{DQVBS}	Output Data Invalid Before DQS Output		0.25	—	0.25	—	0.25	—	—	—	UI
t_{DQVAS}	Output Data Invalid After DQS Output		0.25	—	0.25	—	0.25	—	—	—	UI
f_{DATA}	MEM DDR Serial Data Speed		—	300	—	250	—	208	—	—	Mbps
f_{SCLK}	SCLK Frequency		—	150	—	125	—	104	—	—	MHz
f_{MEM_DDR2}	MEM DDR2 Data Transfer Rate		N/A	300	N/A	250	N/A	208	—	—	Mbps

Notes:

1. Exact performance may vary with the device and design implementation. Commercial timing numbers are shown at 85 °C and 1.14 V. Other operating conditions, including industrial and automotive, can be extracted from the Diamond software.
2. General I/O timing numbers based on LVCMOS 2.5, 8 mA, 0pf load, fast slew rate.

© 2026 Lattice Semiconductor Corp. All Lattice trademarks, registered trademarks, patents, and disclaimers are as listed at www.latticesemi.com/legal.
All other brand or product names are trademarks or registered trademarks of their respective holders. The specifications and information herein are subject to change without notice.

Downloaded from Arrow.com.

3. Generic DDR timing numbers based on LVDS I/O (for input, output, and clock ports).
4. DDR timing numbers based on SSTL25. DDR2 timing numbers based on SSTL18. LPDDR timing numbers based in LVCMOS18.
5. 7:1 LVDS (GDDR71) uses the LVDS I/O standard (for input, output, and clock ports).
6. For Generic DDRX1 mode tSU = tHO = (tDVE - tDVA - 0.03 ns)/2.
7. The tSU_DEL and tH_DEL values use the SCLK_ZERHOLD default step size. Each step is 105 ps (–6), 113 ps (–5), 120 ps (–4).
8. This number is for general purpose usage. Duty cycle tolerance is +/– 10%.
9. Duty cycle is +/–5% for system usage.
10. The above timing numbers are generated using the Diamond design tool. Exact performance may vary with the device selected.
11. Advance information for MachXO2 devices in 48 QFN packages.
12. DDR memory interface not supported in QN84 (84 QFN) and SG32 (32 QFN) packages.

3.22. MachXO2 External Switching Characteristics – ZE Devices

Over Recommended Operating Conditions

Table 3.28. MachXO2 External Switching Characteristics – ZE Devices[1, 2, 3, 4, 5, 6, 7]

Parameter	Description	Device	–3		–2		–1		Units
			Min.	Max.	Min.	Max.	Min.	Max.	
Clocks									
Primary Clocks									
f_{MAX_PRI}[8]	Frequency for Primary Clock Tree	All MachXO2 devices	—	150	—	125	—	104	MHz
t_{W_PRI}	Clock Pulse Width for Primary Clock	All MachXO2 devices	1.00	—	1.20	—	1.40	—	ns
t_{SKEW_PRI}	Primary Clock Skew Within a Device	MachXO2-256ZE	—	1250	—	1272	—	1296	ps
		MachXO2-640ZE	—	1161	—	1183	—	1206	ps
		MachXO2-1200ZE	—	1213	—	1267	—	1322	ps
		MachXO2-2000ZE	—	1204	—	1250	—	1296	ps
		MachXO2-4000ZE	—	1195	—	1233	—	1269	ps
		MachXO2-7000ZE	—	1243	—	1268	—	1296	ps
Edge Clock									
f_{MAX_EDGE}[8]	Frequency for Edge Clock	MachXO2-1200 and larger devices	—	210	—	175	—	146	MHz
Pin-LUT-Pin Propagation Delay									
t_{PD}	Best case propagation delay through one LUT-4	All MachXO2 devices	—	9.35	—	9.78	—	10.21	ns
General I/O Pin Parameters (Using Primary Clock without PLL)									
t_{CO}	Clock to Output – PIO Output Register	MachXO2-256ZE	—	10.46	—	10.86	—	11.25	ns
		MachXO2-640ZE	—	10.52	—	10.92	—	11.32	ns
		MachXO2-1200ZE	—	11.24	—	11.68	—	12.12	ns
		MachXO2-2000ZE	—	11.27	—	11.71	—	12.16	ns
		MachXO2-4000ZE	—	11.28	—	11.78	—	12.28	ns
		MachXO2-7000ZE	—	11.22	—	11.76	—	12.30	ns
t_{SU}	Clock to Data Setup – PIO Input Register	MachXO2-256ZE	–0.21	—	–0.21	—	–0.21	—	ns
		MachXO2-640ZE	–0.22	—	–0.22	—	–0.22	—	ns
		MachXO2-1200ZE	–0.25	—	–0.25	—	–0.25	—	ns
		MachXO2-2000ZE	–0.27	—	–0.27	—	–0.27	—	ns
		MachXO2-4000ZE	–0.31	—	–0.31	—	–0.31	—	ns
		MachXO2-7000ZE	–0.33	—	–0.33	—	–0.33	—	ns

© 2026 Lattice Semiconductor Corp. All Lattice trademarks, registered trademarks, patents, and disclaimers are as listed at www.latticesemi.com/legal.
All other brand or product names are trademarks or registered trademarks of their respective holders. The specifications and information herein are subject to change without notice.

Downloaded from Arrow.com.

Parameter	Description	Device	–3		–2		–1		Units
			Min.	Max.	Min.	Max.	Min.	Max.	
t_H	Clock to Data Hold – PIO Input Register	MachXO2-256ZE	3.96	—	4.25	—	4.65	—	ns
		MachXO2-640ZE	4.01	—	4.31	—	4.71	—	ns
		MachXO2-1200ZE	3.95	—	4.29	—	4.73	—	ns
		MachXO2-2000ZE	3.94	—	4.29	—	4.74	—	ns
		MachXO2-4000ZE	3.96	—	4.36	—	4.87	—	ns
		MachXO2-7000ZE	3.93	—	4.37	—	4.91	—	ns
t_{SU_DEL}	Clock to Data Setup – PIO Input Register with Data Input Delay	MachXO2-256ZE	2.62	—	2.91	—	3.14	—	ns
		MachXO2-640ZE	2.56	—	2.85	—	3.08	—	ns
		MachXO2-1200ZE	2.30	—	2.57	—	2.79	—	ns
		MachXO2-2000ZE	2.25	—	2.50	—	2.70	—	ns
		MachXO2-4000ZE	2.39	—	2.60	—	2.76	—	ns
		MachXO2-7000ZE	2.17	—	2.33	—	2.43	—	ns
t_{H_DEL}	Clock to Data Hold – PIO Input Register with Input Data Delay	MachXO2-256ZE	–0.44	—	–0.44	—	–0.44	—	ns
		MachXO2-640ZE	–0.43	—	–0.43	—	–0.43	—	ns
		MachXO2-1200ZE	–0.28	—	–0.28	—	–0.28	—	ns
		MachXO2-2000ZE	–0.31	—	–0.31	—	–0.31	—	ns
		MachXO2-4000ZE	–0.34	—	–0.34	—	–0.34	—	ns
		MachXO2-7000ZE	–0.21	—	–0.21	—	–0.21	—	ns
f_{MAX_IO}	Clock Frequency of I/O and PFU Register	All MachXO2 devices	—	150	—	125	—	104	MHz
General I/O Pin Parameters (Using Edge Clock without PLL)									
t_{COE}	Clock to Output – PIO Output Register	MachXO2-1200ZE	—	11.10	—	11.51	—	11.91	ns
		MachXO2-2000ZE	—	11.10	—	11.51	—	11.91	ns
		MachXO2-4000ZE	—	10.89	—	11.28	—	11.67	ns
		MachXO2-7000ZE	—	11.10	—	11.51	—	11.91	ns
t_{SUE}	Clock to Data Setup – PIO Input Register	MachXO2-1200ZE	–0.23	—	–0.23	—	–0.23	—	ns
		MachXO2-2000ZE	–0.23	—	–0.23	—	–0.23	—	ns
		MachXO2-4000ZE	–0.15	—	–0.15	—	–0.15	—	ns
		MachXO2-7000ZE	–0.23	—	–0.23	—	–0.23	—	ns
t_{HE}	Clock to Data Hold – PIO Input Register	MachXO2-1200ZE	3.81	—	4.11	—	4.52	—	ns
		MachXO2-2000ZE	3.81	—	4.11	—	4.52	—	ns
		MachXO2-4000ZE	3.60	—	3.89	—	4.28	—	ns
		MachXO2-7000ZE	3.81	—	4.11	—	4.52	—	ns
t_{SU_DELE}	Clock to Data Setup – PIO Input Register with Data Input Delay	MachXO2-1200ZE	2.78	—	3.11	—	3.40	—	ns
		MachXO2-2000ZE	2.78	—	3.11	—	3.40	—	ns
		MachXO2-4000ZE	3.11	—	3.48	—	3.79	—	ns
		MachXO2-7000ZE	2.94	—	3.30	—	3.60	—	ns
t_{H_DELE}	Clock to Data Hold – PIO Input Register with Input Data Delay	MachXO2-1200ZE	–0.29	—	-0.29	—	–0.29	—	ns
		MachXO2-2000ZE	–0.29	—	-0.29	—	–0.29	—	ns
		MachXO2-4000ZE	–0.46	—	-0.46	—	–0.46	—	ns
		MachXO2-7000ZE	–0.37	—	-0.37	—	–0.37	—	ns

© 2026 Lattice Semiconductor Corp. All Lattice trademarks, registered trademarks, patents, and disclaimers are as listed at www.latticesemi.com/legal.
All other brand or product names are trademarks or registered trademarks of their respective holders. The specifications and information herein are subject to change without notice.

Downloaded from Arrow.com.

Parameter	Description	Device	–3		–2		–1		Units
			Min.	Max.	Min.	Max.	Min.	Max.	
General I/O Pin Parameters (Using Primary Clock with PLL)									
t_{COPLL}	Clock to Output – PIO Output Register	MachXO2-1200ZE	—	7.95	—	8.07	—	8.19	ns
		MachXO2-2000ZE	—	7.97	—	8.10	—	8.22	ns
		MachXO2-4000ZE	—	7.98	—	8.10	—	8.23	ns
		MachXO2-7000ZE	—	8.02	—	8.14	—	8.26	ns
t_{SUPLL}	Clock to Data Setup – PIO Input Register	MachXO2-1200ZE	0.85	—	0.85	—	0.89	—	ns
		MachXO2-2000ZE	0.84	—	0.84	—	0.86	—	ns
		MachXO2-4000ZE	0.84	—	0.84	—	0.85	—	ns
		MachXO2-7000ZE	0.83	—	0.83	—	0.81	—	ns
t_{HPLL}	Clock to Data Hold – PIO Input Register	MachXO2-1200ZE	0.66	—	0.68	—	0.80	—	ns
		MachXO2-2000ZE	0.68	—	0.70	—	0.83	—	ns
		MachXO2-4000ZE	0.68	—	0.71	—	0.84	—	ns
		MachXO2-7000ZE	0.73	—	0.74	—	0.87	—	ns
t_{SU_DELPLL}	Clock to Data Setup – PIO Input Register with Data Input Delay	MachXO2-1200ZE	5.14	—	5.69	—	6.20	—	ns
		MachXO2-2000ZE	5.11	—	5.67	—	6.17	—	ns
		MachXO2-4000ZE	5.27	—	5.84	—	6.35	—	ns
		MachXO2-7000ZE	5.15	—	5.71	—	6.23	—	ns
t_{H_DELPLL}	Clock to Data Hold – PIO Input Register with Input Data Delay	MachXO2-1200ZE	–1.36	—	–1.36	—	–1.36	—	ns
		MachXO2-2000ZE	–1.35	—	–1.35	—	–1.35	—	ns
		MachXO2-4000ZE	–1.43	—	–1.43	—	–1.43	—	ns
		MachXO2-7000ZE	–1.41	—	–1.41	—	–1.41	—	ns
Generic DDRX1 Inputs with Clock and Data Aligned at Pin Using PCLK Pin for Clock Input – GDDRX1_RX.SCLK.Aligned[9, 11]									
t_{DVA}	Input Data Valid After CLK	All MachXO2 devices, all sides	—	0.382	—	0.401	—	0.417	UI
t_{DVE}	Input Data Hold After CLK		0.670	—	0.684	—	0.693	—	UI
f_{DATA}	DDRX1 Input Data Speed		—	140	—	116	—	98	Mbps
f_{DDRX1}	DDRX1 SCLK Frequency		—	70	—	58	—	49	MHz
Generic DDRX1 Inputs with Clock and Data Centered at Pin Using PCLK Pin for Clock Input – GDDRX1_RX.SCLK.Centered[9, 11]									
t_{SU}	Input Data Setup Before CLK	All MachXO2 devices, all sides	1.319	—	1.412	—	1.462	—	ns
t_{HO}	Input Data Hold After CLK		0.717	—	1.010	—	1.340	—	ns
f_{DATA}	DDRX1 Input Data Speed		—	140	—	116	—	98	Mbps
f_{DDRX1}	DDRX1 SCLK Frequency		—	70	—	58	—	49	MHz
Generic DDRX2 Inputs with Clock and Data Aligned at Pin Using PCLK Pin for Clock Input – GDDRX2_RX.ECLK.Aligned[9, 11]									
t_{DVA}	Input Data Valid After CLK	MachXO2-640U, MachXO2-1200/U and larger devices, bottom side only	—	0.361	—	0.346	—	0.334	UI
t_{DVE}	Input Data Hold After CLK		0.602	—	0.625	—	0.648	—	UI
f_{DATA}	DDRX2 Serial Input Data Speed		—	280	—	234	—	194	Mbps
f_{DDRX2}	DDRX2 ECLK Frequency		—	140	—	117	—	97	MHz
f_{SCLK}	SCLK Frequency		—	70	—	59	—	49	MHz
Generic DDRX2 Inputs with Clock and Data Centered at Pin Using PCLK Pin for Clock Input – GDDRX2_RX.ECLK.Centered[9, 11]									
t_{SU}	Input Data Setup Before CLK	MachXO2-640U, MachXO2-1200/U and larger devices, bottom side only	0.472	—	0.672	—	0.865	—	ns
t_{HO}	Input Data Hold After CLK		0.363	—	0.501	—	0.743	—	ns
f_{DATA}	DDRX2 Serial Input Data Speed		—	280	—	234	—	194	Mbps
f_{DDRX2}	DDRX2 ECLK Frequency		—	140	—	117	—	97	MHz
f_{SCLK}	SCLK Frequency		—	70	—	59	—	49	MHz

© 2026 Lattice Semiconductor Corp. All Lattice trademarks, registered trademarks, patents, and disclaimers are as listed at www.latticesemi.com/legal.
All other brand or product names are trademarks or registered trademarks of their respective holders. The specifications and information herein are subject to change without notice.

Downloaded from Arrow.com.

Parameter	Description	Device	–3		–2		–1		Units
			Min.	Max.	Min.	Max.	Min.	Max.	
Generic DDR4 Inputs with Clock and Data Aligned at Pin Using PCLK Pin for Clock Input - GDDRX4_RX.ECLK.Aligned[9, 11]									
t_{DVA}	Input Data Valid After ECLK	MachXO2-640U, MachXO2-1200/U and larger devices, bottom side only	—	0.307	—	0.316	—	0.326	UI
t_{DVE}	Input Data Hold After ECLK		0.662	—	0.650	—	0.649	—	UI
f_{DATA}	DDRX4 Serial Input Data Speed		—	420	—	352	—	292	Mbps
f_{DDRX4}	DDRX4 ECLK Frequency		—	210	—	176	—	146	MHz
f_{SCLK}	SCLK Frequency		—	53	—	44	—	37	MHz
Generic DDR4 Inputs with Clock and Data Centered at Pin Using PCLK Pin for Clock Input – GDDRX4_RX.ECLK.Centered[9, 11]									
t_{SU}	Input Data Setup Before ECLK	MachXO2-640U, MachXO2-1200/U and larger devices, bottom side only	0.434	—	0.535	—	0.630	—	ns
t_{HO}	Input Data Hold After ECLK		0.385	—	0.395	—	0.463	—	ns
f_{DATA}	DDRX4 Serial Input Data Speed		—	420	—	352	—	292	Mbps
f_{DDRX4}	DDRX4 ECLK Frequency		—	210	—	176	—	146	MHz
f_{SCLK}	SCLK Frequency		—	53	—	44	—	37	MHz
7:1 LVDS Inputs – GDDR71_RX.ECLK.7.1[9, 11]									
t_{DVA}	Input Data Valid After ECLK	MachXO2-640U, MachXO2-1200/U and larger devices, bottom side only	—	0.307	—	0.316	—	0.326	UI
t_{DVE}	Input Data Hold After ECLK		0.662	—	0.650	—	0.649	—	UI
f_{DATA}	DDR71 Serial Input Data Speed		—	420	—	352	—	292	Mbps
f_{DDR71}	DDR71 ECLK Frequency		—	210	—	176	—	146	MHz
f_{CLKIN}	7:1 Input Clock Frequency (SCLK) (minimum limited by PLL)		—	60	—	50	—	42	MHz
Generic DDR Outputs with Clock and Data Aligned at Pin Using PCLK Pin for Clock Input – GDDRX1_TX.SCLK.Aligned[9, 11]									
t_{DIA}	Output Data Invalid After CLK Output	All MachXO2 devices, all sides	—	0.850	—	0.910	—	0.970	ns
t_{DIB}	Output Data Invalid Before CLK Output		—	0.850	—	0.910	—	0.970	ns
f_{DATA}	DDRX1 Output Data Speed		—	140	—	116	—	98	Mbps
f_{DDRX1}	DDRX1 SCLK frequency		—	70	—	58	—	49	MHz
Generic DDR Outputs with Clock and Data Centered at Pin Using PCLK Pin for Clock Input – GDDRX1_TX.SCLK.Centered[9, 11]									
t_{DVB}	Output Data Valid Before CLK Output	All MachXO2 devices, all sides	2.720	—	3.380	—	4.140	—	ns
t_{DVA}	Output Data Valid After CLK Output		2.720	—	3.380	—	4.140	—	ns
f_{DATA}	DDRX1 Output Data Speed		—	140	—	116	—	98	Mbps
f_{DDRX1}	DDRX1 SCLK Frequency (minimum limited by PLL)		—	70	—	58	—	49	MHz
Generic DDRX2 Outputs with Clock and Data Aligned at Pin Using PCLK Pin for Clock Input – GDDRX2_TX.ECLK.Aligned[9, 11]									
t_{DIA}	Output Data Invalid After CLK Output	MachXO2-640U, MachXO2-1200/U and larger devices, top side only	—	0.270	—	0.300	—	0.330	ns
t_{DIB}	Output Data Invalid Before CLK Output		—	0.270	—	0.300	—	0.330	ns
f_{DATA}	DDRX2 Serial Output Data Speed		—	280	—	234	—	194	Mbps
f_{DDRX2}	DDRX2 ECLK frequency		—	140	—	117	—	97	MHz
f_{SCLK}	SCLK Frequency		—	70	—	59	—	49	MHz

© 2026 Lattice Semiconductor Corp. All Lattice trademarks, registered trademarks, patents, and disclaimers are as listed at www.latticesemi.com/legal.
All other brand or product names are trademarks or registered trademarks of their respective holders. The specifications and information herein are subject to change without notice.

Downloaded from Arrow.com.

Parameter	Description	Device	–3		–2		–1		Units
			Min.	Max.	Min.	Max.	Min.	Max.	
Generic DDRX2 Outputs with Clock and Data Centered at Pin Using PCLK Pin for Clock Input – GDDRX2_TX.ECLK.Centered[9, 11]									
t_{DVB}	Output Data Valid Before CLK Output	MachXO2-640U, MachXO2-1200/U and larger devices, top side only	1.445	—	1.760	—	2.140	—	ns
t_{DVA}	Output Data Valid After CLK Output		1.445	—	1.760	—	2.140	—	ns
f_{DATA}	DDRX2 Serial Output Data Speed		—	280	—	234	—	194	Mbps
f_{DDRX2}	DDRX2 ECLK Frequency (minimum limited by PLL)		—	140	—	117	—	97	MHz
f_{SCLK}	SCLK Frequency		—	70	—	59	—	49	MHz
Generic DDRX4 Outputs with Clock and Data Aligned at Pin Using PCLK Pin for Clock Input – GDDRX4_TX.ECLK.Aligned[9, 11]									
t_{DIA}	Output Data Invalid After CLK Output	MachXO2-640U, MachXO2-1200/U and larger devices, top side only	—	0.270	—	0.300	—	0.330	ns
t_{DIB}	Output Data Invalid Before CLK Output		—	0.270	—	0.300	—	0.330	ns
f_{DATA}	DDRX4 Serial Output Data Speed		—	420	—	352	—	292	Mbps
f_{DDRX4}	DDRX4 ECLK Frequency		—	210	—	176	—	146	MHz
f_{SCLK}	SCLK Frequency		—	53	—	44	—	37	MHz
Generic DDRX4 Outputs with Clock and Data Centered at Pin Using PCLK Pin for Clock Input – GDDRX4_TX.ECLK.Centered[9, 11]									
t_{DVB}	Output Data Valid Before CLK Output	MachXO2-640U, MachXO2-1200/U and larger devices, top side only	0.873	—	1.067	—	1.319	—	ns
t_{DVA}	Output Data Valid After CLK Output		0.873	—	1.067	—	1.319	—	ns
f_{DATA}	DDRX4 Serial Output Data Speed		—	420	—	352	—	292	Mbps
f_{DDRX4}	DDRX4 ECLK Frequency (minimum limited by PLL)		—	210	—	176	—	146	MHz
f_{SCLK}	SCLK Frequency		—	53	—	44	—	37	MHz
7:1 LVDS Outputs – GDDR71_TX.ECLK.7:1[9, 11]									
t_{DIB}	Output Data Invalid Before CLK Output	MachXO2-640U, MachXO2-1200/U and larger devices, top side only	—	0.240	—	0.270	—	0.300	ns
t_{DIA}	Output Data Invalid After CLK Output		—	0.240	—	0.270	—	0.300	ns
f_{DATA}	DDR71 Serial Output Data Speed		—	420	—	352	—	292	Mbps
f_{DDR71}	DDR71 ECLK Frequency		—	210	—	176	—	146	MHz
f_{CLKOUT}	7:1 Output Clock Frequency (SCLK) (minimum limited by PLL)		—	60	—	50	—	42	MHz

© 2026 Lattice Semiconductor Corp. All Lattice trademarks, registered trademarks, patents, and disclaimers are as listed at www.latticesemi.com/legal.
All other brand or product names are trademarks or registered trademarks of their respective holders. The specifications and information herein are subject to change without notice.

Downloaded from Arrow.com.

Parameter	Description	Device	–3		–2		–1		Units
			Min.	Max.	Min.	Max.	Min.	Max.	
LPDDR[9, 11]									
t_{DVADQ}	Input Data Valid After DQS Input	MachXO2-1200/U and larger devices, right side only[12]	—	0.349	—	0.381	—	0.396	UI
t_{DVEDQ}	Input Data Hold After DQS Input		0.665	—	0.630	—	0.613	—	UI
t_{DQVBS}	Output Data Invalid Before DQS Output		0.25	—	0.25	—	0.25	—	UI
t_{DQVAS}	Output Data Invalid After DQS Output		0.25	—	0.25	—	0.25	—	UI
f_{DATA}	MEM LPDDR Serial Data Speed		—	120	—	110	—	96	Mbps
f_{SCLK}	SCLK Frequency		—	60	—	55	—	48	MHz
f_{LPDDR}	LPDDR Data Transfer Rate		0	120	0	110	0	96	Mbps
DDR[9, 11]									
t_{DVADQ}	Input Data Valid After DQS Input	MachXO2-1200/U and larger devices, right side only[12]	—	0.347	—	0.374	—	0.393	UI
t_{DVEDQ}	Input Data Hold After DQS Input		0.665	—	0.637	—	0.616	—	UI
t_{DQVBS}	Output Data Invalid Before DQS Output		0.25	—	0.25	—	0.25	—	UI
t_{DQVAS}	Output Data Invalid After DQS Output		0.25	—	0.25	—	0.25	—	UI
f_{DATA}	MEM DDR Serial Data Speed		—	140	—	116	—	98	Mbps
f_{SCLK}	SCLK Frequency		—	70	—	58	—	49	MHz
f_{MEM_DDR}	MEM DDR Data Transfer Rate		N/A	140	N/A	116	N/A	98	Mbps
DDR2[9, 11]									
t_{DVADQ}	Input Data Valid After DQS Input	MachXO2-1200/U and larger devices, right side only[12]	—	0.372	—	0.394	—	0.410	UI
t_{DVEDQ}	Input Data Hold After DQS Input		0.690	—	0.658	—	0.618	—	UI
t_{DQVBS}	Output Data Invalid Before DQS Output		0.25	—	0.25	—	0.25	—	UI
t_{DQVAS}	Output Data Invalid After DQS Output		0.25	—	0.25	—	0.25	—	UI
f_{DATA}	MEM DDR Serial Data Speed		—	140	—	116	—	98	Mbps
f_{SCLK}	SCLK Frequency		—	70	—	58	—	49	MHz
f_{MEM_DDR2}	MEM DDR2 Data Transfer Rate		N/A	140	N/A	116	N/A	98	Mbps

Notes:

1. Exact performance may vary with device and design implementation. Commercial timing numbers are shown at 85 °C and 1.14 V. Other operating conditions, including industrial and automotive, can be extracted from the Diamond software.
2. General I/O timing numbers based on LVCMOS 2.5, 8 mA, 0 pf load, fast slew rate.
3. Generic DDR timing numbers based on LVDS I/O (for input, output, and clock ports).
4. DDR timing numbers based on SSTL25. DDR2 timing numbers based on SSTL18. LPDDR timing numbers based in LVCMOS18.
5. 7:1 LVDS (GDDR71) uses the LVDS I/O standard (for input, output, and clock ports).
6. For Generic DDRX1 mode tSU = tHO = (tDVE - tDVA - 0.03 ns)/2.
7. The tSU_DEL and tH_DEL values use the SCLK_ZERHOLD default step size. Each step is 167 ps (–3), 182 ps (–2), 195 ps (–1).
8. This number is for general purpose usage. Duty cycle tolerance is +/–10%.
9. Duty cycle is +/– 5% for system usage.
10. The above timing numbers are generated using the Diamond design tool. Exact performance may vary with the device selected.
11. Advance information for MachXO2 devices in 48 QFN packages.

© 2026 Lattice Semiconductor Corp. All Lattice trademarks, registered trademarks, patents, and disclaimers are as listed at www.latticesemi.com/legal.
All other brand or product names are trademarks or registered trademarks of their respective holders. The specifications and information herein are subject to change without notice.

Downloaded from Arrow.com.

12. DDR memory interface is not supported in QN84 (84 QFN) and SG32 (32 QFN) packages.

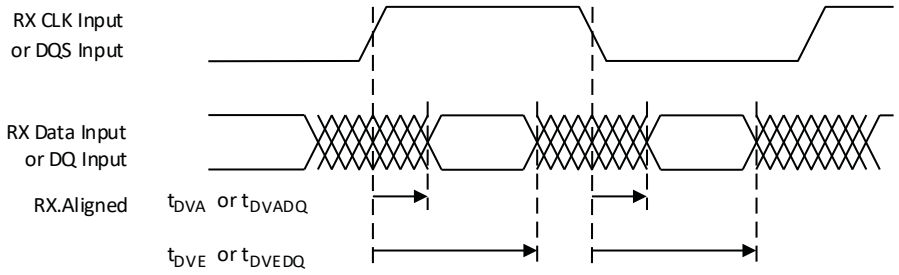

Figure 3.6. Receiver RX.CLK.Aligned and MEM DDR Input Waveforms

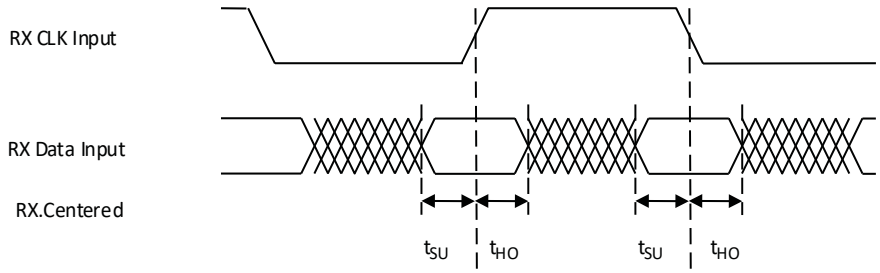

Figure 3.7. Receiver RX.CLK.Centered Waveforms

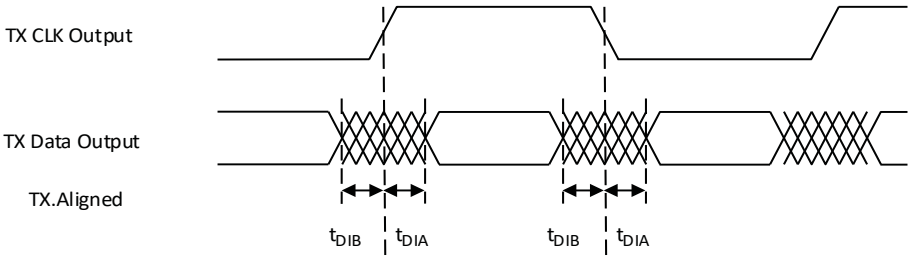

Figure 3.8. Transmitter TX.CLK.Aligned Waveforms

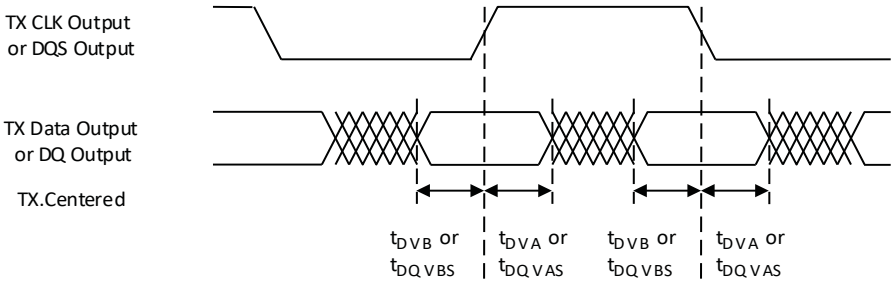

Figure 3.9. Transmitter TX.CLK.Centered and MEM DDR Output Waveforms

© 2026 Lattice Semiconductor Corp. All Lattice trademarks, registered trademarks, patents, and disclaimers are as listed at www.latticesemi.com/legal.
All other brand or product names are trademarks or registered trademarks of their respective holders. The specifications and information herein are subject to change without notice.

Downloaded from Arrow.com.

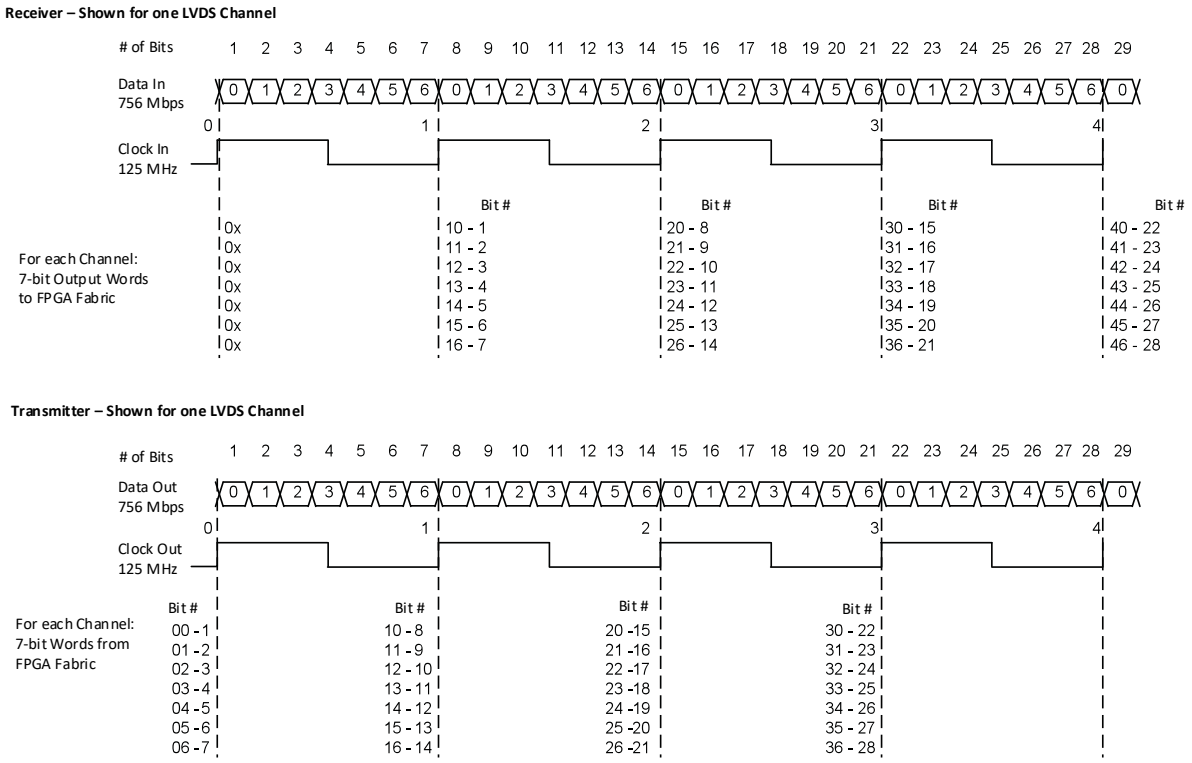

Figure 3.10. GDDR71 Video Timing Waveforms

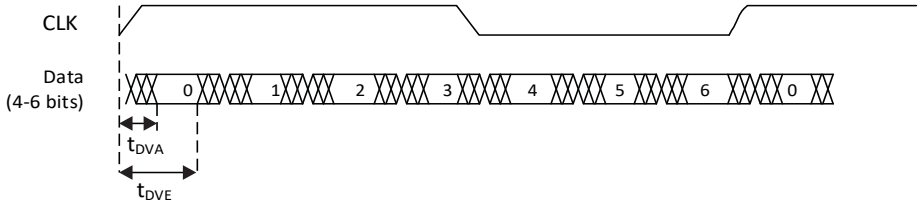

Figure 3.11. Receiver GDDR71_RX. Waveforms

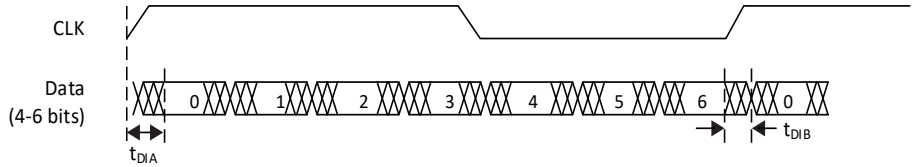

Figure 3.12. Transmitter GDDR71_TX. Waveforms

© 2026 Lattice Semiconductor Corp. All Lattice trademarks, registered trademarks, patents, and disclaimers are as listed at www.latticesemi.com/legal.
All other brand or product names are trademarks or registered trademarks of their respective holders. The specifications and information herein are subject to change without notice.

Downloaded from Arrow.com.

3.23. sysCLOCK PLL Timing

Over Recommended Operating Conditions

Table 3.29. sysCLOCK PLL Timing

Parameter	Descriptions	Conditions	–6 (Commercial/Industrial)		–5 (Automotive)		Units
			Min.	Max.	Min.	Max.	
f_{IN}	Input Clock Frequency (CLKI, CLKFB)	—	7	400	7	400	MHz
f_{OUT}	Output Clock Frequency (CLKOP, CLKOS, CLKOS2)	—	1.5625	400	1.5625	400	MHz
f_{OUT}[2]	Output Frequency (CLKOS3 cascaded from CLKOS2)	—	0.0122	400	0.0122	400	MHz
f_{VCO}	PLL VCO Frequency	—	200	800	200	800	MHz
f_{PFD}	Phase Detector Input Frequency	—	7	400	7	400	MHz
AC Characteristics							
t_{DT}	Output Clock Duty Cycle	Without duty trim selected[3]	45	55	45	55	%
t_{DT_TRIM}[7]	Edge Duty Trim Accuracy	—	–75	75	N/A	N/A	%
t_{PH}[4]	Output Phase Accuracy	—	–6	6	–6	6	%
t_{OPJIT}[1, 8]	Output Clock Period Jitter	f_{OUT} > 100 MHz	—	150	—	150	ps p-p
		f_{OUT} < 100 MHz	—	0.007	—	0.010	UIPP
	Output Clock Cycle-to-cycle Jitter	f_{OUT} > 100 MHz	—	180	—	180	ps p-p
		f_{OUT} < 100 MHz	—	0.009	—	0.015	UIPP
	Output Clock Phase Jitter	f_{PFD} > 100 MHz	—	160	—	160	ps p-p
		f_{PFD} < 100 MHz	—	0.011	—	0.011	UIPP
	Output Clock Period Jitter (Fractional-N)	f_{OUT} > 100 MHz	—	230	—	TBD	ps p-p
		f_{OUT} < 100 MHz	—	0.12	—	TBD	UIPP
	Output Clock Cycle-to-cycle Jitter (Fractional-N)	f_{OUT} > 100 MHz	—	230	—	TBD	ps p-p
		f_{OUT} < 100 MHz	—	0.12	—	TBD	UIPP
t_{SPO}	Static Phase Offset	Divider ratio = integer	–120	120	–141	141	ps
t_W	Output Clock Pulse Width	At 90% or 10%[3]	0.9	—	—	—	ns
t_{LOCK}[2, 5]	PLL Lock-in Time	—	—	15	—	17.5	ms
t_{UNLOCK}	PLL Unlock Time	—	—	50	—	50	ns
t_{IPJIT}[6]	Input Clock Period Jitter	f_{PFD} > 20 MHz	—	1,000	—	1,000	ps p-p
		f_{PFD} < 20 MHz	—	0.02	0.8	0.02	UIPP
t_{HI}	Input Clock High Time	90% to 90%	0.5	—	0.8	—	ns
t_{LO}	Input Clock Low Time	10% to 10%	0.5	—	0.5	—	ns
t_{STABLE}[5]	STANDBY High to PLL Stable	—	—	15	—	15	ms
t_{RST}	RST/RESETM Pulse Width	—	1	—	1	—	ns
t_{RSTREC}	RST Recovery Time	—	1	—	2.46	—	ns
t_{RST_DIV}	RESETC/D Pulse Width	—	10	—	10	—	ns
t_{RSTREC_DIV}	RESETC/D Recovery Time	—	1	—	2.33	—	ns
$t_{ROTATE\text{-}SETUP}$	PHASESTEP Setup Time	—	10	—	10	—	ns
t_{ROTATE_WD}	PHASESTEP Pulse Width	—	4	—	4	—	VCO Cycles

Notes:

1. Period jitter sample is taken over 10,000 samples of the primary PLL output with a clean reference clock. Cycle-to-cycle jitter is taken over 1000 cycles. Phase jitter is taken over 2000 cycles. All values per JESD65B.

© 2026 Lattice Semiconductor Corp. All Lattice trademarks, registered trademarks, patents, and disclaimers are as listed at www.latticesemi.com/legal.
All other brand or product names are trademarks or registered trademarks of their respective holders. The specifications and information herein are subject to change without notice.

Downloaded from Arrow.com.

2. Output clock is valid after tLOCK for PLL reset and dynamic delay adjustment.
3. Using LVDS output buffers.
4. CLKOS as compared to CLKOP output for one phase step at the maximum VCO frequency. See MachXO2 sysCLOCK PLL Design and Usage Guide (FPGA-TN-02157) for more details.
5. At minimum f_{PFD}. As the f_{PFD} increases, the time decreases to approximately 60% of the value listed.
6. Maximum allowed jitter on an input clock. PLL unlock may occur if the input jitter exceeds this specification. Jitter on the input clock may be transferred to the output clocks, resulting in jitter measurements outside the output specifications listed in this table.
7. Edge Duty Trim Accuracy is a percentage of the setting value. Settings available are 70 ps, 140 ps, and 280 ps in addition to the default value of none.
8. Jitter values measured with the internal oscillator operating. The jitter values increase with the loading of the PLD fabric and in the presence of SSO noise.

3.24. MachXO2 Oscillator Output Frequency

Table 3.30. MachXO2 Oscillator Output Frequency[1]

Symbol	Parameter	–6 and –5 (Commercial/Industrial)			–5 (Automotive)			Units
		Min.	Typ.	Max	Min.	Typ.	Max	
f_{MAX}	Oscillator Output Frequency (Commercial Grade Devices, 0 to 85°C)	125.685	133	140.315	—	—	—	MHz
	Oscillator Output Frequency (Industrial Grade Devices, –40 °C to 100 °C)	124.355	133	141.645	—	—	—	MHz
	Oscillator Output Frequency (Automotive Grade Devices, –40 °C to 125 °C)	—	—	—	122.360	133	143.640	MHz
t_{DT}	Output Clock Duty Cycle	43	50	57	43	50	57	%
t_{OPJIT}	Output Clock Period Jitter	0.01	0.012	0.02	—	—	0.02	UIPP
$t_{STABLEOSC}$	STDBY Low to Oscillator Stable	0.01	0.05	0.1	—	—	0.1	µs

Note:

1. Output Clock Period Jitter specified at 133 MHz. The values for lower frequencies are smaller UIPP. The typical value for 133 MHz is 95 ps and for 2.08 MHz the typical value is 1.54 ns.

3.25. MachXO2 Standby Mode Timing – HC/HE Devices

Table 3.31. MachXO2 Standby Mode Timing – HC/HE Devices

Symbol	Parameter	Device	Min.	Typ.	Max	Units
t_{PWRDN}	USERSTDBY High to Stop	All	—	—	9	ns
t_{PWRUP}	USERSTDBY Low to Power-Up	MachXO2-256	—	—	—	µs
		MachXO2-640	—	—	—	µs
		MachXO2-640U	—	—	—	µs
		MachXO2-1200	20	—	50	µs
		MachXO2-1200U	—	—	—	µs
		MachXO2-2000	—	—	—	µs
		MachXO2-2000U	—	—	—	µs
		MachXO2-4000	—	—	—	µs
		MachXO2-7000	—	—	—	µs
t_{WSTDBY}	USERSTDBY Pulse Width	All	18	—	—	ns

© 2026 Lattice Semiconductor Corp. All Lattice trademarks, registered trademarks, patents, and disclaimers are as listed at www.latticesemi.com/legal.
All other brand or product names are trademarks or registered trademarks of their respective holders. The specifications and information herein are subject to change without notice.

Downloaded from Arrow.com.

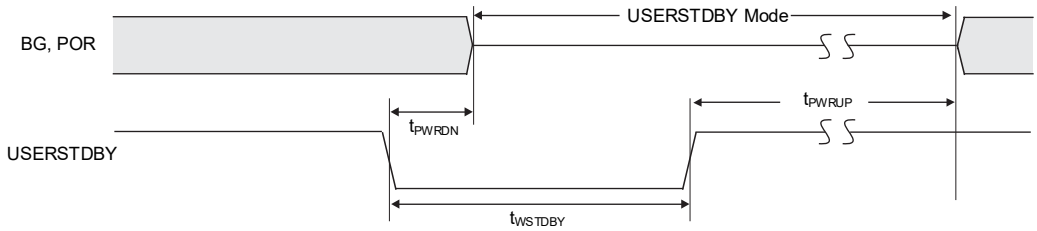

Figure 3.13. Standby Mode Timing Waveforms

3.26. MachXO2 Standby Mode Timing – ZE Devices

Table 3.32. MachXO2 Standby Mode Timing – ZE Devices

Symbol	Parameter	Device	Min.	Typ.	Max	Units
t_{PWRDN}	USERSTDBY High to Stop	All	—	—	13	ns
t_{PWRUP}	USERSTDBY Low to Power-Up	MachXO2-256	—	—	—	µs
		MachXO2-640	—	—	—	µs
		MachXO2-1200	20	—	50	µs
		MachXO2-2000	—	—	—	µs
		MachXO2-4000	—	—	—	µs
		MachXO2-7000	—	—	—	µs
t_{WSTDBY}	USERSTDBY Pulse Width	All	19	—	—	ns
$t_{BNDGAPSTBL}$	USERSTDBY High to Bandgap Stable	All	—	—	15	ns

3.27. Flash Download Time

Table 3.33. Flash Download Time

Symbol	Parameter	Device	Typ.	Units
$t_{REFRESH}$	POR to Device I/O Active	MachXO2-256	0.6	ms
		MachXO2-640	1.0	ms
		MachXO2-640U	1.9	ms
		MachXO2-1200	1.9	ms
		MachXO2-1200U	1.4	ms
		MachXO2-2000	1.4	ms
		MachXO2-2000U	2.4	ms
		MachXO2-4000	2.4	ms
		MachXO2-7000	3.8	ms

Notes:

- Assumes sysMEM EBR initialized to an all zero pattern if they are used.
- The Flash download time is measured starting from the maximum voltage of POR trip point.
- The worst case can be up to 1.75 times the Typ value.

© 2026 Lattice Semiconductor Corp. All Lattice trademarks, registered trademarks, patents, and disclaimers are as listed at www.latticesemi.com/legal.
All other brand or product names are trademarks or registered trademarks of their respective holders. The specifications and information herein are subject to change without notice.

Downloaded from Arrow.com.

3.28. JTAG Port Timing Specifications

Table 3.34. JTAG Port Timing Specifications

Symbol	Parameter	Commercial/Industrial		Automotive		Units
		Min.	Max.	Min.	Max.	
f_{MAX}	TCK clock frequency	—	25	—	25	MHz
t_{BTCPH}	TCK [BSCAN] clock pulse width high	20	—	20	—	ns
t_{BTCPL}	TCK [BSCAN] clock pulse width low	20	—	20	—	ns
t_{BTS}	TCK [BSCAN] setup time	10	—	10	—	ns
t_{BTH}	TCK [BSCAN] hold time	8	—	10	—	ns
t_{BTCO}	TAP controller falling edge of clock to valid output	—	10	—	10	ns
$t_{BTCODIS}$	TAP controller falling edge of clock to valid disable	—	10	—	12	ns
t_{BTCOEN}	TAP controller falling edge of clock to valid enable	—	10	—	12	ns
t_{BTCRS}	BSCAN test capture register setup time	8	—	8	—	ns
t_{BTCRH}	BSCAN test capture register hold time	20	—	20	—	ns
t_{BUTCO}	BSCAN test update register, falling edge of clock to valid output	—	25	—	25	ns
$t_{BTUODIS}$	BSCAN test update register, falling edge of clock to valid disable	—	25	—	27	ns
$t_{BTUPOEN}$	BSCAN test update register, falling edge of clock to valid enable	—	25	—	25	ns

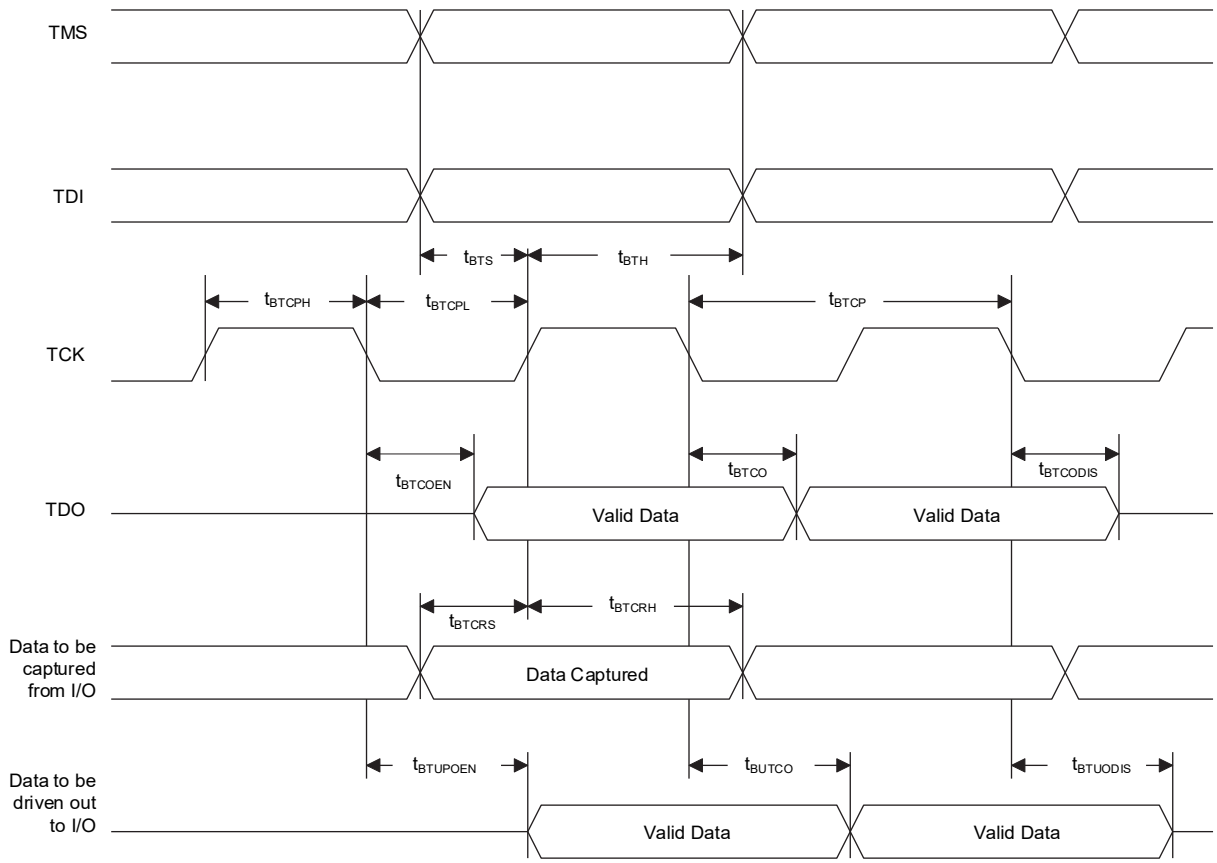

Figure 3.14. JTAG Port Timing Waveforms

© 2026 Lattice Semiconductor Corp. All Lattice trademarks, registered trademarks, patents, and disclaimers are as listed at www.latticesemi.com/legal.
All other brand or product names are trademarks or registered trademarks of their respective holders. The specifications and information herein are subject to change without notice.

Downloaded from Arrow.com.

3.29. sysCONFIG Port Timing Specifications

Table 3.35. sysCONFIG Port Timing Specifications

Symbol	Parameter		Commercial/Industrial		Automotive		Units
			Min.	Max.	Min.	Max.	
All Configuration Modes							
t_{PRGM}	PROGRAMN low pulse accept		55	—	55	—	ns
t_{PRGMJ}	PROGRAMN low pulse rejection		—	25	—	25	ns
t_{INITL}	INITN low time	MachXO2-256	—	30	—	93	µs
		MachXO2-640	—	35	—	93	µs
		MachXO2-640U/ MachXO2-1200	—	55	—	—	µs
		MachXO2-1200U/ MachXO2-2000	—	70	—	—	µs
		MachXO2-2000U/ MachXO2-4000	—	105	—	—	µs
		MachXO2-7000	—	130	—	—	µs
$t_{DPPINIT}$	PROGRAMN low to INITN low		—	150	—	150	ns
$t_{DPPDONE}$	PROGRAMN low to DONE low		—	150	—	150	ns
t_{IODISS}	PROGRAMN low to I/O disable		—	120	—	120	ns
Slave SPI							
f_{MAX}	CCLK clock frequency		—	66	—	66	MHz
t_{CCLKH}	CCLK clock pulse width high		7.5	—	7.5	—	ns
t_{CCLKL}	CCLK clock pulse width low		7.5	—	7.5	—	ns
t_{STSU}	CCLK setup time		2	—	2	—	ns
t_{STH}	CCLK hold time		0	—	0	—	ns
t_{STCO}	CCLK falling edge to valid output		—	10	—	14	ns
t_{STOZ}	CCLK falling edge to valid disable		—	10	—	12	ns
t_{STOV}	CCLK falling edge to valid enable		—	10	—	14	ns
t_{SCS}	Chip select high time		25	—	25	—	ns
t_{SCSS}	Chip select setup time		3	—	3	—	ns
t_{SCSH}	Chip select hold time		3	—	3	—	ns
Master SPI							
f_{MAX}	MCLK clock frequency		—	133	—	66	MHz
t_{MCLKH}	MCLK clock pulse width high		3.75	—	7.5	—	ns
t_{MCLKL}	MCLK clock pulse width low		3.75	—	7.5	—	ns
t_{STSU}	MCLK setup time		5	—	6	—	ns
t_{STH}	MCLK hold time		1	—	3	—	ns
t_{CSSPI}	INITN high to chip select low		100	200	100	200	ns
t_{MCLK}	INITN high to first MCLK edge		0.75	1	0.75	1	µs

© 2026 Lattice Semiconductor Corp. All Lattice trademarks, registered trademarks, patents, and disclaimers are as listed at www.latticesemi.com/legal.
All other brand or product names are trademarks or registered trademarks of their respective holders. The specifications and information herein are subject to change without notice.

Downloaded from Arrow.com.

3.30. I2C Port Timing Specifications

Table 3.36. I2C Port Timing Specifications

Symbol	Parameter	Min.	Max.	Units
f_{MAX}	Maximum SCL clock frequency	—	400	kHz

Notes:

1. MachXO2 supports the following modes:
   - Standard-mode (Sm), with a bit rate up to 100 kbit/s (user and configuration mode)
   - Fast-mode (Fm), with a bit rate up to 400 kbit/s (user and configuration mode)
2. Refer to the I2C specification for timing requirements.

3.31. SPI Port Timing Specifications

Table 3.37. SPI Port Timing Specifications[1]

Symbol	Parameter	Min.	Max.	Units
f_{MAX}	Maximum SCK clock frequency	—	45	MHz

Note:

1. Applies to user mode only. For configuration mode timing specifications, refer to Table 3.35 in this data sheet.

3.32. Switching Test Conditions

Figure 3.15 shows the output test load used for AC testing. The specific values for resistance, capacitance, voltage, and other test conditions are shown in Table 3.38.

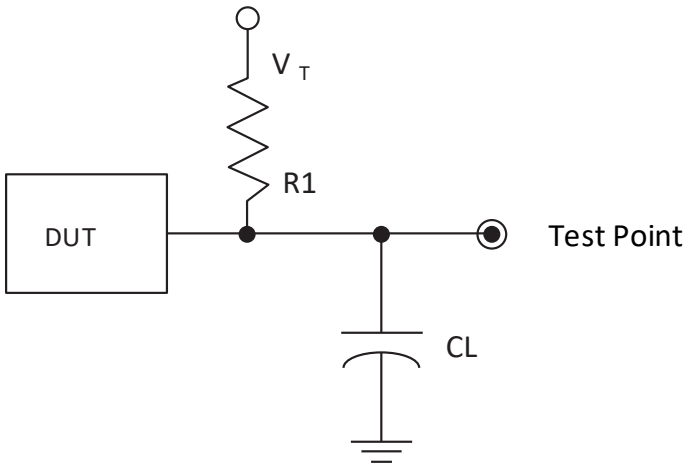

Figure 3.15. Output Test Load, LVTTL and LVCMOS Standards

© 2026 Lattice Semiconductor Corp. All Lattice trademarks, registered trademarks, patents, and disclaimers are as listed at www.latticesemi.com/legal.
All other brand or product names are trademarks or registered trademarks of their respective holders. The specifications and information herein are subject to change without notice.

Downloaded from Arrow.com.

Table 3.38. Test Fixture Required Components, Non-Terminated Interfaces[1]

Test Condition	R1	CL	Timing Ref.	VT
LVTTL and LVCMOS settings (L -> H, H -> L)	∞	0pF	LVTTL, LVCMOS 3.3 = 1.5 V	—
			LVCMOS 2.5 = $V_{CCIO}/2$	—
			LVCMOS 1.8 = $V_{CCIO}/2$	—
			LVCMOS 1.5 = $V_{CCIO}/2$	—
			LVCMOS 1.2 = $V_{CCIO}/2$	—
LVTTL and LVCMOS 3.3 (Z -> H)	188	0pF	1.5 V	V_{OL}
LVTTL and LVCMOS 3.3 (Z -> L)			1.5 V	V_{OH}
Other LVCMOS (Z -> H)			$V_{CCIO}/2$	V_{OL}
Other LVCMOS (Z -> L)			$V_{CCIO}/2$	V_{OH}
LVTTL + LVCMOS (H -> Z)			V_{OH} – 0.15 V	V_{OL}
LVTTL + LVCMOS (L -> Z)			V_{OL} – 0.15 V	V_{OH}

Note:

1. Output test conditions for all other interfaces are determined by the respective standards.

© 2026 Lattice Semiconductor Corp. All Lattice trademarks, registered trademarks, patents, and disclaimers are as listed at www.latticesemi.com/legal.
All other brand or product names are trademarks or registered trademarks of their respective holders. The specifications and information herein are subject to change without notice.

Downloaded from Arrow.com.

4. Pinout Information

4.1. Signal Descriptions

Table 4.1. Signal Descriptions

Signal Name	I/O	Descriptions
General Purpose		
P[Edge] [Row/Column Number]_[A/B/C/D]	I/O	[Edge] indicates the edge of the device on which the pad is located. Valid edge designations are L (Left), B (Bottom), R (Right), T (Top). [Row/Column Number] indicates the PFU row or the column of the device on which the PIO Group exists. When Edge is T (Top) or B(Bottom), only the Row Number needs to be specified. When Edge is L (Left) or R (Right), only the Column Number needs to be specified. [A/B/C/D] indicates the PIO within the group to which the pad is connected. Some of these user-programmable pins are shared with special function pins. When not used as special function pins, these pins can be programmed as I/O for user logic. During configuration of the user-programmable I/O, the user has an option to tri-state the I/O and enable an internal pull-up, pull-down or buskeeper resistor. This option also applies to unused pins (or those not bonded to a package pin). The default during configuration is for user-programmable I/O to be tri-stated with an internal pull-down resistor enabled. When the device is erased, I/O is tri-stated with an internal pull-down resistor enabled. Some pins, such as PROGRAMN and JTAG pins, default to tri-stated I/O with pull-up resistors enabled when the device is erased.
NC	—	No connect.
GND	—	GND – Ground. Dedicated pins. It is recommended that all GNDs are tied together. For QFN 48 package, the exposed die pad is the device ground.
VCC	—	VCC – The power supply pins for core logic. Dedicated pins. It is recommended that all VCCs are tied to the same supply.
VCCIOx	—	VCCIO – The power supply pins for I/O Bank x. Dedicated pins. It is recommended that all VCCIOs located in the same bank are tied to the same supply.
PLL and Clock Functions (Used as user-programmable I/O pins when not used for PLL or clock pins)		
[LOC]_GPLL[T, C]_IN	—	Reference Clock (PLL) input pads: [LOC] indicates location. Valid designations are L (Left PLL) and R (Right PLL). T = true and C = complement.
[LOC]_GPLL[T, C]_FB	—	Optional Feedback (PLL) input pads: [LOC] indicates location. Valid designations are L (Left PLL) and R (Right PLL). T = true and C = complement.
PCLK [n]_[2:0]	—	Primary Clock pads. One to three clock pads per side.
Test and Programming (Dual function pins used for test access port and during sysCONFIG™)		
TMS	I	Test Mode Select input pin, used to control the 1149.1 state machine.
TCK	I	Test Clock input pin, used to clock the 1149.1 state machine.
TDI	I	Test Data input pin, used to load data into the device using an 1149.1 state machine.
TDO	O	Output pin – Test Data output pin used to shift data out of the device using 1149.1.
JTAGENB	I	Optionally controls behavior of TDI, TDO, TMS, TCK. If the device is configured to use the JTAG pins (TDI, TDO, TMS, TCK) as general purpose I/O, then: If JTAGENB is low: TDI, TDO, TMS and TCK can function a general purpose I/O. If JTAGENB is high: TDI, TDO, TMS and TCK function as JTAG pins. For more details, refer to MachXO2 Programming and Configuration Usage Guide (FPGA-TN-02155).
Configuration (Dual function pins used during sysCONFIG)		
PROGRAMN	I	Initiates configuration sequence when asserted low. During configuration, or when reserved as PROGRAMN in user mode, this pin always has an active pull-up.
INITN	I/O	Open Drain pin. Indicates the FPGA is ready to be configured. During configuration, or when reserved as INITn in user mode, this pin has an active pull-up.

© 2026 Lattice Semiconductor Corp. All Lattice trademarks, registered trademarks, patents, and disclaimers are as listed at www.latticesemi.com/legal.
All other brand or product names are trademarks or registered trademarks of their respective holders. The specifications and information herein are subject to change without notice.

Downloaded from Arrow.com.

Signal Name	I/O	Descriptions
DONE	I/O	Open Drain pin. Indicates that the configuration sequence is complete, and the start-up sequence is in progress. During configuration, or when reserved as DONE in user mode, this pin has an active pull-up.
MCLK/CCLK	I/O	Input Configuration Clock for configuring an FPGA in Slave SPI mode. Output Configuration Clock for configuring an FPGA in SPI and SPIm configuration modes.
SN	I	Slave SPI active low chip select input.
CSSPIN	I/O	Master SPI active low chip select output.
SI/SPISI	I/O	Slave SPI serial data input and master SPI serial data output.
SO/SPISO	I/O	Slave SPI serial data output and master SPI serial data input.
SCL	I/O	Slave I2C clock input and master I2C clock output.
SDA	I/O	Slave I2C data input and master I2C data output.

© 2026 Lattice Semiconductor Corp. All Lattice trademarks, registered trademarks, patents, and disclaimers are as listed at www.latticesemi.com/legal.
All other brand or product names are trademarks or registered trademarks of their respective holders. The specifications and information herein are subject to change without notice.

Downloaded from Arrow.com.

4.2. Pinout Information Summary

Table 4.2. MachXO2-256/MachXO2-640/MachXO2-640U Pin Summary

	MachXO2-256					MachXO2-640			MachXO2-640U
	32 QFN[1]	48 QFN	64 ucBGA	100 TQFP	132 csBGA	48 QFN	100 TQFP	132 csBGA	144 TQFP
General Purpose I/O per Bank									
Bank 0	8	10	9	13	13	10	18	19	27
Bank 1	2	10	12	14	14	10	20	20	26
Bank 2	9	10	11	14	14	10	20	20	28
Bank 3	2	10	12	14	14	10	20	20	26
Bank 4	0	0	0	0	0	0	0	0	0
Bank 5	0	0	0	0	0	0	0	0	0
Total General Purpose Single Ended I/O	21	40	44	55	55	40	78	79	107
Differential I/O per Bank									
Bank 0	4	5	5	7	7	5	9	10	14
Bank 1	1	5	6	7	7	5	10	10	13
Bank 2	4	5	5	7	7	5	10	10	14
Bank 3	1	5	6	7	7	5	10	10	13
Bank 4	0	0	0	0	0	0	0	0	0
Bank 5	0	0	0	0	0	0	0	0	0
Total General Purpose Differential I/O	10	20	22	28	28	20	39	40	54
Dual Function I/O	22	25	27	29	29	25	29	29	33
High-speed Differential I/O									
Bank 0	0	0	0	0	0	0	0	0	7
Gearboxes									
Number of 7:1 or 8:1 Output Gearbox Available (Bank 0)	0	0	0	0	0	0	0	0	7
Number of 7:1 or 8:1 Input Gearbox Available (Bank 2)	0	0	0	0	0	0	0	0	7
DQS Groups									
Bank 1	0	0	0	0	0	0	0	0	2
VCCIO Pins									
Bank 0	2	2	2	2	2	2	2	2	3
Bank 1	1	1	2	2	2	1	2	2	3
Bank 2	2	2	2	2	2	2	2	2	3
Bank 3	1	1	2	2	2	1	2	2	3
Bank 4	0	0	0	0	0	0	0	0	0
Bank 5	0	0	0	0	0	0	0	0	0
VCC	2	2	2	2	2	2	2	2	4
GND[2]	2	1	8	8	8	1	8	10	12
NC	0	0	1	26	58	0	3	32	8
Reserved for Configuration	1	1	1	1	1	1	1	1	1
Total Count of Bonded Pins	32	49	64	100	132	49	100	132	144

Notes:

1. Lattice recommends soldering the central thermal pad onto the top PCB ground for improved thermal resistance.
2. For 48 QFN package, exposed die pad is the device ground.

© 2026 Lattice Semiconductor Corp. All Lattice trademarks, registered trademarks, patents, and disclaimers are as listed at www.latticesemi.com/legal.
All other brand or product names are trademarks or registered trademarks of their respective holders. The specifications and information herein are subject to change without notice.

Downloaded from Arrow.com.

Table 4.3. MachXO2-1200/MachXO2-1200U Pin Summary

	MachXO2-1200						MachXO2-1200U
	100 TQFP	132 csBGA	144 TQFP	25 WLCSP	32 QFN[1]	36 WLCSP	256 ftBGA
General Purpose I/O per Bank							
Bank 0	18	25	27	11	9	15	50
Bank 1	21	26	26	0	2	0	52
Bank 2	20	28	28	7	9	9	52
Bank 3	20	25	26	0	2	4	16
Bank 4	0	0	0	0	0	0	16
Bank 5	0	0	0	0	0	0	20
Total General Purpose Single Ended I/O	79	104	107	18	22	28	206
Differential I/O per Bank							
Bank 0	9	13	14	5	4	7	25
Bank 1	10	13	13	0	1	0	26
Bank 2	10	14	14	2	4	4	26
Bank 3	10	12	13	0	1	2	8
Bank 4	0	0	0	0	0	0	8
Bank 5	0	0	0	0	0	0	10
Total General Purpose Differential I/O	39	52	54	7	10	14	103
Dual Function I/O	31	33	33	18	22	25	33
High-speed Differential I/O							
Bank 0	4	7	7	0	0	3	14
Gearboxes							
Number of 7:1 or 8:1 Output Gearbox Available (Bank 0)	4	7	7	0	0	3	14
Number of 7:1 or 8:1 Input Gearbox Available (Bank 2)	5	7	7	0	2	2	14
DQS Groups							
Bank 1	1	2	2	0	0	0	2
VCCIO Pins							
Bank 0	2	3	3	1	2	1	4
Bank 1	2	3	3	0	1	0	4
Bank 2	2	3	3	1	2	1	4
Bank 3	3	3	3	0	1	1	1
Bank 4	0	0	0	0	0	0	2
Bank 5	0	0	0	0	0	0	1
VCC	2	4	4	2	2	2	8
GND	8	10	12	2	2	2	24
NC	1	1	8	0	0	0	1
Reserved for Configuration	1	1	1	1	1	1	1
Total Count of Bonded Pins	100	132	144	25	32	36	256

Note:

1. Lattice recommends soldering the central thermal pad onto the top PCB ground for improved thermal resistance.

© 2026 Lattice Semiconductor Corp. All Lattice trademarks, registered trademarks, patents, and disclaimers are as listed at www.latticesemi.com/legal.
All other brand or product names are trademarks or registered trademarks of their respective holders. The specifications and information herein are subject to change without notice.

Downloaded from Arrow.com.

Table 4.4. MachXO2-2000/MachXO2-2000U Pin Summary

	MachXO2-2000						MachXO2-2000U
	49 WLCSP	100 TQFP	132 csBGA	144 TQFP	256 caBGA	256 ftBGA	484 ftBGA
General Purpose I/O per Bank							
Bank 0	19	18	25	27	50	50	70
Bank 1	0	21	26	28	52	52	68
Bank 2	13	20	28	28	52	52	72
Bank 3	0	6	7	8	16	16	24
Bank 4	0	6	8	10	16	16	16
Bank 5	6	8	10	10	20	20	28
Total General Purpose Single-Ended I/O	38	79	104	111	206	206	278
Differential I/O per Bank							
Bank 0	7	9	13	14	25	25	35
Bank 1	0	10	13	14	26	26	34
Bank 2	6	10	14	14	26	26	36
Bank 3	0	3	3	4	8	8	12
Bank 4	0	3	4	5	8	8	8
Bank 5	3	4	5	5	10	10	14
Total General Purpose Differential I/O	16	39	52	56	103	103	139
Dual Function I/O	24	31	33	33	33	33	37
High-speed Differential I/O							
Bank 0	5	4	8	9	14	14	18
Gearboxes							
Number of 7:1 or 8:1 Output Gearbox Available (Bank 0)	5	4	8	9	14	14	18
Number of 7:1 or 8:1 Input Gearbox Available (Bank 2)	6	10	14	14	14	14	18
DQS Groups							
Bank 1	0	1	2	2	2	2	2
VCCIO Pins							
Bank 0	2	2	3	3	4	4	10
Bank 1	0	2	3	3	4	4	10
Bank 2	1	2	3	3	4	4	10
Bank 3	0	1	1	1	1	1	3
Bank 4	0	1	1	1	2	2	4
Bank 5	1	1	1	1	1	1	3
VCC	2	2	4	4	8	8	12
GND	4	8	10	12	24	24	48
NC	0	1	1	4	1	1	105
Reserved for Configuration	1	1	1	1	v	1	1
Total Count of Bonded Pins	39	100	132	144	256	256	484

© 2026 Lattice Semiconductor Corp. All Lattice trademarks, registered trademarks, patents, and disclaimers are as listed at www.latticesemi.com/legal.
All other brand or product names are trademarks or registered trademarks of their respective holders. The specifications and information herein are subject to change without notice.

Downloaded from Arrow.com.

Table 4.5. MachXO2-4000 Pin Summary

	MachXO2-4000								
	81 WLCSP	**84 QFN**	**132 csBGA**	**144 TQFP**	**184 csBGA**	**256 caBGA**	**256 ftBGA**	**332 caBGA**	**484 fpBGA**
General Purpose I/O per Bank									
Bank 0	30	26	25	28	37	50	50	68	70
Bank 1	0	10	26	29	37	52	52	68	68
Bank 2	20	22	28	29	39	52	52	70	72
Bank 3	7	0	7	9	10	16	16	24	24
Bank 4	0	9	8	10	12	16	16	16	16
Bank 5	7	0	10	10	15	20	20	28	28
Total General Purpose Single Ended I/O	64	67	104	115	150	206	206	274	278
Differential I/O per Bank									
Bank 0	15	12	13	14	18	25	25	34	35
Bank 1	0	4	13	14	18	26	26	34	34
Bank 2	10	11	14	14	19	26	26	35	36
Bank 3	3	0	3	4	4	8	8	12	12
Bank 4	0	4	4	5	6	8	8	8	8
Bank 5	3	0	5	5	7	10	10	14	14
Total General Purpose Differential I/O	31	31	52	56	72	103	103	137	139
Dual Function I/O	25	28	37	37	37	37	37	37	37
High-speed Differential I/O									
Bank 0	10	8	8	9	8	18	18	18	18
Gearboxes									
Number of 7:1 or 8:1 Output Gearbox Available (Bank 0)	10	8	8	9	9	18	18	18	18
Number of 7:1 or 8:1 Input Gearbox Available (Bank 2)	10	11	14	14	12	18	18	18	18
DQS Groups									
Bank 1	0	1	2	2	2	2	2	2	2
VCCIO Pins									
Bank 0	3	3	3	3	3	4	4	4	10
Bank 1	0	1	3	3	3	4	4	4	10
Bank 2	2	2	3	3	3	4	4	4	10
Bank 3	1	0	1	1	1	1	1	2	3
Bank 4	0	1	1	1	1	2	2	1	4
Bank 5	1	0	1	1	1	1	1	2	3
VCC	4	4	4	4	4	8	8	8	12
GND	6	4	10	12	16	24	24	27	48
NC	0	1	1	1	1	1	1	5	105
Reserved for configuration	1	1	1	1	1	1	1	1	1
Total Count of Bonded Pins	81	84	132	144	184	256	256	332	484

© 2026 Lattice Semiconductor Corp. All Lattice trademarks, registered trademarks, patents, and disclaimers are as listed at www.latticesemi.com/legal.
All other brand or product names are trademarks or registered trademarks of their respective holders. The specifications and information herein are subject to change without notice.

Downloaded from Arrow.com.

Table 4.6. MachXO2-7000 Pin Summary

	MachXO2-7000					
	144 TQFP	**256 caBGA**	**256 ftBGA**	**332 caBGA**	**400 caBGA**	**484 fpBGA**
General Purpose I/O per Bank						
Bank 0	28	50	50	68	83	82
Bank 1	29	52	52	70	84	84
Bank 2	29	52	52	70	84	84
Bank 3	9	16	16	24	28	28
Bank 4	10	16	16	16	24	24
Bank 5	10	20	20	30	32	32
Total General Purpose Single Ended I/O	115	206	206	278	335	334
Differential I/O per Bank						
Bank 0	14	25	25	34	42	41
Bank 1	14	26	26	35	42	42
Bank 2	14	26	26	35	42	42
Bank 3	4	8	8	12	14	14
Bank 4	5	8	8	8	12	12
Bank 5	5	10	10	15	16	16
Total General Purpose Differential I/O	56	103	103	139	168	167
Dual Function I/O	37	37	37	37	37	37
High-speed Differential I/O						
Bank 0	9	20	20	21	21	21
Gearboxes						
Number of 7:1 or 8:1 Output Gearbox Available (Bank 0)	9	20	20	21	21	21
Number of 7:1 or 8:1 Input Gearbox Available (Bank 2)	14	20	20	21	21	21
DQS Groups						
Bank 1	2	2	2	2	2	2
VCCIO Pins						
Bank 0	3	4	4	4	5	10
Bank 1	3	4	4	4	5	10
Bank 2	3	4	4	4	5	10
Bank 3	1	1	1	2	2	3
Bank 4	1	2	2	1	2	4
Bank 5	1	1	1	2	2	3
VCC	4	8	8	8	10	12
GND	12	24	24	27	33	48
NC	1	1	1	1	0	49
Reserved for Configuration	1	1	1	1	1	1
Total Count of Bonded Pins	144	256	256	332	400	484

© 2026 Lattice Semiconductor Corp. All Lattice trademarks, registered trademarks, patents, and disclaimers are as listed at www.latticesemi.com/legal.
All other brand or product names are trademarks or registered trademarks of their respective holders. The specifications and information herein are subject to change without notice.

Downloaded from Arrow.com.

4.3. For Further Information

For further information regarding logic signal connections for various packages, refer to the MachXO2 Device Pinout Files.

4.4. Thermal Management

Thermal management is recommended as part of any sound FPGA design methodology. To assess the thermal characteristics of a system, Lattice specifies a maximum allowable junction temperature in all device data sheets. Users must complete a thermal analysis of their specific design to ensure that the device and package do not exceed the junction temperature limits. Refer to the Thermal Management document to find the device/package specific thermal values.

4.4.1. For Further Information

For further information regarding Thermal Management, refer to the following:

- Thermal Management (FPGA-TN-02044)
- Power Estimation and Management for MachXO2 Devices (TN1198)
- The Power Calculator tool is included within the Lattice design tools

© 2026 Lattice Semiconductor Corp. All Lattice trademarks, registered trademarks, patents, and disclaimers are as listed at www.latticesemi.com/legal.
All other brand or product names are trademarks or registered trademarks of their respective holders. The specifications and information herein are subject to change without notice.

Downloaded from Arrow.com.

5. Ordering Information

5.1. MachXO2 Part Number Description

LXMXO2 – XXXX X X X – X XXXXXX X XX XX

Device Family
LCMXO2 = MachXO2 FPGA COM/IND
LAMXO2 = MachXO2 FPGA AUTO

Logic Capacity
256 = 256 LUTs
640 = 640 LUTs
1200 = 1280 LUTs
2000 = 2112 LUTs
4000 = 4320 LUTs
7000 = 6864 LUTs

I/O Count
Blank = Standard Device
U = Ultra High I/O Device

Power/Performance
Z = Low Power
H = High Performance

Supply Voltage
C = 2.5 V / 3.3 V
E = 1.2 V

Speed
1 = Slowest
2
3 = Fastest
} Low Power

4 = Slowest
5
6 = Fastest
} High Performance

Device Status
Blank = Production Device
ES = Engineering Sample
R1 = Production Release 1 Device
1K = WLCSP Package, 1,000 parts per reel

Shipping Method
Blank = Trays
TR = Tape and Reel

Grade
C = Commercial E = Automotive
I = Industrial

Package
UWG25 = 25-Ball Halogen-Free WLCSP (0.4 mm Pitch)
SG32 = 32-Pin Halogen-Free QFN (0.5 mm Pitch)
UWG36 = 36-Ball Halogen-Free WLSCP (0.4 mm Pitch)
SG48 = 48-Pin Halogen-Free QFN (0.5 mm Pitch)
UWG49 = 49-ball Halogen-Free WLCSP (0.4 mm Pitch)
UMG64 = 64-Ball Halogen-Free ucBGA (0.4 mm Pitch)
UWG81 = 81-Ball Halogen-Free WLCSP (0.4 mm Pitch)
QN84 = 84-Pin Halogen-Free QFN (0.5 mm Pitch)
TG100 = 100-Pin Halogen-Free TQFP
TG144 = 144-Pin Halogen-Free TQFP
MG132 = 132-Ball Halogen-Free csBGA (0.5 mm Pitch)
MG184 = 184-Ball Halogen-Free csBGA (0.5 mm Pitch)
BG256 = 256-Ball Halogen-Free caBGA (0.8 mm Pitch)
FTG256 = 256-Ball Halogen-Free ftBGA (1.0 mm Pitch)
BG332 = 332-Ball Halogen-Free caBGA (0.8 mm Pitch)
FG484 = 484-Ball Halogen-Free fpBGA (1.0 mm Pitch)

Figure 5.1. MachXO2 Part Number Description

© 2026 Lattice Semiconductor Corp. All Lattice trademarks, registered trademarks, patents, and disclaimers are as listed at www.latticesemi.com/legal.
All other brand or product names are trademarks or registered trademarks of their respective holders. The specifications and information herein are subject to change without notice.

Downloaded from Arrow.com.

5.2. Ordering Information

- For the following new devices, LAMXO2-256HC-5TG100E, LAMXO2-256HC-5MG132E, LAMXO2-640HC-5TG100E, and LAMXO2-640HC-5MG132E, the top-side marking below is used:

- For other MachXO2 devices, the top-side markings below are used:

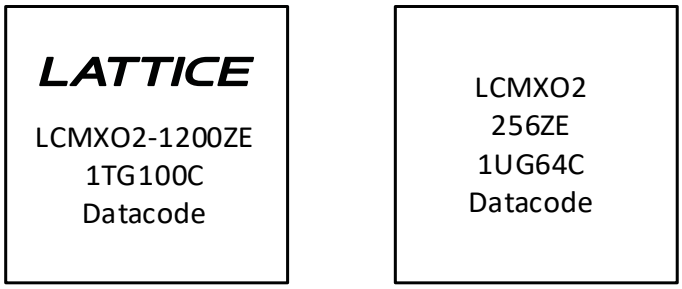

Notes:

1. Markings are abbreviated for small packages.
2. See PCN 05B-12 for information regarding a change to the top-side mark logo.

5.2.1. Ultra Low Power Commercial Grade Devices, Halogen Free (RoHS) Packaging

Table 5.1. Ultra Low Power Commercial Grade Devices, Halogen Free (RoHS) Packaging

Part Number	LUTs	Supply Voltage	Speed	Package	Leads	Temp.
LCMXO2-256ZE-1SG32C	256	1.2 V	–1	Halogen-Free QFN	32	COM
LCMXO2-256ZE-2SG32C	256	1.2 V	–2	Halogen-Free QFN	32	COM
LCMXO2-256ZE-3SG32C	256	1.2 V	–3	Halogen-Free QFN	32	COM
LCMXO2-256ZE-1UMG64C	256	1.2 V	–1	Halogen-Free ucBGA	64	COM
LCMXO2-256ZE-2UMG64C	256	1.2 V	–2	Halogen-Free ucBGA	64	COM
LCMXO2-256ZE-3UMG64C	256	1.2 V	–3	Halogen-Free ucBGA	64	COM
LCMXO2-256ZE-1TG100C	256	1.2 V	–1	Halogen-Free TQFP	100	COM
LCMXO2-256ZE-2TG100C	256	1.2 V	–2	Halogen-Free TQFP	100	COM
LCMXO2-256ZE-3TG100C	256	1.2 V	–3	Halogen-Free TQFP	100	COM
LCMXO2-256ZE-1MG132C	256	1.2 V	–1	Halogen-Free csBGA	132	COM
LCMXO2-256ZE-2MG132C	256	1.2 V	–2	Halogen-Free csBGA	132	COM
LCMXO2-256ZE-3MG132C	256	1.2 V	–3	Halogen-Free csBGA	132	COM
LCMXO2-640ZE-1TG100C	640	1.2 V	–1	Halogen-Free TQFP	100	COM
LCMXO2-640ZE-2TG100C	640	1.2 V	–2	Halogen-Free TQFP	100	COM
LCMXO2-640ZE-3TG100C	640	1.2 V	–3	Halogen-Free TQFP	100	COM
LCMXO2-640ZE-1MG132C	640	1.2 V	–1	Halogen-Free csBGA	132	COM

© 2026 Lattice Semiconductor Corp. All Lattice trademarks, registered trademarks, patents, and disclaimers are as listed at www.latticesemi.com/legal.
All other brand or product names are trademarks or registered trademarks of their respective holders. The specifications and information herein are subject to change without notice.

Downloaded from Arrow.com.

Part Number	LUTs	Supply Voltage	Speed	Package	Leads	Temp.
LCMXO2-640ZE-2MG132C	640	1.2 V	–2	Halogen-Free csBGA	132	COM
LCMXO2-640ZE-3MG132C	640	1.2 V	–3	Halogen-Free csBGA	132	COM
LCMXO2-1200ZE-1SG32C	1280	1.2 V	–1	Halogen-Free QFN	32	COM
LCMXO2-1200ZE-2SG32C	1280	1.2 V	–2	Halogen-Free QFN	32	COM
LCMXO2-1200ZE-3SG32C	1280	1.2 V	–3	Halogen-Free QFN	32	COM
LCMXO2-1200ZE-1TG100C	1280	1.2 V	–1	Halogen-Free TQFP	100	COM
LCMXO2-1200ZE-2TG100C	1280	1.2 V	–2	Halogen-Free TQFP	100	COM
LCMXO2-1200ZE-3TG100C	1280	1.2 V	–3	Halogen-Free TQFP	100	COM
LCMXO2-1200ZE-1MG132C	1280	1.2 V	–1	Halogen-Free csBGA	132	COM
LCMXO2-1200ZE-2MG132C	1280	1.2 V	–2	Halogen-Free csBGA	132	COM
LCMXO2-1200ZE-3MG132C	1280	1.2 V	–3	Halogen-Free csBGA	132	COM
LCMXO2-1200ZE-1TG144C	1280	1.2 V	–1	Halogen-Free TQFP	144	COM
LCMXO2-1200ZE-2TG144C	1280	1.2 V	–2	Halogen-Free TQFP	144	COM
LCMXO2-1200ZE-3TG144C	1280	1.2 V	–3	Halogen-Free TQFP	144	COM
LCMXO2-2000ZE-1TG100C	2112	1.2 V	–1	Halogen-Free TQFP	100	COM
LCMXO2-2000ZE-2TG100C	2112	1.2 V	–2	Halogen-Free TQFP	100	COM
LCMXO2-2000ZE-3TG100C	2112	1.2 V	–3	Halogen-Free TQFP	100	COM
LCMXO2-2000ZE-1MG132C	2112	1.2 V	–1	Halogen-Free csBGA	132	COM
LCMXO2-2000ZE-2MG132C	2112	1.2 V	–2	Halogen-Free csBGA	132	COM
LCMXO2-2000ZE-3MG132C	2112	1.2 V	–3	Halogen-Free csBGA	132	COM
LCMXO2-2000ZE-1TG144C	2112	1.2 V	–1	Halogen-Free TQFP	144	COM
LCMXO2-2000ZE-2TG144C	2112	1.2 V	–2	Halogen-Free TQFP	144	COM
LCMXO2-2000ZE-3TG144C	2112	1.2 V	–3	Halogen-Free TQFP	144	COM
LCMXO2-2000ZE-1BG256C	2112	1.2 V	–1	Halogen-Free caBGA	256	COM
LCMXO2-2000ZE-2BG256C	2112	1.2 V	–2	Halogen-Free caBGA	256	COM
LCMXO2-2000ZE-3BG256C	2112	1.2 V	–3	Halogen-Free caBGA	256	COM
LCMXO2-2000ZE-1FTG256C	2112	1.2 V	–1	Halogen-Free ftBGA	256	COM
LCMXO2-2000ZE-2FTG256C	2112	1.2 V	–2	Halogen-Free ftBGA	256	COM
LCMXO2-2000ZE-3FTG256C	2112	1.2 V	–3	Halogen-Free ftBGA	256	COM
LCMXO2-4000ZE-1QN84C	4320	1.2 V	–1	Halogen-Free QFN	84	COM
LCMXO2-4000ZE-2QN84C	4320	1.2 V	–2	Halogen-Free QFN	84	COM
LCMXO2-4000ZE-3QN84C	4320	1.2 V	–3	Halogen-Free QFN	84	COM
LCMXO2-4000ZE-1MG132C	4320	1.2 V	–1	Halogen-Free csBGA	132	COM
LCMXO2-4000ZE-2MG132C	4320	1.2 V	–2	Halogen-Free csBGA	132	COM
LCMXO2-4000ZE-3MG132C	4320	1.2 V	–3	Halogen-Free csBGA	132	COM
LCMXO2-4000ZE-1TG144C	4320	1.2 V	–1	Halogen-Free TQFP	144	COM
LCMXO2-4000ZE-2TG144C	4320	1.2 V	–2	Halogen-Free TQFP	144	COM
LCMXO2-4000ZE-3TG144C	4320	1.2 V	–3	Halogen-Free TQFP	144	COM
LCMXO2-4000ZE-1BG256C	4320	1.2 V	–1	Halogen-Free caBGA	256	COM
LCMXO2-4000ZE-2BG256C	4320	1.2 V	–2	Halogen-Free caBGA	256	COM
LCMXO2-4000ZE-3BG256C	4320	1.2 V	–3	Halogen-Free caBGA	256	COM
LCMXO2-4000ZE-1FTG256C	4320	1.2 V	–1	Halogen-Free ftBGA	256	COM
LCMXO2-4000ZE-2FTG256C	4320	1.2 V	–2	Halogen-Free ftBGA	256	COM
LCMXO2-4000ZE-3FTG256C	4320	1.2 V	–3	Halogen-Free ftBGA	256	COM
LCMXO2-4000ZE-1BG332C	4320	1.2 V	–1	Halogen-Free caBGA	332	COM
LCMXO2-4000ZE-2BG332C	4320	1.2 V	–2	Halogen-Free caBGA	332	COM

© 2026 Lattice Semiconductor Corp. All Lattice trademarks, registered trademarks, patents, and disclaimers are as listed at www.latticesemi.com/legal.
All other brand or product names are trademarks or registered trademarks of their respective holders. The specifications and information herein are subject to change without notice.

Downloaded from Arrow.com.

Part Number	LUTs	Supply Voltage	Speed	Package	Leads	Temp.
LCMXO2-4000ZE-3BG332C	4320	1.2 V	–3	Halogen-Free caBGA	332	COM
LCMXO2-4000ZE-1FG484C	4320	1.2 V	–1	Halogen-Free fpBGA	484	COM
LCMXO2-4000ZE-2FG484C	4320	1.2 V	–2	Halogen-Free fpBGA	484	COM
LCMXO2-4000ZE-3FG484C	4320	1.2 V	–3	Halogen-Free fpBGA	484	COM
LCMXO2-7000ZE-1TG144C	6864	1.2 V	–1	Halogen-Free TQFP	144	COM
LCMXO2-7000ZE-2TG144C	6864	1.2 V	–2	Halogen-Free TQFP	144	COM
LCMXO2-7000ZE-3TG144C	6864	1.2 V	–3	Halogen-Free TQFP	144	COM
LCMXO2-7000ZE-1BG256C	6864	1.2 V	–1	Halogen-Free caBGA	256	COM
LCMXO2-7000ZE-2BG256C	6864	1.2 V	–2	Halogen-Free caBGA	256	COM
LCMXO2-7000ZE-3BG256C	6864	1.2 V	–3	Halogen-Free caBGA	256	COM
LCMXO2-7000ZE-1FTG256C	6864	1.2 V	–1	Halogen-Free ftBGA	256	COM
LCMXO2-7000ZE-2FTG256C	6864	1.2 V	–2	Halogen-Free ftBGA	256	COM
LCMXO2-7000ZE-3FTG256C	6864	1.2 V	–3	Halogen-Free ftBGA	256	COM
LCMXO2-7000ZE-1BG332C	6864	1.2 V	–1	Halogen-Free caBGA	332	COM
LCMXO2-7000ZE-2BG332C	6864	1.2 V	–2	Halogen-Free caBGA	332	COM
LCMXO2-7000ZE-3BG332C	6864	1.2 V	–3	Halogen-Free caBGA	332	COM
LCMXO2-7000ZE-1FG484C	6864	1.2 V	–1	Halogen-Free fpBGA	484	COM
LCMXO2-7000ZE-2FG484C	6864	1.2 V	–2	Halogen-Free fpBGA	484	COM
LCMXO2-7000ZE-3FG484C	6864	1.2 V	–3	Halogen-Free fpBGA	484	COM
LCMXO2-1200ZE-1TG100CR1[1]	1280	1.2 V	–1	Halogen-Free TQFP	100	COM
LCMXO2-1200ZE-2TG100CR1[1]	1280	1.2 V	–2	Halogen-Free TQFP	100	COM
LCMXO2-1200ZE-3TG100CR1[1]	1280	1.2 V	–3	Halogen-Free TQFP	100	COM
LCMXO2-1200ZE-1MG132CR1[1]	1280	1.2 V	–1	Halogen-Free csBGA	132	COM
LCMXO2-1200ZE-2MG132CR1[1]	1280	1.2 V	–2	Halogen-Free csBGA	132	COM
LCMXO2-1200ZE-3MG132CR1[1]	1280	1.2 V	–3	Halogen-Free csBGA	132	COM
LCMXO2-1200ZE-1TG144CR1[1]	1280	1.2 V	–1	Halogen-Free TQFP	144	COM
LCMXO2-1200ZE-2TG144CR1[1]	1280	1.2 V	–2	Halogen-Free TQFP	144	COM
LCMXO2-1200ZE-3TG144CR1[1]	1280	1.2 V	–3	Halogen-Free TQFP	144	COM

Note:

1. Specifications for the “LCMXO2-1200ZE-speed package CR1” are the same as the “LCMXO2-1200ZE-speed package C” devices respectively, except as specified in the R1 Device Specifications section of this data sheet.

5.2.2. High-Performance Commercial Grade Devices with Voltage Regulator, Halogen Free (RoHS) Packaging

Table 5.2. High-Performance Commercial Grade Devices with Voltage Regulator, Halogen Free (RoHS) Packaging

Part Number	LUTs	Supply Voltage	Speed	Package	Leads	Temp.
LCMXO2-256HC-4SG32C	256	2.5 V / 3.3 V	–4	Halogen-Free QFN	32	COM
LCMXO2-256HC-5SG32C	256	2.5 V / 3.3 V	–5	Halogen-Free QFN	32	COM
LCMXO2-256HC-6SG32C	256	2.5 V / 3.3 V	–6	Halogen-Free QFN	32	COM
LCMXO2-256HC-4SG48C	256	2.5 V / 3.3 V	–4	Halogen-Free QFN	48	COM
LCMXO2-256HC-5SG48C	256	2.5 V / 3.3 V	–5	Halogen-Free QFN	48	COM
LCMXO2-256HC-6SG48C	256	2.5 V / 3.3 V	–6	Halogen-Free QFN	48	COM
LCMXO2-256HC-4UMG64C	256	2.5 V / 3.3 V	–4	Halogen-Free ucBGA	64	COM
LCMXO2-256HC-5UMG64C	256	2.5 V / 3.3 V	–5	Halogen-Free ucBGA	64	COM
LCMXO2-256HC-6UMG64C	256	2.5 V / 3.3 V	–6	Halogen-Free ucBGA	64	COM
LCMXO2-256HC-4TG100C	256	2.5 V / 3.3 V	–4	Halogen-Free TQFP	100	COM

© 2026 Lattice Semiconductor Corp. All Lattice trademarks, registered trademarks, patents, and disclaimers are as listed at www.latticesemi.com/legal.
All other brand or product names are trademarks or registered trademarks of their respective holders. The specifications and information herein are subject to change without notice.

Downloaded from Arrow.com.

Part Number	LUTs	Supply Voltage	Speed	Package	Leads	Temp.
LCMXO2-256HC-5TG100C	256	2.5 V / 3.3 V	–5	Halogen-Free TQFP	100	COM
LCMXO2-256HC-6TG100C	256	2.5 V / 3.3 V	–6	Halogen-Free TQFP	100	COM
LCMXO2-256HC-4MG132C	256	2.5 V / 3.3 V	–4	Halogen-Free csBGA	132	COM
LCMXO2-256HC-5MG132C	256	2.5 V / 3.3 V	–5	Halogen-Free csBGA	132	COM
LCMXO2-256HC-6MG132C	256	2.5 V / 3.3 V	–6	Halogen-Free csBGA	132	COM
LCMXO2-640HC-4SG48C	640	2.5 V / 3.3 V	–4	Halogen-Free QFN	48	COM
LCMXO2-640HC-5SG48C	640	2.5 V / 3.3 V	–5	Halogen-Free QFN	48	COM
LCMXO2-640HC-6SG48C	640	2.5 V / 3.3 V	–6	Halogen-Free QFN	48	COM
LCMXO2-640HC-4TG100C	640	2.5 V / 3.3 V	–4	Halogen-Free TQFP	100	COM
LCMXO2-640HC-5TG100C	640	2.5 V / 3.3 V	–5	Halogen-Free TQFP	100	COM
LCMXO2-640HC-6TG100C	640	2.5 V / 3.3 V	–6	Halogen-Free TQFP	100	COM
LCMXO2-640HC-4MG132C	640	2.5 V / 3.3 V	–4	Halogen-Free csBGA	132	COM
LCMXO2-640HC-5MG132C	640	2.5 V / 3.3 V	–5	Halogen-Free csBGA	132	COM
LCMXO2-640HC-6MG132C	640	2.5 V / 3.3 V	–6	Halogen-Free csBGA	132	COM
LCMXO2-640UHC-4TG144C	640	2.5 V / 3.3 V	–4	Halogen-Free TQFP	144	COM
LCMXO2-640UHC-5TG144C	640	2.5 V / 3.3 V	–5	Halogen-Free TQFP	144	COM
LCMXO2-640UHC-6TG144C	640	2.5 V / 3.3 V	–6	Halogen-Free TQFP	144	COM
LCMXO2-1200HC-4SG32C	1280	2.5 V / 3.3 V	–4	Halogen-Free QFN	32	COM
LCMXO2-1200HC-5SG32C	1280	2.5 V / 3.3 V	–5	Halogen-Free QFN	32	COM
LCMXO2-1200HC-6SG32C	1280	2.5 V / 3.3 V	–6	Halogen-Free QFN	32	COM
LCMXO2-1200HC-4TG100C	1280	2.5 V / 3.3 V	–4	Halogen-Free TQFP	100	COM
LCMXO2-1200HC-5TG100C	1280	2.5 V / 3.3 V	–5	Halogen-Free TQFP	100	COM
LCMXO2-1200HC-6TG100C	1280	2.5 V / 3.3 V	–6	Halogen-Free TQFP	100	COM
LCMXO2-1200HC-4MG132C	1280	2.5 V / 3.3 V	–4	Halogen-Free csBGA	132	COM
LCMXO2-1200HC-5MG132C	1280	2.5 V / 3.3 V	–5	Halogen-Free csBGA	132	COM
LCMXO2-1200HC-6MG132C	1280	2.5 V / 3.3 V	–6	Halogen-Free csBGA	132	COM
LCMXO2-1200HC-4TG144C	1280	2.5 V / 3.3 V	–4	Halogen-Free TQFP	144	COM
LCMXO2-1200HC-5TG144C	1280	2.5 V / 3.3 V	–5	Halogen-Free TQFP	144	COM
LCMXO2-1200HC-6TG144C	1280	2.5 V / 3.3 V	–6	Halogen-Free TQFP	144	COM
LCMXO2-1200UHC-4FTG256C	1280	2.5 V / 3.3 V	–4	Halogen-Free ftBGA	256	COM
LCMXO2-1200UHC-5FTG256C	1280	2.5 V / 3.3 V	–5	Halogen-Free ftBGA	256	COM
LCMXO2-1200UHC-6FTG256C	1280	2.5 V / 3.3 V	–6	Halogen-Free ftBGA	256	COM
LCMXO2-2000HC-4TG100C	2112	2.5 V / 3.3 V	–4	Halogen-Free TQFP	100	COM
LCMXO2-2000HC-5TG100C	2112	2.5 V / 3.3 V	–5	Halogen-Free TQFP	100	COM
LCMXO2-2000HC-6TG100C	2112	2.5 V / 3.3 V	–6	Halogen-Free TQFP	100	COM
LCMXO2-2000HC-4MG132C	2112	2.5 V / 3.3 V	–4	Halogen-Free csBGA	132	COM
LCMXO2-2000HC-5MG132C	2112	2.5 V / 3.3 V	–5	Halogen-Free csBGA	132	COM
LCMXO2-2000HC-6MG132C	2112	2.5 V / 3.3 V	–6	Halogen-Free csBGA	132	COM
LCMXO2-2000HC-4TG144C	2112	2.5 V / 3.3 V	–4	Halogen-Free TQFP	144	COM
LCMXO2-2000HC-5TG144C	2112	2.5 V / 3.3 V	–5	Halogen-Free TQFP	144	COM
LCMXO2-2000HC-6TG144C	2112	2.5 V / 3.3 V	–6	Halogen-Free TQFP	144	COM
LCMXO2-2000HC-4BG256C	2112	2.5 V / 3.3 V	–4	Halogen-Free caBGA	256	COM
LCMXO2-2000HC-5BG256C	2112	2.5 V / 3.3 V	–5	Halogen-Free caBGA	256	COM
LCMXO2-2000HC-6BG256C	2112	2.5 V / 3.3 V	–6	Halogen-Free caBGA	256	COM
LCMXO2-2000HC-4FTG256C	2112	2.5 V / 3.3 V	–4	Halogen-Free ftBGA	256	COM
LCMXO2-2000HC-5FTG256C	2112	2.5 V / 3.3 V	–5	Halogen-Free ftBGA	256	COM

© 2026 Lattice Semiconductor Corp. All Lattice trademarks, registered trademarks, patents, and disclaimers are as listed at www.latticesemi.com/legal.
All other brand or product names are trademarks or registered trademarks of their respective holders. The specifications and information herein are subject to change without notice.

Downloaded from Arrow.com.

Part Number	LUTs	Supply Voltage	Speed	Package	Leads	Temp.
LCMXO2-2000HC-6FTG256C	2112	2.5 V / 3.3 V	–6	Halogen-Free ftBGA	256	COM
LCMXO2-2000UHC-4FG484C	2112	2.5 V / 3.3 V	–4	Halogen-Free fpBGA	484	COM
LCMXO2-2000UHC-5FG484C	2112	2.5 V / 3.3 V	–5	Halogen-Free fpBGA	484	COM
LCMXO2-2000UHC-6FG484C	2112	2.5 V / 3.3 V	–6	Halogen-Free fpBGA	484	COM
LCMXO2-4000HC-4QN84C	4320	2.5 V / 3.3 V	–4	Halogen-Free QFN	84	COM
LCMXO2-4000HC-5QN84C	4320	2.5 V / 3.3 V	–5	Halogen-Free QFN	84	COM
LCMXO2-4000HC-6QN84C	4320	2.5 V / 3.3 V	–6	Halogen-Free QFN	84	COM
LCMXO2-4000HC-4MG132C	4320	2.5 V / 3.3 V	–4	Halogen-Free csBGA	132	COM
LCMXO2-4000HC-5MG132C	4320	2.5 V / 3.3 V	–5	Halogen-Free csBGA	132	COM
LCMXO2-4000HC-6MG132C	4320	2.5 V / 3.3 V	–6	Halogen-Free csBGA	132	COM
LCMXO2-4000HC-4TG144C	4320	2.5 V / 3.3 V	–4	Halogen-Free TQFP	144	COM
LCMXO2-4000HC-5TG144C	4320	2.5 V / 3.3 V	–5	Halogen-Free TQFP	144	COM
LCMXO2-4000HC-6TG144C	4320	2.5 V / 3.3 V	–6	Halogen-Free TQFP	144	COM
LCMXO2-4000HC-4BG256C	4320	2.5 V / 3.3 V	–4	Halogen-Free caBGA	256	COM
LCMXO2-4000HC-5BG256C	4320	2.5 V / 3.3 V	–5	Halogen-Free caBGA	256	COM
LCMXO2-4000HC-6BG256C	4320	2.5 V / 3.3 V	–6	Halogen-Free caBGA	256	COM
LCMXO2-4000HC-4FTG256C	4320	2.5 V / 3.3 V	–4	Halogen-Free ftBGA	256	COM
LCMXO2-4000HC-5FTG256C	4320	2.5 V / 3.3 V	–5	Halogen-Free ftBGA	256	COM
LCMXO2-4000HC-6FTG256C	4320	2.5 V / 3.3 V	–6	Halogen-Free ftBGA	256	COM
LCMXO2-4000HC-4BG332C	4320	2.5 V / 3.3 V	–4	Halogen-Free caBGA	332	COM
LCMXO2-4000HC-5BG332C	4320	2.5 V / 3.3 V	–5	Halogen-Free caBGA	332	COM
LCMXO2-4000HC-6BG332C	4320	2.5 V / 3.3 V	–6	Halogen-Free caBGA	332	COM
LCMXO2-4000HC-4FG484C	4320	2.5 V / 3.3 V	–4	Halogen-Free fpBGA	484	COM
LCMXO2-4000HC-5FG484C	4320	2.5 V / 3.3 V	–5	Halogen-Free fpBGA	484	COM
LCMXO2-4000HC-6FG484C	4320	2.5 V / 3.3 V	–6	Halogen-Free fpBGA	484	COM
LCMXO2-7000HC-4TG144C	6864	2.5 V / 3.3 V	–4	Halogen-Free TQFP	144	COM
LCMXO2-7000HC-5TG144C	6864	2.5 V / 3.3 V	–5	Halogen-Free TQFP	144	COM
LCMXO2-7000HC-6TG144C	6864	2.5 V / 3.3 V	–6	Halogen-Free TQFP	144	COM
LCMXO2-7000HC-4BG256C	6864	2.5 V / 3.3 V	–4	Halogen-Free caBGA	256	COM
LCMXO2-7000HC-5BG256C	6864	2.5 V / 3.3 V	–5	Halogen-Free caBGA	256	COM
LCMXO2-7000HC-6BG256C	6864	2.5 V / 3.3 V	–6	Halogen-Free caBGA	256	COM
LCMXO2-7000HC-4FTG256C	6864	2.5 V / 3.3 V	–4	Halogen-Free ftBGA	256	COM
LCMXO2-7000HC-5FTG256C	6864	2.5 V / 3.3 V	–5	Halogen-Free ftBGA	256	COM
LCMXO2-7000HC-6FTG256C	6864	2.5 V / 3.3 V	–6	Halogen-Free ftBGA	256	COM
LCMXO2-7000HC-4BG332C	6864	2.5 V / 3.3 V	–4	Halogen-Free caBGA	332	COM
LCMXO2-7000HC-5BG332C	6864	2.5 V / 3.3 V	–5	Halogen-Free caBGA	332	COM
LCMXO2-7000HC-6BG332C	6864	2.5 V / 3.3 V	–6	Halogen-Free caBGA	332	COM
LCMXO2-7000HC-4FG484C	6864	2.5 V / 3.3 V	–4	Halogen-Free fpBGA	484	COM
LCMXO2-7000HC-5FG484C	6864	2.5 V / 3.3 V	–5	Halogen-Free fpBGA	484	COM
LCMXO2-7000HC-6FG484C	6864	2.5 V / 3.3 V	–6	Halogen-Free fpBGA	484	COM
LCMXO2-1200HC-4TG100CR[1]	1280	2.5 V / 3.3 V	–4	Halogen-Free TQFP	100	COM
LCMXO2-1200HC-5TG100CR[1]	1280	2.5 V / 3.3 V	–5	Halogen-Free TQFP	100	COM
LCMXO2-1200HC-6TG100CR[1]	1280	2.5 V / 3.3 V	–6	Halogen-Free TQFP	100	COM
LCMXO2-1200HC-4MG132CR[1]	1280	2.5 V / 3.3 V	–4	Halogen-Free csBGA	132	COM
LCMXO2-1200HC-5MG132CR[1]	1280	2.5 V / 3.3 V	–5	Halogen-Free csBGA	132	COM
LCMXO2-1200HC-6MG132CR[1]	1280	2.5 V / 3.3 V	–6	Halogen-Free csBGA	132	COM

© 2026 Lattice Semiconductor Corp. All Lattice trademarks, registered trademarks, patents, and disclaimers are as listed at www.latticesemi.com/legal.
All other brand or product names are trademarks or registered trademarks of their respective holders. The specifications and information herein are subject to change without notice.

Downloaded from Arrow.com.

Part Number	LUTs	Supply Voltage	Speed	Package	Leads	Temp.
LCMXO2-1200HC-4TG144CR[1]	1280	2.5 V / 3.3 V	–4	Halogen-Free TQFP	144	COM
LCMXO2-1200HC-5TG144CR[1]	1280	2.5 V / 3.3 V	–5	Halogen-Free TQFP	144	COM
LCMXO2-1200HC-6TG144CR[1]	1280	2.5 V / 3.3 V	–6	Halogen-Free TQFP	144	COM

Note:

1. Specifications for the "LCMXO2-1200HC-speed package CR1" are the same as the "LCMXO2-1200HC-speed package C" devices respectively, except as specified in the R1 Device Specifications of this data sheet.

5.2.3. High-Performance Commercial Grade Devices without Voltage Regulator, Halogen Free (RoHS) Packaging

Table 5.3. High-Performance Commercial Grade Devices without Voltage Regulator, Halogen Free (RoHS) Packaging

Part Number	LUTs	Supply Voltage	Speed	Package	Leads	Temp.
LCMXO2-2000HE-4TG100C	2112	1.2 V	–4	Halogen-Free TQFP	100	COM
LCMXO2-2000HE-5TG100C	2112	1.2 V	–5	Halogen-Free TQFP	100	COM
LCMXO2-2000HE-6TG100C	2112	1.2 V	–6	Halogen-Free TQFP	100	COM
LCMXO2-2000HE-4TG144C	2112	1.2 V	–4	Halogen-Free TQFP	144	COM
LCMXO2-2000HE-5TG144C	2112	1.2 V	–5	Halogen-Free TQFP	144	COM
LCMXO2-2000HE-6TG144C	2112	1.2 V	–6	Halogen-Free TQFP	144	COM
LCMXO2-2000HE-4MG132C	2112	1.2 V	–4	Halogen-Free csBGA	132	COM
LCMXO2-2000HE-5MG132C	2112	1.2 V	–5	Halogen-Free csBGA	132	COM
LCMXO2-2000HE-6MG132C	2112	1.2 V	–6	Halogen-Free csBGA	132	COM
LCMXO2-2000HE-4BG256C	2112	1.2 V	–4	Halogen-Free caBGA	256	COM
LCMXO2-2000HE-5BG256C	2112	1.2 V	–5	Halogen-Free caBGA	256	COM
LCMXO2-2000HE-6BG256C	2112	1.2 V	–6	Halogen-Free caBGA	256	COM
LCMXO2-2000HE-4FTG256C	2112	1.2 V	–4	Halogen-Free ftBGA	256	COM
LCMXO2-2000HE-5FTG256C	2112	1.2 V	–5	Halogen-Free ftBGA	256	COM
LCMXO2-2000HE-6FTG256C	2112	1.2 V	–6	Halogen-Free ftBGA	256	COM
LCMXO2-2000UHE-4FG484C	2112	1.2 V	–4	Halogen-Free fpBGA	484	COM
LCMXO2-2000UHE-5FG484C	2112	1.2 V	–5	Halogen-Free fpBGA	484	COM
LCMXO2-2000UHE-6FG484C	2112	1.2 V	–6	Halogen-Free fpBGA	484	COM
LCMXO2-4000HE-4TG144C	4320	1.2 V	–4	Halogen-Free TQFP	144	COM
LCMXO2-4000HE-5TG144C	4320	1.2 V	–5	Halogen-Free TQFP	144	COM
LCMXO2-4000HE-6TG144C	4320	1.2 V	–6	Halogen-Free TQFP	144	COM
LCMXO2-4000HE-4MG132C	4320	1.2 V	–4	Halogen-Free csBGA	132	COM
LCMXO2-4000HE-5MG132C	4320	1.2 V	–5	Halogen-Free csBGA	132	COM
LCMXO2-4000HE-6MG132C	4320	1.2 V	–6	Halogen-Free csBGA	132	COM
LCMXO2-4000HE-4BG256C	4320	1.2 V	–4	Halogen-Free caBGA	256	COM
LCMXO2-4000HE-4MG184C	4320	1.2 V	–4	Halogen-Free csBGA	184	COM
LCMXO2-4000HE-5MG184C	4320	1.2 V	–5	Halogen-Free csBGA	184	COM
LCMXO2-4000HE-6MG184C	4320	1.2 V	–6	Halogen-Free csBGA	184	COM
LCMXO2-4000HE-5BG256C	4320	1.2 V	–5	Halogen-Free caBGA	256	COM
LCMXO2-4000HE-6BG256C	4320	1.2 V	–6	Halogen-Free caBGA	256	COM
LCMXO2-4000HE-4FTG256C	4320	1.2 V	–4	Halogen-Free ftBGA	256	COM
LCMXO2-4000HE-5FTG256C	4320	1.2 V	–5	Halogen-Free ftBGA	256	COM
LCMXO2-4000HE-6FTG256C	4320	1.2 V	–6	Halogen-Free ftBGA	256	COM
LCMXO2-4000HE-4BG332C	4320	1.2 V	–4	Halogen-Free caBGA	332	COM
LCMXO2-4000HE-5BG332C	4320	1.2 V	–5	Halogen-Free caBGA	332	COM

© 2026 Lattice Semiconductor Corp. All Lattice trademarks, registered trademarks, patents, and disclaimers are as listed at www.latticesemi.com/legal.
All other brand or product names are trademarks or registered trademarks of their respective holders. The specifications and information herein are subject to change without notice.

Downloaded from Arrow.com.

Part Number	LUTs	Supply Voltage	Speed	Package	Leads	Temp.
LCMXO2-4000HE-6BG332C	4320	1.2 V	–6	Halogen-Free caBGA	332	COM
LCMXO2-4000HE-4FG484C	4320	1.2 V	–4	Halogen-Free fpBGA	484	COM
LCMXO2-4000HE-5FG484C	4320	1.2 V	–5	Halogen-Free fpBGA	484	COM
LCMXO2-4000HE-6FG484C	4320	1.2 V	–6	Halogen-Free fpBGA	484	COM
LCMXO2-7000HE-4TG144C	6864	1.2 V	–4	Halogen-Free TQFP	144	COM
LCMXO2-7000HE-5TG144C	6864	1.2 V	–5	Halogen-Free TQFP	144	COM
LCMXO2-7000HE-6TG144C	6864	1.2 V	–6	Halogen-Free TQFP	144	COM
LCMXO2-7000HE-4BG256C	6864	1.2 V	–4	Halogen-Free caBGA	256	COM
LCMXO2-7000HE-5BG256C	6864	1.2 V	–5	Halogen-Free caBGA	256	COM
LCMXO2-7000HE-6BG256C	6864	1.2 V	–6	Halogen-Free caBGA	256	COM
LCMXO2-7000HE-4FTG256C	6864	1.2 V	–4	Halogen-Free ftBGA	256	COM
LCMXO2-7000HE-5FTG256C	6864	1.2 V	–5	Halogen-Free ftBGA	256	COM
LCMXO2-7000HE-6FTG256C	6864	1.2 V	–6	Halogen-Free ftBGA	256	COM
LCMXO2-7000HE-4BG332C	6864	1.2 V	–4	Halogen-Free caBGA	332	COM
LCMXO2-7000HE-5BG332C	6864	1.2 V	–5	Halogen-Free caBGA	332	COM
LCMXO2-7000HE-6BG332C	6864	1.2 V	–6	Halogen-Free caBGA	332	COM
LCMXO2-7000HE-4FG484C	6864	1.2 V	–4	Halogen-Free fpBGA	484	COM
LCMXO2-7000HE-5FG484C	6864	1.2 V	–5	Halogen-Free fpBGA	484	COM
LCMXO2-7000HE-6FG484C	6864	1.2 V	–6	Halogen-Free fpBGA	484	COM

5.2.4. Ultra Low Power Industrial Grade Devices, Halogen Free (RoHS) Packaging

Table 5.4. Ultra Low Power Industrial Grade Devices, Halogen Free (RoHS) Packaging

Part Number	LUTs	Supply Voltage	Speed	Package	Leads	Temp.
LCMXO2-256ZE-1SG32I	256	1.2 V	–1	Halogen-Free QFN	32	IND
LCMXO2-256ZE-2SG32I	256	1.2 V	–2	Halogen-Free QFN	32	IND
LCMXO2-256ZE-3SG32I	256	1.2 V	–3	Halogen-Free QFN	32	IND
LCMXO2-256ZE-1UMG64I	256	1.2 V	–1	Halogen-Free ucBGA	64	IND
LCMXO2-256ZE-2UMG64I	256	1.2 V	–2	Halogen-Free ucBGA	64	IND
LCMXO2-256ZE-3UMG64I	256	1.2 V	–3	Halogen-Free ucBGA	64	IND
LCMXO2-256ZE-1TG100I	256	1.2 V	–1	Halogen-Free TQFP	100	IND
LCMXO2-256ZE-2TG100I	256	1.2 V	–2	Halogen-Free TQFP	100	IND
LCMXO2-256ZE-3TG100I	256	1.2 V	–3	Halogen-Free TQFP	100	IND
LCMXO2-256ZE-1MG132I	256	1.2 V	–1	Halogen-Free csBGA	132	IND
LCMXO2-256ZE-2MG132I	256	1.2 V	–2	Halogen-Free csBGA	132	IND
LCMXO2-256ZE-3MG132I	256	1.2 V	–3	Halogen-Free csBGA	132	IND
LCMXO2-640ZE-1TG100I	640	1.2 V	–1	Halogen-Free TQFP	100	IND
LCMXO2-640ZE-2TG100I	640	1.2 V	–2	Halogen-Free TQFP	100	IND
LCMXO2-640ZE-3TG100I	640	1.2 V	–3	Halogen-Free TQFP	100	IND
LCMXO2-640ZE-1MG132I	640	1.2 V	–1	Halogen-Free csBGA	132	IND
LCMXO2-640ZE-2MG132I	640	1.2 V	–2	Halogen-Free csBGA	132	IND
LCMXO2-640ZE-3MG132I	640	1.2 V	–3	Halogen-Free csBGA	132	IND
LCMXO2-1200ZE-1UWG25ITR[1]	1280	1.2 V	–1	Halogen-Free WLCSP	25	IND
LCMXO2-1200ZE-1UWG25ITR50[3]	1280	1.2 V	–1	Halogen-Free WLCSP	25	IND
LCMXO2-1200ZE-1UWG25ITR1K[2]	1280	1.2 V	–1	Halogen-Free WLCSP	25	IND
LCMXO2-1200ZE-1UWG36ITR[1]	1280	1.2 V	–1	Halogen-Free WLCSP	36	IND

© 2026 Lattice Semiconductor Corp. All Lattice trademarks, registered trademarks, patents, and disclaimers are as listed at www.latticesemi.com/legal.
All other brand or product names are trademarks or registered trademarks of their respective holders. The specifications and information herein are subject to change without notice.

Downloaded from Arrow.com.

Part Number	LUTs	Supply Voltage	Speed	Package	Leads	Temp.
LCMXO2-1200ZE-1UWG36ITR1K[2]	1280	1.2 V	–1	Halogen-Free WLCSP	36	IND
LCMXO2-1200ZE-1SG32I	1280	1.2 V	–1	Halogen-Free QFN	32	IND
LCMXO2-1200ZE-2SG32I	1280	1.2 V	–2	Halogen-Free QFN	32	IND
LCMXO2-1200ZE-3SG32I	1280	1.2 V	–3	Halogen-Free QFN	32	IND
LCMXO2-1200ZE-1TG100I	1280	1.2 V	–1	Halogen-Free TQFP	100	IND
LCMXO2-1200ZE-2TG100I	1280	1.2 V	–2	Halogen-Free TQFP	100	IND
LCMXO2-1200ZE-3TG100I	1280	1.2 V	–3	Halogen-Free TQFP	100	IND
LCMXO2-1200ZE-1MG132I	1280	1.2 V	–1	Halogen-Free csBGA	132	IND
LCMXO2-1200ZE-2MG132I	1280	1.2 V	–2	Halogen-Free csBGA	132	IND
LCMXO2-1200ZE-3MG132I	1280	1.2 V	–3	Halogen-Free csBGA	132	IND
LCMXO2-1200ZE-1TG144I	1280	1.2 V	–1	Halogen-Free TQFP	144	IND
LCMXO2-1200ZE-2TG144I	1280	1.2 V	–2	Halogen-Free TQFP	144	IND
LCMXO2-1200ZE-3TG144I	1280	1.2 V	–3	Halogen-Free TQFP	144	IND
LCMXO2-2000ZE-1UWG49ITR[1]	2112	1.2 V	–1	Halogen-Free WLCSP	49	IND
LCMXO2-2000ZE-1UWG49ITR50[3]	2112	1.2 V	–1	Halogen-Free WLCSP	49	IND
LCMXO2-2000ZE-1UWG49ITR1K[2]	2112	1.2 V	–1	Halogen-Free WLCSP	49	IND
LCMXO2-2000ZE-1TG100I	2112	1.2 V	–1	Halogen-Free TQFP	100	IND
LCMXO2-2000ZE-2TG100I	2112	1.2 V	–2	Halogen-Free TQFP	100	IND
LCMXO2-2000ZE-3TG100I	2112	1.2 V	–3	Halogen-Free TQFP	100	IND
LCMXO2-2000ZE-1MG132I	2112	1.2 V	–1	Halogen-Free csBGA	132	IND
LCMXO2-2000ZE-2MG132I	2112	1.2 V	–2	Halogen-Free csBGA	132	IND
LCMXO2-2000ZE-3MG132I	2112	1.2 V	–3	Halogen-Free csBGA	132	IND
LCMXO2-2000ZE-1TG144I	2112	1.2 V	–1	Halogen-Free TQFP	144	IND
LCMXO2-2000ZE-2TG144I	2112	1.2 V	–2	Halogen-Free TQFP	144	IND
LCMXO2-2000ZE-3TG144I	2112	1.2 V	–3	Halogen-Free TQFP	144	IND
LCMXO2-2000ZE-1BG256I	2112	1.2 V	–1	Halogen-Free caBGA	256	IND
LCMXO2-2000ZE-2BG256I	2112	1.2 V	–2	Halogen-Free caBGA	256	IND
LCMXO2-2000ZE-3BG256I	2112	1.2 V	–3	Halogen-Free caBGA	256	IND
LCMXO2-2000ZE-1FTG256I	2112	1.2 V	–1	Halogen-Free ftBGA	256	IND
LCMXO2-2000ZE-2FTG256I	2112	1.2 V	–2	Halogen-Free ftBGA	256	IND
LCMXO2-2000ZE-3FTG256I	2112	1.2 V	–3	Halogen-Free ftBGA	256	IND
LCMXO2-4000ZE-1UWG81ITR[1]	4320	1.2 V	–1	Halogen-Free WLCSP	81	IND
LCMXO2-4000ZE-1UWG81ITR1K[2]	4320	1.2 V	–1	Halogen-Free WLCSP	81	IND
LCMXO2-4000ZE-1QN84I	4320	1.2 V	–1	Halogen-Free QFN	84	IND
LCMXO2-4000ZE-2QN84I	4320	1.2 V	–2	Halogen-Free QFN	84	IND
LCMXO2-4000ZE-3QN84I	4320	1.2 V	–3	Halogen-Free QFN	84	IND
LCMXO2-4000ZE-1MG132I	4320	1.2 V	–1	Halogen-Free csBGA	132	IND
LCMXO2-4000ZE-2MG132I	4320	1.2 V	–2	Halogen-Free csBGA	132	IND
LCMXO2-4000ZE-3MG132I	4320	1.2 V	–3	Halogen-Free csBGA	132	IND
LCMXO2-4000ZE-1TG144I	4320	1.2 V	–1	Halogen-Free TQFP	144	IND
LCMXO2-4000ZE-2TG144I	4320	1.2 V	–2	Halogen-Free TQFP	144	IND
LCMXO2-4000ZE-3TG144I	4320	1.2 V	–3	Halogen-Free TQFP	144	IND
LCMXO2-4000ZE-1BG256I	4320	1.2 V	–1	Halogen-Free caBGA	256	IND
LCMXO2-4000ZE-2BG256I	4320	1.2 V	–2	Halogen-Free caBGA	256	IND
LCMXO2-4000ZE-3BG256I	4320	1.2 V	–3	Halogen-Free caBGA	256	IND
LCMXO2-4000ZE-1FTG256I	4320	1.2 V	–1	Halogen-Free ftBGA	256	IND

© 2026 Lattice Semiconductor Corp. All Lattice trademarks, registered trademarks, patents, and disclaimers are as listed at www.latticesemi.com/legal.
All other brand or product names are trademarks or registered trademarks of their respective holders. The specifications and information herein are subject to change without notice.

Downloaded from Arrow.com.

Part Number	LUTs	Supply Voltage	Speed	Package	Leads	Temp.
LCMXO2-4000ZE-2FTG256I	4320	1.2 V	–2	Halogen-Free ftBGA	256	IND
LCMXO2-4000ZE-3FTG256I	4320	1.2 V	–3	Halogen-Free ftBGA	256	IND
LCMXO2-4000ZE-1BG332I	4320	1.2 V	–1	Halogen-Free caBGA	332	IND
LCMXO2-4000ZE-2BG332I	4320	1.2 V	–2	Halogen-Free caBGA	332	IND
LCMXO2-4000ZE-3BG332I	4320	1.2 V	–3	Halogen-Free caBGA	332	IND
LCMXO2-4000ZE-1FG484I	4320	1.2 V	–1	Halogen-Free fpBGA	484	IND
LCMXO2-4000ZE-2FG484I	4320	1.2 V	–2	Halogen-Free fpBGA	484	IND
LCMXO2-4000ZE-3FG484I	4320	1.2 V	–3	Halogen-Free fpBGA	484	IND
LCMXO2-7000ZE-1TG144I	6864	1.2 V	–1	Halogen-Free TQFP	144	IND
LCMXO2-7000ZE-2TG144I	6864	1.2 V	–2	Halogen-Free TQFP	144	IND
LCMXO2-7000ZE-3TG144I	6864	1.2 V	–3	Halogen-Free TQFP	144	IND
LCMXO2-7000ZE-1BG256I	6864	1.2 V	–1	Halogen-Free caBGA	256	IND
LCMXO2-7000ZE-2BG256I	6864	1.2 V	–2	Halogen-Free caBGA	256	IND
LCMXO2-7000ZE-3BG256I	6864	1.2 V	–3	Halogen-Free caBGA	256	IND
LCMXO2-7000ZE-1FTG256I	6864	1.2 V	–1	Halogen-Free ftBGA	256	IND
LCMXO2-7000ZE-2FTG256I	6864	1.2 V	–2	Halogen-Free ftBGA	256	IND
LCMXO2-7000ZE-3FTG256I	6864	1.2 V	–3	Halogen-Free ftBGA	256	IND
LCMXO2-7000ZE-1BG332I	6864	1.2 V	–1	Halogen-Free caBGA	332	IND
LCMXO2-7000ZE-2BG332I	6864	1.2 V	–2	Halogen-Free caBGA	332	IND
LCMXO2-7000ZE-3BG332I	6864	1.2 V	–3	Halogen-Free caBGA	332	IND
LCMXO2-7000ZE-1FG484I	6864	1.2 V	–1	Halogen-Free fpBGA	484	IND
LCMXO2-7000ZE-2FG484I	6864	1.2 V	–2	Halogen-Free fpBGA	484	IND
LCMXO2-7000ZE-3FG484I	6864	1.2 V	–3	Halogen-Free fpBGA	484	IND
LCMXO2-1200ZE-1TG100IR1[4]	1280	1.2 V	–1	Halogen-Free TQFP	100	IND
LCMXO2-1200ZE-2TG100IR1[4]	1280	1.2 V	–2	Halogen-Free TQFP	100	IND
LCMXO2-1200ZE-3TG100IR1[4]	1280	1.2 V	–3	Halogen-Free TQFP	100	IND
LCMXO2-1200ZE-1MG132IR1[4]	1280	1.2 V	–1	Halogen-Free csBGA	132	IND
LCMXO2-1200ZE-2MG132IR1[4]	1280	1.2 V	–2	Halogen-Free csBGA	132	IND
LCMXO2-1200ZE-3MG132IR1[4]	1280	1.2 V	–3	Halogen-Free csBGA	132	IND
LCMXO2-1200ZE-1TG144IR1[4]	1280	1.2 V	–1	Halogen-Free TQFP	144	IND
LCMXO2-1200ZE-2TG144IR1[4]	1280	1.2 V	–2	Halogen-Free TQFP	144	IND
LCMXO2-1200ZE-3TG144IR1[4]	1280	1.2 V	–3	Halogen-Free TQFP	144	IND

Notes:

1. This part number has a tape and reel quantity of 5,000 units with a minimum order quantity of 10,000 units. Order quantities must be in increments of 5,000 units. For example, a 10,000 unit order is shipped in two reels with one reel containing 5,000 units and the other reel with less than 5,000 units (depending on test yields). Unserviced backlog is canceled.
2. This part number has a tape and reel quantity of 1,000 units with a minimum order quantity of 1,000. Order quantities must be in increments of 1,000 units. For example, a 5,000 unit order is shipped as 5 reels of 1000 units each.
3. This part number has a tape and reel quantity of 50 units with a minimum order quantity of 50. Order quantities must be in increments of 50 units. For example, a 1,000 unit order is shipped as 20 reels of 50 units each.
4. Specifications for the “LCMXO2-1200ZE-speed package IR1” are the same as the “LCMXO2-1200ZE-speed package I” devices respectively, except as specified in the R1 Device Specifications section of this data sheet.

© 2026 Lattice Semiconductor Corp. All Lattice trademarks, registered trademarks, patents, and disclaimers are as listed at www.latticesemi.com/legal.
All other brand or product names are trademarks or registered trademarks of their respective holders. The specifications and information herein are subject to change without notice.

Downloaded from Arrow.com.

5.2.5. High-Performance Industrial Grade Devices with Voltage Regulator, Halogen Free (RoHS) Packaging

Table 5.5. High-Performance Industrial Grade Devices with Voltage Regulator, Halogen Free (RoHS) Packaging

Part Number	LUTs	Supply Voltage	Speed	Package	Leads	Temp.
LCMXO2-256HC-4SG32I	256	2.5 V / 3.3 V	–4	Halogen-Free QFN	32	IND
LCMXO2-256HC-5SG32I	256	2.5 V / 3.3 V	–5	Halogen-Free QFN	32	IND
LCMXO2-256HC-6SG32I	256	2.5 V / 3.3 V	–6	Halogen-Free QFN	32	IND
LCMXO2-256HC-4SG48I	256	2.5 V / 3.3 V	–4	Halogen-Free QFN	48	IND
LCMXO2-256HC-5SG48I	256	2.5 V / 3.3 V	–5	Halogen-Free QFN	48	IND
LCMXO2-256HC-6SG48I	256	2.5 V / 3.3 V	–6	Halogen-Free QFN	48	IND
LCMXO2-256HC-4UMG64I	256	2.5 V / 3.3 V	–4	Halogen-Free ucBGA	64	IND
LCMXO2-256HC-5UMG64I	256	2.5 V / 3.3 V	–5	Halogen-Free ucBGA	64	IND
LCMXO2-256HC-6UMG64I	256	2.5 V / 3.3 V	–6	Halogen-Free ucBGA	64	IND
LCMXO2-256HC-4TG100I	256	2.5 V / 3.3 V	–4	Halogen-Free TQFP	100	IND
LCMXO2-256HC-5TG100I	256	2.5 V / 3.3 V	–5	Halogen-Free TQFP	100	IND
LCMXO2-256HC-6TG100I	256	2.5 V / 3.3 V	–6	Halogen-Free TQFP	100	IND
LCMXO2-256HC-4MG132I	256	2.5 V / 3.3 V	–4	Halogen-Free csBGA	132	IND
LCMXO2-256HC-5MG132I	256	2.5 V / 3.3 V	–5	Halogen-Free csBGA	132	IND
LCMXO2-256HC-6MG132I	256	2.5 V / 3.3 V	–6	Halogen-Free csBGA	132	IND
LCMXO2-640HC-4SG48I	640	2.5 V / 3.3 V	–4	Halogen-Free QFN	48	IND
LCMXO2-640HC-5SG48I	640	2.5 V / 3.3 V	–5	Halogen-Free QFN	48	IND
LCMXO2-640HC-6SG48I	640	2.5 V / 3.3 V	–6	Halogen-Free QFN	48	IND
LCMXO2-640HC-4TG100I	640	2.5 V / 3.3 V	–4	Halogen-Free TQFP	100	IND
LCMXO2-640HC-5TG100I	640	2.5 V / 3.3 V	–5	Halogen-Free TQFP	100	IND
LCMXO2-640HC-6TG100I	640	2.5 V / 3.3 V	–6	Halogen-Free TQFP	100	IND
LCMXO2-640HC-4MG132I	640	2.5 V / 3.3 V	–4	Halogen-Free csBGA	132	IND
LCMXO2-640HC-5MG132I	640	2.5 V / 3.3 V	–5	Halogen-Free csBGA	132	IND
LCMXO2-640HC-6MG132I	640	2.5 V / 3.3 V	–6	Halogen-Free csBGA	132	IND
LCMXO2-640UHC-4TG144I	640	2.5 V / 3.3 V	–4	Halogen-Free TQFP	144	IND
LCMXO2-640UHC-5TG144I	640	2.5 V / 3.3 V	–5	Halogen-Free TQFP	144	IND
LCMXO2-640UHC-6TG144I	640	2.5 V / 3.3 V	–6	Halogen-Free TQFP	144	IND
LCMXO2-1200HC-4SG32I	1280	2.5 V / 3.3 V	–4	Halogen-Free QFN	32	IND
LCMXO2-1200HC-5SG32I	1280	2.5 V / 3.3 V	–5	Halogen-Free QFN	32	IND
LCMXO2-1200HC-6SG32I	1280	2.5 V / 3.3 V	–6	Halogen-Free QFN	32	IND
LCMXO2-1200HC-4TG100I	1280	2.5 V / 3.3 V	–4	Halogen-Free TQFP	100	IND
LCMXO2-1200HC-5TG100I	1280	2.5 V / 3.3 V	–5	Halogen-Free TQFP	100	IND
LCMXO2-1200HC-6TG100I	1280	2.5 V / 3.3 V	–6	Halogen-Free TQFP	100	IND
LCMXO2-1200HC-4MG132I	1280	2.5 V / 3.3 V	–4	Halogen-Free csBGA	132	IND
LCMXO2-1200HC-5MG132I	1280	2.5 V / 3.3 V	–5	Halogen-Free csBGA	132	IND
LCMXO2-1200HC-6MG132I	1280	2.5 V / 3.3 V	–6	Halogen-Free csBGA	132	IND
LCMXO2-1200HC-4TG144I	1280	2.5 V / 3.3 V	–4	Halogen-Free TQFP	144	IND
LCMXO2-1200HC-5TG144I	1280	2.5 V / 3.3 V	–5	Halogen-Free TQFP	144	IND
LCMXO2-1200HC-6TG144I	1280	2.5 V/ 3.3 V	–6	Halogen-Free TQFP	144	IND
LCMXO2-1200UHC-4FTG256I	1280	2.5 V / 3.3 V	–4	Halogen-Free ftBGA	256	IND
LCMXO2-1200UHC-5FTG256I	1280	2.5 V / 3.3 V	–5	Halogen-Free ftBGA	256	IND
LCMXO2-1200UHC-6FTG256I	1280	2.5 V / 3.3 V	–6	Halogen-Free ftBGA	256	IND
LCMXO2-2000HC-4TG100I	2112	2.5 V / 3.3 V	–4	Halogen-Free TQFP	100	IND

© 2026 Lattice Semiconductor Corp. All Lattice trademarks, registered trademarks, patents, and disclaimers are as listed at www.latticesemi.com/legal.
All other brand or product names are trademarks or registered trademarks of their respective holders. The specifications and information herein are subject to change without notice.

Downloaded from Arrow.com.

Part Number	LUTs	Supply Voltage	Speed	Package	Leads	Temp.
LCMXO2-2000HC-5TG100I	2112	2.5 V / 3.3 V	–5	Halogen-Free TQFP	100	IND
LCMXO2-2000HC-6TG100I	2112	2.5 V / 3.3 V	–6	Halogen-Free TQFP	100	IND
LCMXO2-2000HC-4MG132I	2112	2.5 V / 3.3 V	–4	Halogen-Free csBGA	132	IND
LCMXO2-2000HC-5MG132I	2112	2.5 V / 3.3 V	–5	Halogen-Free csBGA	132	IND
LCMXO2-2000HC-6MG132I	2112	2.5 V / 3.3 V	–6	Halogen-Free csBGA	132	IND
LCMXO2-2000HC-4TG144I	2112	2.5 V / 3.3 V	–4	Halogen-Free TQFP	144	IND
LCMXO2-2000HC-5TG144I	2112	2.5 V / 3.3 V	–5	Halogen-Free TQFP	144	IND
LCMXO2-2000HC-6TG144I	2112	2.5 V / 3.3 V	–6	Halogen-Free TQFP	144	IND
LCMXO2-2000HC-4BG256I	2112	2.5 V / 3.3 V	–4	Halogen-Free caBGA	256	IND
LCMXO2-2000HC-5BG256I	2112	2.5 V / 3.3 V	–5	Halogen-Free caBGA	256	IND
LCMXO2-2000HC-6BG256I	2112	2.5 V / 3.3 V	–6	Halogen-Free caBGA	256	IND
LCMXO2-2000HC-4FTG256I	2112	2.5 V / 3.3 V	–4	Halogen-Free ftBGA	256	IND
LCMXO2-2000HC-5FTG256I	2112	2.5 V / 3.3 V	–5	Halogen-Free ftBGA	256	IND
LCMXO2-2000HC-6FTG256I	2112	2.5 V / 3.3 V	–6	Halogen-Free ftBGA	256	IND
LCMXO2-2000UHC-4FG484I	2112	2.5 V / 3.3 V	–4	Halogen-Free fpBGA	484	IND
LCMXO2-2000UHC-5FG484I	2112	2.5 V / 3.3 V	–5	Halogen-Free fpBGA	484	IND
LCMXO2-2000UHC-6FG484I	2112	2.5 V / 3.3 V	–6	Halogen-Free fpBGA	484	IND
LCMXO2-4000HC-4QN84I	4320	2.5 V / 3.3 V	–4	Halogen-Free QFN	84	IND
LCMXO2-4000HC-5QN84I	4320	2.5 V / 3.3 V	–5	Halogen-Free QFN	84	IND
LCMXO2-4000HC-6QN84I	4320	2.5 V / 3.3 V	–6	Halogen-Free QFN	84	IND
LCMXO2-4000HC-4TG144I	4320	2.5 V / 3.3 V	–4	Halogen-Free TQFP	144	IND
LCMXO2-4000HC-5TG144I	4320	2.5 V / 3.3 V	–5	Halogen-Free TQFP	144	IND
LCMXO2-4000HC-6TG144I	4320	2.5 V / 3.3 V	–6	Halogen-Free TQFP	144	IND
LCMXO2-4000HC-4MG132I	4320	2.5 V / 3.3 V	–4	Halogen-Free csBGA	132	IND
LCMXO2-4000HC-5MG132I	4320	2.5 V / 3.3 V	–5	Halogen-Free csBGA	132	IND
LCMXO2-4000HC-6MG132I	4320	2.5 V / 3.3 V	–6	Halogen-Free csBGA	132	IND
LCMXO2-4000HC-4BG256I	4320	2.5 V / 3.3 V	–4	Halogen-Free caBGA	256	IND
LCMXO2-4000HC-5BG256I	4320	2.5 V / 3.3 V	–5	Halogen-Free caBGA	256	IND
LCMXO2-4000HC-6BG256I	4320	2.5 V / 3.3 V	–6	Halogen-Free caBGA	256	IND
LCMXO2-4000HC-4FTG256I	4320	2.5 V / 3.3 V	–4	Halogen-Free ftBGA	256	IND
LCMXO2-4000HC-5FTG256I	4320	2.5 V / 3.3 V	–5	Halogen-Free ftBGA	256	IND
LCMXO2-4000HC-6FTG256I	4320	2.5 V / 3.3 V	–6	Halogen-Free ftBGA	256	IND
LCMXO2-4000HC-4BG332I	4320	2.5 V / 3.3 V	–4	Halogen-Free caBGA	332	IND
LCMXO2-4000HC-5BG332I	4320	2.5 V / 3.3 V	–5	Halogen-Free caBGA	332	IND
LCMXO2-4000HC-6BG332I	4320	2.5 V / 3.3 V	–6	Halogen-Free caBGA	332	IND
LCMXO2-4000HC-4FG484I	4320	2.5 V / 3.3 V	–4	Halogen-Free fpBGA	484	IND
LCMXO2-4000HC-5FG484I	4320	2.5 V / 3.3 V	–5	Halogen-Free fpBGA	484	IND
LCMXO2-4000HC-6FG484I	4320	2.5 V / 3.3 V	–6	Halogen-Free fpBGA	484	IND
LCMXO2-7000HC-4TG144I	6864	2.5 V / 3.3 V	–4	Halogen-Free TQFP	144	IND
LCMXO2-7000HC-5TG144I	6864	2.5 V / 3.3 V	–5	Halogen-Free TQFP	144	IND
LCMXO2-7000HC-6TG144I	6864	2.5 V / 3.3 V	–6	Halogen-Free TQFP	144	IND
LCMXO2-7000HC-4BG256I	6864	2.5 V / 3.3 V	–4	Halogen-Free caBGA	256	IND
LCMXO2-7000HC-5BG256I	6864	2.5 V / 3.3 V	–5	Halogen-Free caBGA	256	IND
LCMXO2-7000HC-6BG256I	6864	2.5 V / 3.3 V	–6	Halogen-Free caBGA	256	IND
LCMXO2-7000HC-4FTG256I	6864	2.5 V / 3.3 V	–4	Halogen-Free ftBGA	256	IND
LCMXO2-7000HC-5FTG256I	6864	2.5 V / 3.3 V	–5	Halogen-Free ftBGA	256	IND

© 2026 Lattice Semiconductor Corp. All Lattice trademarks, registered trademarks, patents, and disclaimers are as listed at www.latticesemi.com/legal.
All other brand or product names are trademarks or registered trademarks of their respective holders. The specifications and information herein are subject to change without notice.

Downloaded from Arrow.com.

Part Number	LUTs	Supply Voltage	Speed	Package	Leads	Temp.
LCMXO2-7000HC-6FTG256I	6864	2.5 V / 3.3 V	–6	Halogen-Free ftBGA	256	IND
LCMXO2-7000HC-4BG332I	6864	2.5 V / 3.3 V	–4	Halogen-Free caBGA	332	IND
LCMXO2-7000HC-5BG332I	6864	2.5 V / 3.3 V	–5	Halogen-Free caBGA	332	IND
LCMXO2-7000HC-6BG332I	6864	2.5 V / 3.3 V	–6	Halogen-Free caBGA	332	IND
LCMXO2-7000HC-4FG484I	6864	2.5 V / 3.3 V	–4	Halogen-Free fpBGA	484	IND
LCMXO2-7000HC-5FG484I	6864	2.5 V / 3.3 V	–5	Halogen-Free fpBGA	484	IND
LCMXO2-7000HC-6FG484I	6864	2.5 V / 3.3 V	–6	Halogen-Free fpBGA	484	IND
LCMXO2-1200HC-4TG100IR[1]	1280	2.5 V / 3.3 V	–4	Halogen-Free TQFP	100	IND
LCMXO2-1200HC-5TG100IR[1]	1280	2.5 V / 3.3 V	–5	Halogen-Free TQFP	100	IND
LCMXO2-1200HC-6TG100IR[1]	1280	2.5 V / 3.3 V	–6	Halogen-Free TQFP	100	IND
LCMXO2-1200HC-4MG132IR[1]	1280	2.5 V / 3.3 V	–4	Halogen-Free csBGA	132	IND
LCMXO2-1200HC-5MG132IR[1]	1280	2.5 V / 3.3 V	–5	Halogen-Free csBGA	132	IND
LCMXO2-1200HC-6MG132IR[1]	1280	2.5 V / 3.3 V	–6	Halogen-Free csBGA	132	IND
LCMXO2-1200HC-4TG144IR[1]	1280	2.5 V / 3.3 V	–4	Halogen-Free TQFP	144	IND
LCMXO2-1200HC-5TG144IR[1]	1280	2.5 V / 3.3 V	–5	Halogen-Free TQFP	144	IND
LCMXO2-1200HC-6TG144IR[1]	1280	2.5 V / 3.3 V	–6	Halogen-Free TQFP	144	IND

Note:

1. Specifications for the “LCMXO2-1200HC-speed package IR1” are the same as the “LCMXO2-1200ZE-speed package I” devices respectively, except as specified in the R1 Device Specifications section of this data sheet.

5.2.6. High Performance Industrial Grade Devices Without Voltage Regulator, Halogen Free (RoHS) Packaging

Table 5.6. High Performance Industrial Grade Devices Without Voltage Regulator, Halogen Free (RoHS) Packaging

Part Number	LUTs	Supply Voltage	Speed	Package	Leads	Temp.
LCMXO2-2000HE-4TG100I	2112	1.2 V	–4	Halogen-Free TQFP	100	IND
LCMXO2-2000HE-5TG100I	2112	1.2 V	–5	Halogen-Free TQFP	100	IND
LCMXO2-2000HE-6TG100I	2112	1.2 V	–6	Halogen-Free TQFP	100	IND
LCMXO2-2000HE-4MG132I	2112	1.2 V	–4	Halogen-Free csBGA	132	IND
LCMXO2-2000HE-5MG132I	2112	1.2 V	–5	Halogen-Free csBGA	132	IND
LCMXO2-2000HE-6MG132I	2112	1.2 V	–6	Halogen-Free csBGA	132	IND
LCMXO2-2000HE-4TG144I	2112	1.2 V	–4	Halogen-Free TQFP	144	IND
LCMXO2-2000HE-5TG144I	2112	1.2 V	–5	Halogen-Free TQFP	144	IND
LCMXO2-2000HE-6TG144I	2112	1.2 V	–6	Halogen-Free TQFP	144	IND
LCMXO2-2000HE-4BG256I	2112	1.2 V	–4	Halogen-Free caBGA	256	IND
LCMXO2-2000HE-5BG256I	2112	1.2 V	–5	Halogen-Free caBGA	256	IND
LCMXO2-2000HE-6BG256I	2112	1.2 V	–6	Halogen-Free caBGA	256	IND
LCMXO2-2000HE-4FTG256I	2112	1.2 V	–4	Halogen-Free ftBGA	256	IND
LCMXO2-2000HE-5FTG256I	2112	1.2 V	–5	Halogen-Free ftBGA	256	IND
LCMXO2-2000HE-6FTG256I	2112	1.2 V	–6	Halogen-Free ftBGA	256	IND
LCMXO2-2000UHE-4FG484I	2112	1.2 V	–4	Halogen-Free fpBGA	484	IND
LCMXO2-2000UHE-5FG484I	2112	1.2 V	–5	Halogen-Free fpBGA	484	IND
LCMXO2-2000UHE-6FG484I	2112	1.2 V	–6	Halogen-Free fpBGA	484	IND
LCMXO2-4000HE-4MG132I	4320	1.2 V	–4	Halogen-Free csBGA	132	IND
LCMXO2-4000HE-5MG132I	4320	1.2 V	–5	Halogen-Free csBGA	132	IND
LCMXO2-4000HE-6MG132I	4320	1.2 V	–6	Halogen-Free csBGA	132	IND
LCMXO2-4000HE-4TG144I	4320	1.2 V	–4	Halogen-Free TQFP	144	IND

© 2026 Lattice Semiconductor Corp. All Lattice trademarks, registered trademarks, patents, and disclaimers are as listed at www.latticesemi.com/legal.
All other brand or product names are trademarks or registered trademarks of their respective holders. The specifications and information herein are subject to change without notice.

Downloaded from Arrow.com.

Part Number	LUTs	Supply Voltage	Speed	Package	Leads	Temp.
LCMXO2-4000HE-5TG144I	4320	1.2 V	–5	Halogen-Free TQFP	144	IND
LCMXO2-4000HE-6TG144I	4320	1.2 V	–6	Halogen-Free TQFP	144	IND
LCMXO2-4000HE-4MG184I	4320	1.2 V	–4	Halogen-Free csBGA	184	IND
LCMXO2-4000HE-5MG184I	4320	1.2 V	–5	Halogen-Free csBGA	184	IND
LCMXO2-4000HE-6MG184I	4320	1.2 V	–6	Halogen-Free csBGA	184	IND
LCMXO2-4000HE-4BG256I	4320	1.2 V	–4	Halogen-Free caBGA	256	IND
LCMXO2-4000HE-5BG256I	4320	1.2 V	–5	Halogen-Free caBGA	256	IND
LCMXO2-4000HE-6BG256I	4320	1.2 V	–6	Halogen-Free caBGA	256	IND
LCMXO2-4000HE-4FTG256I	4320	1.2 V	–4	Halogen-Free ftBGA	256	IND
LCMXO2-4000HE-5FTG256I	4320	1.2 V	–5	Halogen-Free ftBGA	256	IND
LCMXO2-4000HE-6FTG256I	4320	1.2 V	–6	Halogen-Free ftBGA	256	IND
LCMXO2-4000HE-4BG332I	4320	1.2 V	–4	Halogen-Free caBGA	332	IND
LCMXO2-4000HE-5BG332I	4320	1.2 V	–5	Halogen-Free caBGA	332	IND
LCMXO2-4000HE-6BG332I	4320	1.2 V	–6	Halogen-Free caBGA	332	IND
LCMXO2-4000HE-4FG484I	4320	1.2 V	–4	Halogen-Free fpBGA	484	IND
LCMXO2-4000HE-5FG484I	4320	1.2 V	–5	Halogen-Free fpBGA	484	IND
LCMXO2-4000HE-6FG484I	4320	1.2 V	–6	Halogen-Free fpBGA	484	IND
LCMXO2-7000HE-4TG144I	6864	1.2 V	–4	Halogen-Free TQFP	144	IND
LCMXO2-7000HE-5TG144I	6864	1.2 V	–5	Halogen-Free TQFP	144	IND
LCMXO2-7000HE-6TG144I	6864	1.2 V	–6	Halogen-Free TQFP	144	IND
LCMXO2-7000HE-4BG256I	6864	1.2 V	–4	Halogen-Free caBGA	256	IND
LCMXO2-7000HE-5BG256I	6864	1.2 V	–5	Halogen-Free caBGA	256	IND
LCMXO2-7000HE-6BG256I	6864	1.2 V	–6	Halogen-Free caBGA	256	IND
LCMXO2-7000HE-4FTG256I	6864	1.2 V	–4	Halogen-Free ftBGA	256	IND
LCMXO2-7000HE-5FTG256I	6864	1.2 V	–5	Halogen-Free ftBGA	256	IND
LCMXO2-7000HE-6FTG256I	6864	1.2 V	–6	Halogen-Free ftBGA	256	IND
LCMXO2-7000HE-4BG332I	6864	1.2 V	–4	Halogen-Free caBGA	332	IND
LCMXO2-7000HE-5BG332I	6864	1.2 V	–5	Halogen-Free caBGA	332	IND
LCMXO2-7000HE-6BG332I	6864	1.2 V	–6	Halogen-Free caBGA	332	IND
LCMXO2-7000HE-4FG484I	6864	1.2 V	–4	Halogen-Free fpBGA	484	IND
LCMXO2-7000HE-5FG484I	6864	1.2 V	–5	Halogen-Free fpBGA	484	IND
LCMXO2-7000HE-6FG484I	6864	1.2 V	–6	Halogen-Free fpBGA	484	IND

5.2.7. High Performance Automotive Grade Devices Halogen Free (RoHS) Packaging

Table 5.7. High Performance Automotive Grade Devices Halogen Free (RoHS) Packaging

Part Number	LUTs	Supply Voltage	Speed	Package	Leads	Temp.
LAMXO2-256HC-5TG100E	256	2.5 V/3.3 V	–5	Halogen Free TQFP	100	AUTO
LAMXO2-256HC-5MG132E	256	2.5 V/3.3 V	–5	Halogen Free csBGA	132	AUTO
LAMXO2-640HC-5TG100E	640	2.5 V/3.3 V	–5	Halogen Free TQFP	100	AUTO
LAMXO2-640HC-5MG132E	640	2.5 V/3.3 V	–5	Halogen Free csBGA	132	AUTO

© 2026 Lattice Semiconductor Corp. All Lattice trademarks, registered trademarks, patents, and disclaimers are as listed at www.latticesemi.com/legal.
All other brand or product names are trademarks or registered trademarks of their respective holders. The specifications and information herein are subject to change without notice.

Downloaded from Arrow.com.

5.3. R1 Device Specifications

The LCMXO2-1200ZE/HC "R1" devices have the same specifications as their Standard (non-R1) counterparts except as listed below. For more details on the R1 to Standard migration refer to Designing for Migration from MachXO2-1200-R1 to Standard Non-R1) Devices (FPGA-AN-02012).

- The User Flash Memory (UFM) cannot be programmed through the internal WISHBONE interface. It can still be programmed through the JTAG/SPI/I2C ports.
- The on-chip differential input termination resistor value is higher than intended. It is approximately 200 Ω as opposed to the intended 100 Ω. It is recommended to use external termination resistors for differential inputs. The on-chip termination resistors can be disabled through Lattice design software.
- Soft Error Detection logic may not produce the correct result when it is run for the first time after configuration. To use this feature, discard the result from the first operation. Subsequent operations produce the correct result.
- Under certain conditions, IIH exceeds data sheet specifications. The following table provides more details:

Table 5.8. R1 Device Specifications

Condition	Clamp	Pad Rising IIH Max.	Pad Falling IIH Min.	Steady State Pad High IIH	Steady State Pad Low IIL
VPAD > VCCIO	OFF	1 mA	–1 mA	1 mA	10 µA
VPAD = VCCIO	ON	10 µA	–10 µA	10 µA	10 µA
VPAD = VCCIO	OFF	1 mA	–1 mA	1 mA	10 µA
VPAD < VCCIO	OFF	10 µA	–10 µA	10 µA	10 µA

- The user SPI interface does not operate correctly in some situations. During master read access and slave write access, the last byte received does not generate the RRDY interrupt.
- In GDDRX2, GDDRX4 and GDDR71 modes, ECLKSYNC may have a glitch in the output under certain conditions, leading to possible loss of synchronization.
- When using the hard I2C IP core, the I2C status registers I2C_1_SR and I2C_2_SR may not update correctly.
- PLL Lock signal glitches high when coming out of standby. This glitch lasts for about 10 µsec before returning low.
- Dual boot only available on HC devices, requires tying VCC and VCCIO2 to the same 3.3 V or 2.5 V supply.

© 2026 Lattice Semiconductor Corp. All Lattice trademarks, registered trademarks, patents, and disclaimers are as listed at www.latticesemi.com/legal.
All other brand or product names are trademarks or registered trademarks of their respective holders. The specifications and information herein are subject to change without notice.

Downloaded from Arrow.com.

6. Supplemental Information

A variety of technical notes for the MachXO2 family are available on the Lattice website.

- Power Estimation and Management for MachXO2 Devices (FPGA-TN-2161)
- MachXO2 sysCLOCK PLL Design and User Guide (FPGA-TN-02157)
- Memory Usage Guide for MachXO2 Devices (FPGA-TN-02159)
- MachXO2 sysI/O User Guide (FPGA-TN-02158)
- Implementing High-Speed Interfaces with MachXO2 Devices (FPGA-TN-02153)
- MachXO2 Programming and Configuration User Guide (FPGA-TN-02155)
- Using User Flash Memory and Hardened Control Functions in MachXO2 Devices (FPGA-TN-02162)
- MachXO2 SED Usage Guide (FPGA-TN-02156)
- Using TraceID (FPGA-TN-02084)
- PCB Layout Recommendations for BGA Packages (FPGA-TN-02024)
- Minimizing System Interruption During Configuration Using TransFR Technology (FPGA-TN-02198)
- MIPI D-PHY Bandwidth Matrix and Implementation (FPGA-TN-02090)
- Designing for Migration from MachXO2-1200-R1 to Standard (non-R1) Devices (FPGA-AN-02012)
- Boundary Scan Testability with Lattice sysIO Capability (AN8066)
- MachXO2 Device Pinout Files
- Thermal Management (FPGA-TN-02044)
- Lattice FPGA Design Software

Below are some useful links related to the MachXO2 family devices.

- MachXO2 Family Web Page
- Boards, Demos, IP Cores and Reference Designs for MachXO2 Family Devices
- Lattice Insights for Training Series and Learning Plans

For further information on interface standards, refer to the following web sites.

- JEDEC Standards (LVTTL, LVCMOS, LVDS, DDR, DDR2, LPDDR): www.jedec.org
- PCI: www.pcisig.com

© 2026 Lattice Semiconductor Corp. All Lattice trademarks, registered trademarks, patents, and disclaimers are as listed at www.latticesemi.com/legal.
All other brand or product names are trademarks or registered trademarks of their respective holders. The specifications and information herein are subject to change without notice.

Downloaded from Arrow.com.

Technical Support Assistance

Submit a technical support case through www.latticesemi.com/techsupport.

For frequently asked questions, please refer to the Lattice Answer Database at www.latticesemi.com/Support/AnswerDatabase.

© 2026 Lattice Semiconductor Corp. All Lattice trademarks, registered trademarks, patents, and disclaimers are as listed at www.latticesemi.com/legal.
All other brand or product names are trademarks or registered trademarks of their respective holders. The specifications and information herein are subject to change without notice.

Downloaded from Arrow.com.

Revision History

Revision 4.7, July 2025

Section	Change Summary
Introduction	Removed the original Note 8, *48-pin QFN information is 'Advanced'*, from Table 1.1. MachXO2 Family Selection Guide.
DC and Switching Characteristics	• Table 3.6. Hot Socketing Specifications1, 2, 3, 4: added Note 4. • Changed all devices starting from LCM to Mach in Table 3.8. Static Supply Current – ZE Devices1, 2, 3, 6, Table 3.10. Static Supply Current – HC/HE Devices1, 2, 3, 6, Table 3.11. Programming and Erase Flash Supply Current – HC/HE Devices1, 2, 3, 4, Table 3.12. Programming and Erase Flash Supply Current – ZE Devices1, 2, 3, 4, Table 3.31. MachXO2 Standby Mode Timing – HC/HE Devices, Table 3.32. MachXO2 Standby Mode Timing – ZE Devices, Table 3.33. Flash Download Time, and Table 3.35. sysCONFIG Port Timing Specifications. • Table 3.14. sysI/O Single-Ended DC Electrical Characteristics1, 2: changed with a duration of <10 ns to with a duration of < 20ns in Note 3. • Added –5 to Parameter for Commercial/Industrial in Table 3.30. MachXO2 Oscillator Output Frequency1. • Newly added The worst case can be up to 1.75 times the Typ value as note content to Table 3.33. Flash Download Time in the Flash Download Time section.
Pinout Information	Removed the original Note 3, *48-pin QFN information is 'Advanced'*, from Table 4.2. MachXO2-256/MachXO2-640/MachXO2-640U Pin Summary.
Ordering Information	Removed the original Note *48-pin QFN information is 'Advanced'* from Figure 5.1. MachXO2 Part Number Description.

Revision 4.6, March 2025

Section	Change Summary
DC and Switching Characteristics	Added the Comparator Function section.

Revision 4.5, October 2024

Section	Change Summary
DC and Switching Characteristics	• Added caption for Figure 3.13. Standby Mode Timing WaveForms. • Updated Table 3.4. Power-On Reset Voltage Levels to change table name and add columns for Automotive. • Updated Table 3.5. Programming/Erase Specifications to add Commercial/Industrial to the column name and added Automotive columns. • Updated Table 3.7. DC Electrical Characteristics to add Commercial/Industrial to the column name, corrected IPU Commercial/Industrial values, and added Automotive columns. • Updated Table 3.14. sysI/O Single-Ended DC Electrical Characteristics1, 2 to add footnote and reference to footnote 5 in VIL max value of LVCMOS 3.3/LVTTL, LVCMOS 2.5, and LVCMOS 1.8. • Added caption for Table 3.15. Mixed Voltage LVCMOS Input Standards when VCCIO = 1.5 V. • Updated Table 3.16. LVDS to add Commercial/Industrial to the description and added Automotive rows for VINP, VINM, and VOS. • Updated Table 3.27. MachXO2 External Switching Characteristics – HC/HE Devices1, 2, 3, 4, 5, 6, 7 to add Commercial/Industrial to the speed grades column name and added –5 speed grade column. • Updated Table 3.29. sysCLOCK PLL Timing to add Commercial/Industrial to the column name and added Automotive columns. • Updated Table 3.30. MachXO2 Oscillator Output Frequency1 to add

© 2026 Lattice Semiconductor Corp. All Lattice trademarks, registered trademarks, patents, and disclaimers are as listed at www.latticesemi.com/legal.
All other brand or product names are trademarks or registered trademarks of their respective holders. The specifications and information herein are subject to change without notice.

Downloaded from Arrow.com.

Section	Change Summary
	Commercial/Industrial to the column name, added Oscillator Output (Automotive) row for fMAX, and added Automotive columns. • Updated Table 3.34. JTAG Port Timing Specifications and Table 3.35. sysCONFIG Port Timing Specifications to add Commercial/Industrial to the column name and added Automotive columns.

Revision 4.4, September 2024

Section	Change Summary
Ordering Information	• Removed the following packages from the High-Performance Commercial Grade Devices with Voltage Regulator, Halogen Free (RoHS) Packaging section: • LCMXO2-7000HC-4FG400C • LCMXO2-7000HC-5FG400C • LCMXO2-7000HC-6FG400C • Removed the following packages from the High-Performance Industrial Grade Devices with Voltage Regulator, Halogen Free (RoHS) Packaging section: • LCMXO2-7000HC-4FG400I • LCMXO2-7000HC-5FG400I • LCMXO2-7000HC-6FG400I

Revision 4.3, November 2023

Section	Change Summary
Pinout Information	Updated Table 4.5. MachXO2-4000 Pin Summary. Updated the values of the 81 WLCSP for the following: • General Purpose I/O per Bank: • Bank 0 – changed to 30 • Total General Purpose Single Ended I/O – changed to 64 • Differential I/O Bank • Bank 0 – changed to 15 • Total General Purpose Differential I/O – changed to 31

Revision 4.2, October 2023

Section	Change Summary
Disclaimers	Updated this section.
Introduction	• Newly added the Application section. • Table 1.1. MachXO2 Family Selection Guide: • newly added the *Automotive Qualified* feature row and pointed out MachXO2-256 and MachXO2-640 devices are automotive qualified; • added Note 10, Package is available for automotive devices; • attached Note 10 to the *100-pin TQFP* and *132-ball csBGA* packages of MachXO2-256 and MachXO2-640 devices.
DC and Switching Characteristics	• In Table 3.2. Recommended Operating Conditions1, newly added the symbol t_{JAUTO} for Junction Temperature Automotive Operation and provided its corresponding values. • Updated Table 3.3. Power Supply Ramp Rates1 to include the $t_{RAMP\ IND/COM}$ and $t_{RAMP\ AUTO}$ symbols and their corresponding Parameter and values. • In Note 1 of Table 3.23. Register-to-Register Performance1, Table 3.27. MachXO2 External Switching Characteristics – HC/HE Devices1, [2, 3, 4, 5, 6, 7], and Table 3.28. MachXO2 External Switching Characteristics – ZE Devices1, [2, 3, 4, 5, 6, 7], updated that other operating conditions, including industrial and *automotive*, can be extracted from the Diamond software.

© 2026 Lattice Semiconductor Corp. All Lattice trademarks, registered trademarks, patents, and disclaimers are as listed at www.latticesemi.com/legal.
All other brand or product names are trademarks or registered trademarks of their respective holders. The specifications and information herein are subject to change without notice.

Downloaded from Arrow.com.

Section	Change Summary
Ordering Information	• Figure 5.1. MachXO2 Part Number Description: • added *LAMXO2* in Device Family for automotive devices; • added *E = Automotive* in Grade. • Added new top-side marking figure for MachXO2 devices of Automotive grade. • Reorganized this section and changed the numbering of the following sub-sections: • changed previous *5.3. Ultra Low Power Industrial Grade Devices, Halogen Free (RoHS) Packaging* to 5.2.4 Ultra Low Power Industrial Grade Devices, Halogen Free (RoHS) Packaging; • changed previous *5.3.1. High-Performance Industrial Grade Devices with Voltage Regulator, Halogen Free (RoHS) Packaging* to 5.2.5 High-Performance Industrial Grade Devices with Voltage Regulator, Halogen Free (RoHS) Packaging; • changed previous *5.4. High Performance Industrial Grade Devices Without Voltage Regulator, Halogen Free (RoHS) Packaging* to 5.2.6 High Performance Industrial Grade Devices Without Voltage Regulator, Halogen Free (RoHS) Packaging. • Newly added the High Performance Automotive Grade Devices Halogen Free (RoHS) Packaging section to include LAMXO2-256HC-5TG100E, LAMXO2-256HC-5MG132E, LAMXO2-640HC-5TG100E, and LAMXO2-640HC-5MG132E OPNs. • Changed the header *Grade* to *Speed* in the following tables: • Table 5.1. Ultra Low Power Commercial Grade Devices, Halogen Free (RoHS) Packaging; • Table 5.2. High-Performance Commercial Grade Devices with Voltage Regulator, Halogen Free (RoHS) Packaging; • Table 5.3. High-Performance Commercial Grade Devices without Voltage Regulator, Halogen Free (RoHS) Packaging; • Table 5.4. Ultra Low Power Industrial Grade Devices, Halogen Free (RoHS) Packaging; • Table 5.5. High-Performance Industrial Grade Devices with Voltage Regulator, Halogen Free (RoHS) Packaging; • Table 5.6. High Performance Industrial Grade Devices Without Voltage Regulator, Halogen Free (RoHS) Packaging; • Table 5.7. High Performance Automotive Grade Devices Halogen Free (RoHS) Packaging.
Supplemental Information	Newly added the links to MachXO2 Family Web Page, Boards, Demos, IP Cores and Reference Designs for MachXO2 Family Devices, and Lattice Insights for Training Series and Learning Plans.

Revision 4.1, March 2023

Section	Change Summary
Introduction	In Table 1.1. MachXO2 Family Selection Guide, changed the I/O number of the 144-pin TQFP to *115* for both MachXO2-4000 and MachXO2-7000 devices.
Pinout Information	• In Table 4.5. MachXO2-4000 Pin Summary: • changed the General Purpose I/O number in Bank 0 to *28* for the 144-pin TQFP; • changed the total number of General Purpose Single Ended I/O to *115* for the 144-pin TQFP. • In Table 4.6. MachXO2-7000 Pin Summary: • changed the General Purpose I/O number in Bank 0 to *28* for the 144-pin TQFP; • changed the total number of General Purpose Single Ended I/O to *115* for the 144-pin TQFP. • In the For Further Information section, removed the standalone download path of the Power Calculator.

© 2026 Lattice Semiconductor Corp. All Lattice trademarks, registered trademarks, patents, and disclaimers are as listed at www.latticesemi.com/legal.
All other brand or product names are trademarks or registered trademarks of their respective holders. The specifications and information herein are subject to change without notice.

Downloaded from Arrow.com.

Revision 4.0, February 2023

Section	Change Summary
DC and Switching Characteristics	Corrected typo in Table 3.1. Absolute Maximum Ratings. Changed *Dedicated Input Voltage Applied* to *–0.5 V to 3.75 V*.
Technical Support Assistance	Added reference to the Lattice Answer Database on the Lattice website.
All	Updated single table footnote style.

Revision 3.9, February 2022

Section	Change Summary
DC and Switching Characteristics	Corrected typo in Table 3.1. Absolute Maximum Ratings. Changed Storage Temperature (Ambient) to *–55 °C to 125 °C*.
Supplemental Information	Updated linked documents in this section (and across the document if they are referenced.)

Revision 3.8, October 2021

Section	Change Summary
DC and Switching Characteristics	Added footnote 6 to Table 3.4. Power Supply Ramp Rates.

Revision 3.7, June 2021

Section	Change Summary
Acronyms in This Document	Added items.
Architecture	• Added a graphical MUX symbol in Figure 2.16. Input Gearbox. • Changed *pull-up* to *pull-down* in the power-up sequence described in the Power-On-Reset section.
DC and Switching Characteristics	• Removed footnote indicators from Absolute Maximum Ratings heading. • Added V_{REF} (V) values for SSTL18D, SSTL25D, and HSTL18D in Table 3.13. sysI/O Recommended Operating Conditions.
—	Corrected superscript formatting in Table 1.1, Table 2.13, Table 3.10, Table 3.14, and Table 3.26.

Revision 3.6, December 2020

Section	Change Summary
All	Updated document template.
Introduction	Added 36-ball WLCSP and 81-ball WLCSP to Table 1.1. MachXO2 Family Selection Guide.
Pinout Information	• Added 36-WLCSP to Table 4.3. MachXO2-1200/MachXO2-1200U Pin Summary. • Updated Table 4.5. MachXO2-4000 Pin Summary. Added 81-WLCSP and adjusted values of 84 QFN packages.
Ordering Information	• Added 36-ball WLCSP and 81-ball WLCSP to Figure 5.1. MachXO2 Part Number Description. • Added part numbers: LCMXO2-1200ZE-1UWG36ITR , LCMXO2-1200ZE-1UWG36ITR1K, LCMXO2-4000ZE-1UWG81ITR, and LCMXO2-4000ZE-1UWG81ITR1K.
All	Updated document numbers of referenced technical notes.

Revision 3.5, October 2020

Section	Change Summary
DC and Switching Characteristics	Revised footnote 2 in the Static Supply Current – ZE Devices and Static Supply Current – HC/HE Devices tables.

© 2026 Lattice Semiconductor Corp. All Lattice trademarks, registered trademarks, patents, and disclaimers are as listed at www.latticesemi.com/legal.
All other brand or product names are trademarks or registered trademarks of their respective holders. The specifications and information herein are subject to change without notice.

Downloaded from Arrow.com.

Revision 3.4, June 2019

Section	Change Summary
All	• Changed document number from DS1035 to FPGA-DS-02056. • Added Disclaimers section. • Minor editorial and style changes.
Introduction	Added MIPI D-PHY Emulated to Features section.
Architecture	• Added MIPI D-PHY Bandwidth Matrix and Implementation reference to Table 2.12 footnote 3. • Added power-up sequence to the Power-On-Reset section.
DC and Switching Characteristics	• Removed C2 row from the DC Electrical Characteristics table. • Removed footnote 11 from MachXO2 External Switching Characteristics – HC/HE Devices and the MachXO2 External Switching Characteristics – ZE Devices tables.
Supplemental Information	Added MIPI D-PHY Bandwidth Matrix and Implementation reference.

Revision 3.3, March 2017

Section	Change Summary
DC and Switching Characteristics	• Updated the Absolute Maximum Ratings section. Added standards. • Updated the sysI/O Recommended Operating Conditions section. Added standards. • Updated the sysI/O Single-Ended DC Electrical Characteristics section. Added standards. • Updated the MachXO2 External Switching Characteristics – HC/HE Devices section. • Under 7:1 LVDS Outputs – GDDR71_TX.ECLK.7:1, the D_{VB} and the D_{VA} parameters were changed to D_{IB} and D_{IA}. The parameter descriptions were also modified. • Updated the MachXO2 External Switching Characteristics – ZE Devices section. • Under 7:1 LVDS Outputs – GDDR71_TX.ECLK.7:1, the D_{VB} and the D_{VA} parameters were changed to D_{IB} and D_{IA}. The parameter descriptions were also modified. • Updated the sysCONFIG Port Timing Specifications section. • Corrected the t_{INITL} units from ns to µs.
Pinout Information	• Updated the Signal Descriptions section. Revised the descriptions of the PROGRAMN, INITN, and DONE signals. • Updated the Pinout Information Summary section. Added footnote to MachXO2-1200 32 QFN.
Ordering Information	• Updated the MachXO2 Part Number Description section. Corrected the MG184, BG256, FTG256 package information. Added “(0.8 mm Pitch)” to BG332. • Updated the Ultra Low Power Industrial Grade Devices, Halogen Free (RoHS) Packaging section. • Updated LCMXO2-1200ZE-1UWG25ITR50 footnote. • Corrected footnote numbering typo. • Added the LCMXO2-2000ZE-1UWG49ITR50 and LCMXO2-2000ZE-1UWG49ITR1K part numbers. Updated/added footnote/s.

Revision 3.2, May 2016

Section	Change Summary
All	• Updated the MachXO2 External Switching Characteristics – HC/HE Devices section. Added footnote 12. • Updated the MachXO2 External Switching Characteristics – ZE Devices section. Added footnote 12.
Introduction	• Updated the Features section. Revised Table 1.1. MachXO2 Family Selection Guide. • Added ‘Advanced’ 48 QFN package. • Revised footnote 6. • Added footnote 9.

© 2026 Lattice Semiconductor Corp. All Lattice trademarks, registered trademarks, patents, and disclaimers are as listed at www.latticesemi.com/legal.
All other brand or product names are trademarks or registered trademarks of their respective holders. The specifications and information herein are subject to change without notice.

Downloaded from Arrow.com.

Section	Change Summary
DC and Switching Characteristics	• Updated the MachXO2 External Switching Characteristics – HC/HE Devices section. Added footnote 12. • Updated the MachXO2 External Switching Characteristics – ZE Devices section. Added footnote 12.
Pinout Information	• Updated the Signal Descriptions section. Added information on GND signal. • Updated the Pinout Information Summary section. • Added 'Advanced' MachXO2-256 48 QFN values. • Added 'Advanced' MachXO2-640 48 QFN values. • Added footnote to GND. • Added footnotes 2 and 3.
Ordering Information	• Updated the MachXO2 Part Number Description section. Added 'Advanced' SG48 package and revised footnote. • Updated the Ordering Information section. Added part numbers for 'Advanced' QFN 48 package.

Revision 3.1, March 2016

Section	Change Summary
Introduction	• Updated the Features section. Revised Table 1.1, MachXO2 Family Selection Guide. • Added 32 QFN value for XO2-1200. • Added 84 QFN (7 mm x 7 mm, 0.5 mm) package. • Modified package name to 100-pin TQFP. • Modified package name to 144-pin TQFP. • Added footnote.
Architecture	Updated the Typical I/O Behavior During Power-up section. Removed reference to TN1202.
DC and Switching Characteristics	Updated the sysCONFIG Port Timing Specifications section. Revised $t_{DPPDONE}$ and $t_{DPPINIT}$ Max. values per PCN 03A-16, released March 2016.
Pinout Information	• Updated the Pinout Information Summary section. • Added MachXO2-1200 32 QFN values. • Added 'Advanced' MachXO2-4000 84 QFN values.
Ordering Information	• Updated the MachXO2 Part Number Description section. Added 'Advanced' QN84 package and footnote. • Updated the Ordering Information section. • Added part numbers for 1280 LUTs QFN 32 package. • Added part numbers for 4320 LUTs QFN 84 package.

Revision 3.0, March 2015

Section	Change Summary
Introduction	• Updated the Features section. Revised Table 1.1. MachXO2 Family Selection Guide. • Changed 64-ball ucBGA dimension.
Architecture	Updated the Device Configuration section. Added JTAGENB to TAP dual purpose pins.

Revision 2.9, December 2014

Section	Change Summary
Introduction	• Updated the Features section. Revised Table 1.1, MachXO2 Family Selection Guide. • Removed XO2-4000U data. • Removed 400-ball ftBGA. • Removed 25-ball WLCSP value for XO2-2000U.

© 2026 Lattice Semiconductor Corp. All Lattice trademarks, registered trademarks, patents, and disclaimers are as listed at www.latticesemi.com/legal.
All other brand or product names are trademarks or registered trademarks of their respective holders. The specifications and information herein are subject to change without notice.

Downloaded from Arrow.com.

Section	Change Summary
DC and Switching Characteristics	• Updated the Recommended Operating Conditions section. Adjusted Max. values for V_{CC} and V_{CCIO}. • Updated the sysI/O Recommended Operating Conditions section. Adjusted Max. values for LVCMOS 3.3, LVTTL, PCI, LVDS33 and LVPECL.
Pinout Information	Updated the Pinout Information Summary section. Removed MachXO2-4000U.
Ordering Information	• Updated the MachXO2 Part Number Description section. Removed BG400 package. • Updated the High-Performance Commercial Grade Devices with Voltage Regulator, Halogen Free (RoHS) Packaging section. Removed LCMXO2-4000UHC part numbers. • Updated the High-Performance Industrial Grade Devices with Voltage Regulator, Halogen Free (RoHS) Packaging section. Removed LCMXO2-4000UHC part numbers.

Revision 2.8, November 2014

Section	Change Summary
Introduction	• Updated the Features section. • Revised I/O under Flexible Logic Architecture. • Revised standby power under Ultra Low Power Devices. • Revise input frequency range under Flexible On-Chip Clocking. • Updated Table 1.1, MachXO2 Family Selection Guide. • Added XO2-4000U data. • Removed HE and ZE device options for XO2-4000. • Added 400-ball ftBGA.
Pinout Information	Updated the Pinout Information Summary section. Added MachXO2-4000U caBGA400 and MachXO2-7000 caBGA400.
Ordering Information	• Updated the MachXO2 Part Number Description section. Added BG400 package. • Updated the Ordering Information section. Added MachXO2-4000U caBGA400 and MachXO2-7000 caBGA400 part numbers.

Revision 2.7, October 2014

Section	Change Summary
Ordering Information	Updated the Ultra Low Power Industrial Grade Devices, Halogen Free (RoHS) Packaging section. Fixed typo in LCMXO2-2000ZE-1UWG49ITR part number package.
Architecture	Updated the Supported Standards section. Added MIPI information to Table 2.12. Supported Input Standards and Table 2.13. Supported Output Standards.
DC and Switching Characteristics	• Updated the BLVDS section. Changed output impedance nominal values in Table 3.3, BLVDS DC Condition. • Updated the LVPECL section. Changed output impedance nominal value in Table 3.4, LVPECL DC Condition. • Updated the sysCONFIG Port Timing Specifications section. Updated INITN low time values.

Revision 2.6, July 2014

Section	Change Summary
DC and Switching Characteristics	• Updated sysI/O Single-Ended DC Electrical Characteristics section. Updated footnote 4. • Updated Register-to-Register Performance section. Updated footnote.
Ordering Information	• Updated UW49 package to UWG49 in MachXO2 Part Number Description. • Updated LCMXO2-2000ZE-1UWG49CTR package in Ultra Low Power Commercial Grade Devices, Halogen Free (RoHS) Packaging.

© 2026 Lattice Semiconductor Corp. All Lattice trademarks, registered trademarks, patents, and disclaimers are as listed at www.latticesemi.com/legal.
All other brand or product names are trademarks or registered trademarks of their respective holders. The specifications and information herein are subject to change without notice.

Downloaded from Arrow.com.

Revision 2.5, May 2014

Section	Change Summary
Architecture	Updated TransFR (Transparent Field Reconfiguration) section. Updated TransFR description for PLL use during background Flash programming.

Revision 2.4, February 2014

Section	Change Summary
Introduction	Included the 49 WLCSP package in the MachXO2 Family Selection Guide table.
Architecture	Added information to Standby Mode and Power Saving Options section.
Pinout Information	Added the XO2-2000 49 WLCSP in the Pinout Information Summary table.
Ordering Information	• Added UW49 package in MachXO2 Part Number Description. • Added and LCMXO2-2000ZE-1UWG49CTR in Ultra Low Power Commercial Grade Devices, Halogen Free (RoHS) Packaging section. • Added and LCMXO2-2000ZE-1UWG49ITR in Ultra Low Power Industrial Grade Devices, Halogen Free (RoHS) Packaging section.

Revision 2.3, December 2013

Section	Change Summary
Architecture	Updated information on CLKOS output divider in sysCLOCK Phase Locked Loops (PLLs) section.
DC and Switching Characteristics	• Updated Static Supply Current – ZE Devices table. • Updated footnote 4 in sysI/O Single-Ended DC Electrical Characteristics table; Updated VIL Max. (V) data for LVCMOS 25 and LVCMOS 28. • Updated VOS test condition in sysI/O Differential Electrical Characteristics - LVDS table.

Revision 2.2, September 2013

Section	Change Summary
Architecture	• Removed I2C Clock-Stretching feature per PCN #10A-13. • Removed information on PDPR memory in RAM Mode section. • Updated Supported Input Standards table.
DC and Switching Characteristics	Updated Power-On-Reset Voltage Levels table.

Revision 2.1, June 2013

Section	Change Summary
Architecture	• Architecture Overview – Added information on the state of the register on power-up and after configuration. • sysCLOCK Phase Locked Loops (PLLs) section – Added missing cross reference to sysCLOCK PLL Timing table.
DC and Switching Characteristics	• Added slew rate information to footnote 2 of the MachXO2 External Switching Characteristics – HC/HE Devices and the MachXO2 External Switching Characteristics – ZE Devices tables. • Power-On-Reset Voltage Levels table – Added symbols.

Revision 2.0, January 2013

Section	Change Summary
Introduction	Updated the total number I/O to include JTAGENB.
Architecture	• Supported Output Standards table – Added 3.3 VCCIO (Typ.) to LVDS row. • Changed SRAM CRC Error Detection to Soft Error Detection.

© 2026 Lattice Semiconductor Corp. All Lattice trademarks, registered trademarks, patents, and disclaimers are as listed at www.latticesemi.com/legal.
All other brand or product names are trademarks or registered trademarks of their respective holders. The specifications and information herein are subject to change without notice.

Downloaded from Arrow.com.

Section	Change Summary
DC and Switching Characteristics	• Power Supply Ramp Rates table – Updated Units column for tRAMP symbol. • Added new Maximum sysI/O Buffer Performance table. • sysCLOCK PLL Timing table – Updated Min. column values for fIN, fOUT, fOUT2 and fPFD parameters. Added tSPO parameter. Updated footnote 6. • MachXO2 Oscillator Output Frequency table – Updated symbol name for tSTABLEOSC. • DC Electrical Characteristics table – Updated conditions for IIL, IIH symbols. • Corrected parameters tDQVBS and tDQVAS • Corrected MachXO2 ZE parameters tDVADQ and tDVEDQ
Pinout Information	Included the MachXO2-4000HE 184 csBGA package.
Ordering Information	Updated part number.

Revision 1.9, April 2012

Section	Change Summary
Architecture	Removed references to TN1200.
Ordering Information	• Updated the Device Status portion of the MachXO2 Part Number Description to include the 50 parts per reel for the WLCSP package. • Added new part number and footnote 2 for LCMXO2-1200ZE-1UWG25ITR50. • Updated footnote 1 for LCMXO2-1200ZE-1UWG25ITR.
Supplemental Information	Removed references to TN1200.

Revision 1.8, March 2012

Section	Change Summary
Introduction	Added 32 QFN packaging information to Features bullets and MachXO2 Family Selection Guide table.
DC and Switching Characteristics	Changed 'STANDBY' to 'USERSTDBY' in Standby Mode timing diagram.
Pinout Information	• Removed footnote from Pin Information Summary tables. • Added 32 QFN package to Pin Information Summary table.
Ordering Information	• Updated Part Number Description and Ordering Information tables for 32 QFN package. • Updated topside mark diagram in the Ordering Information section.

Revision 1.7, February 2012

Section	Change Summary
All	Updated document with new corporate logo.

Revision 1.6, February 2012

Section	Change Summary
All	Data sheet status changed from preliminary to final.
Introduction	MachXO2 Family Selection Guide table – Removed references to 49-ball WLCSP.
DC and Switching Characteristics	• Updated Flash Download Time table. • Modified Storage Temperature in the Absolute Maximum Ratings section. • Updated I_{DK} max in Hot Socket Specifications table. • Modified Static Supply Current tables for ZE and HC/HE devices. • Updated Power Supply Ramp Rates table. • Updated Programming and Erase Supply Current tables. • Updated data in the External Switching Characteristics table. • Corrected Absolute Maximum Ratings for Dedicated Input Voltage Applied for LCMXO2 HC.

© 2026 Lattice Semiconductor Corp. All Lattice trademarks, registered trademarks, patents, and disclaimers are as listed at www.latticesemi.com/legal.
All other brand or product names are trademarks or registered trademarks of their respective holders. The specifications and information herein are subject to change without notice.

Downloaded from Arrow.com.

Section	Change Summary
	• DC Electrical Characteristics table – Minor corrections to conditions for I_{IL}, I_{IH}.
Pinout Information	• Removed references to 49-ball WLCSP. • Signal Descriptions table – Updated description for GND, VCC, and VCCIOx. • Updated Pin Information Summary table – Number of VCCIOs, GNDs, VCCs, and Total Count of Bonded Pins for MachXO2-256, 640, and 640U and Dual Function I/O for MachXO2-4000 332caBGA.
Ordering Information	Removed references to 49-ball WLCSP

Revision 1.4, August 2011

Section	Change Summary
Architecture	Updated information in Clock/Control Distribution Network and sysCLOCK Phase Locked Loops (PLLs).
DC and Switching Characteristics	Updated I_{IL} and I_{IH} conditions in the DC Electrical Characteristics table.
Pinout Information	• Included number of 7:1 and 8:1 gearboxes (input and output) in the pin information summary tables. • Updated Pin Information Summary table: Dual Function I/O, DQS Groups Bank 1, Total General Purpose Single-Ended I/O, Differential I/O Per Bank, Total Count of Bonded Pins, Gearboxes. • Added column of data for MachXO2-2000 49 WLCSP.
Ordering Information	• Updated R1 Device Specifications text section with information on migration from MachXO2-1200-R1 to Standard (non-R1) devices. • Corrected Supply Voltage typo for part numbers: LCMX02-2000UHE-4FG484I, LCMX02-2000UHE-5FG484I, LCMX02-2000UHE-6FG484I. • Added footnote for WLCSP package parts.
Supplemental Information	Removed reference to Stand-alone Power Calculator for MachXO2 Devices. Added reference to AN8086, Designing for Migration from MachXO2-1200-R1 to Standard (non-R1) Devices.

Revision 1.3, May 2011

Section	Change Summary
Multiple	Replaced “SED” with “SRAM CRC Error Detection” throughout the document.
DC and Switching Characteristics	Added footnote 1 to Program Erase Specifications table.
Pinout Information	• Updated Pin Information Summary tables. • Signal name SO/SISPISO changed to SO/SPISO in the Signal Descriptions table.

Revision 1.2, April 2011

Section	Change Summary
All	Data sheet status changed from Advance to Preliminary.
Introduction	Updated MachXO2 Family Selection Guide table.
Architecture	• Updated Supported Input Standards table. • Updated sysMEM Memory Primitives diagram. • Added differential SSTL and HSTL I/O standards.
DC and Switching Characteristics	• Updates following parameters: POR voltage levels, DC electrical characteristics, static supply current for ZE/HE/HC devices, static power consumption contribution of different components – ZE devices, programming and erase Flash supply current. • Added VREF specifications to sysI/O recommended operating conditions. • Updating timing information based on characterization. • Added differential SSTL and HSTL I/O standards.
Ordering Information	• Added Ordering Part Numbers for R1 devices, and devices in WLCSP packages. • Added R1 device specifications.

© 2026 Lattice Semiconductor Corp. All Lattice trademarks, registered trademarks, patents, and disclaimers are as listed at www.latticesemi.com/legal.
All other brand or product names are trademarks or registered trademarks of their respective holders. The specifications and information herein are subject to change without notice.

Downloaded from Arrow.com.

Revision 1.1, January 2011

Section	Change Summary
All	Included ultra-high I/O devices.
DC and Switching Characteristics	• Recommended Operating Conditions table – Added footnote 3. • DC Electrical Characteristics table – Updated data for IIL, IIH. VHYST typical values updated. • Generic DDRX2 Outputs with Clock and Data Aligned at Pin (GDDRX2_TX.ECLK.Aligned) Using PCLK Pin for Clock Input tables – Updated data for TDIA and TDIB. • Generic DDRX4 Outputs with Clock and Data Aligned at Pin (GDDRX4_TX.ECLK.Aligned) Using PCLK Pin for Clock Input tables – Updated data for TDIA and TDIB. • Power-On-Reset Voltage Levels table - clarified note 3. • Clarified VCCIO related recommended operating conditions specifications. • Added power supply ramp rate requirements. • Added Power Supply Ramp Rates table. • Updated Programming/Erase Specifications table. • Removed references to V_{CCP}.
Pinout Information	• Included number of 7:1 and 8:1 gearboxes (input and output) in the pin information summary tables. • Removed references to V_{CCP}.

Revision 1.0, November 2010

Section	Change Summary
All	Initial release.

© 2026 Lattice Semiconductor Corp. All Lattice trademarks, registered trademarks, patents, and disclaimers are as listed at www.latticesemi.com/legal.
All other brand or product names are trademarks or registered trademarks of their respective holders. The specifications and information herein are subject to change without notice.

Downloaded from Arrow.com.

www.latticesemi.com

Downloaded from Arrow.com.