THIS DRAWING IS UNPUBLISHED. RELEASED FOR PUBLICATION MAR ,2006.
© COPYRIGHT 2006 By – ALL RIGHTS RESERVED.

LOC	DIST
E	B

REVISIONS

P	LTR	DESCRIPTION	DATE	DWN	APVD
	B	ECO–09–003420	19MAR09	RITA	BOB
	C	ECO–12–010787	11JUN12	TITAN	MARTIN

NOTES

1. 100 TRAY PACK IN ACCORDANCE WITH AMP SPEC 107–3275
2. SINGLE PACK IN ACCORDANCE WITH AMP SPEC 107–3275
3. Au PLATING
4. Ni PLATING
5. FOR TECHNICAL DATA REFER TO YOUR LOCAL TYCO ELECTRONICS SALES OFFICE
6. ALL DIMENSIONS ARE NOMINAL FOR REFERENCE ONLY UNLESS OTHERWISE STATED

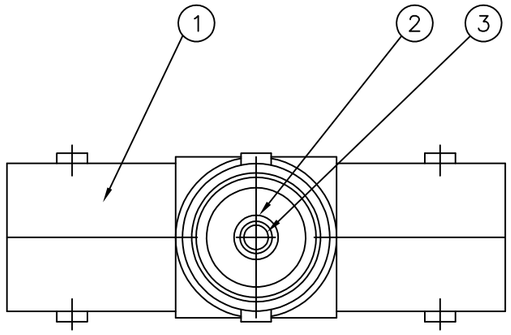

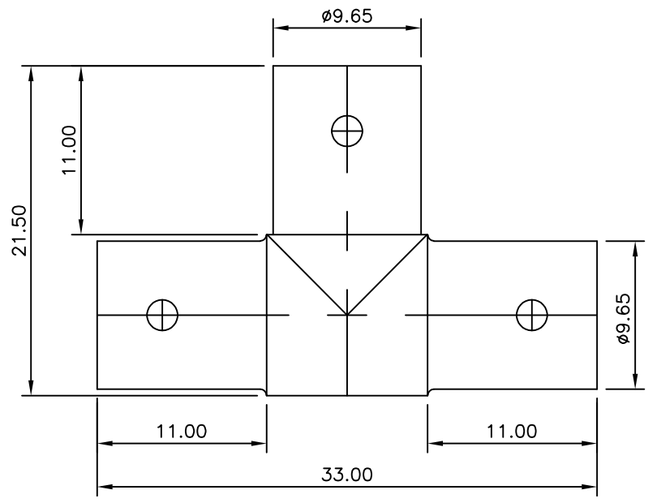

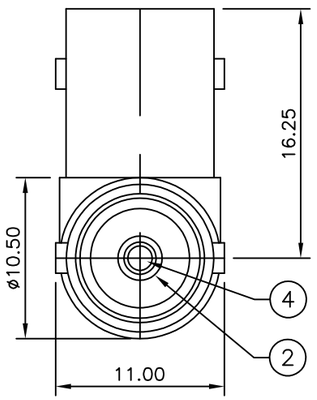

QUANTITY PER ASSY							Obsolete	PARTS LIST		
						1	1	PHOS BRONZE 3	CONTACT 2	4
						1	1	PHOS BRONZE 3	CONTACT 1	3
						3	3	POLYMETHYLPENTENE	INSULATOR	2
						1	1	ZINC ALLOY 4	BODY	1
						5--1	5--0	MATERIAL	DESCRIPTION	ITEM
						2	1			

THIS DRAWING IS A CONTROLLED DOCUMENT.

DIMENSIONS: mm

TOLERANCES UNLESS OTHERWISE SPECIFIED:
0 PLC ± –
1 PLC ± –
2 PLC ± –
3 PLC ± –
4 PLC ± –
ANGLES ± –

MATERIAL: SEE TABLE

FINISH: –

DWN RITA ZUO 19MAR09
CHK ANSON MA 19MAR09
APVD BOB ZHAO 19MAR09
PRODUCT SPEC 108–112000
APPLICATION SPEC –
WEIGHT –

TE Connectivity

NAME: BNC T – ADAPTOR JACK – JACK – JACK
–
–

SIZE	CAGE CODE	DRAWING NO	RESTRICTED TO
A3	00779	C–1634535	–

CUSTOMER DRAWING

SCALE	SHEET	REV
NTS	1 OF 1	C

1470–19 (3/11)

Downloaded from Arrow.com.