AOZ5116QI

High-Current, High-Performance DrMOS Power Module

General Description

The AOZ5116QI is a high efficiency synchronous buck power stage module consisting of two asymmetrical MOSFETs and an integrated driver. The MOSFETs are individually optimized for operation in the synchronous buck configuration. The High-Side MOSFET is optimized to achieve low capacitance and gate charge for fast switching with low duty cycle operation. The Low-Side MOSFET has ultra low ON resistance to minimize conduction loss. AOZ5116QI comes with low noise technology enhancement at switching node to reduce noise interference.

The AOZ5116QI uses a PWM and SMOD# input for accurate control of the power MOSFETs switching activities, is compatible with 3V and 5V (CMOS) logic and supports Tri-State PWM.

A number of features are provided making the AOZ5116QI a highly versatile power module. The boot-strap switch is integrated in the driver. The Low-Side MOSFET diode can be driven into diode emulation mode to provide asynchronous operation and improve light-load performance. The pin-out is also optimized for low parasitics, keeping their effects to a minimum.

Features

- 4.5V to 25V power supply range
- 4.5V to 5.5V driver supply range
- 55A continuous output current
  - Up to 80A with 10ms on pulse
  - Up to 120A with 10us on pulse
- Up to 2MHz switching operation
- 3V/5V PWM and Tri-State input compatible
- Supports Intel® Power State 4
- Thermal Warning Output
- Thermal Shutdown
- Under-Voltage LockOut protection
- SMOD# control for Diode Emulation / CCM operation
- Low Profile 5x5 QFN-31L package

Applications

- Notebook computers
- VRMs for motherboards
- Point of load DC/DC converters
- Video gaming consoles

Green Product

Typical Application Circuit

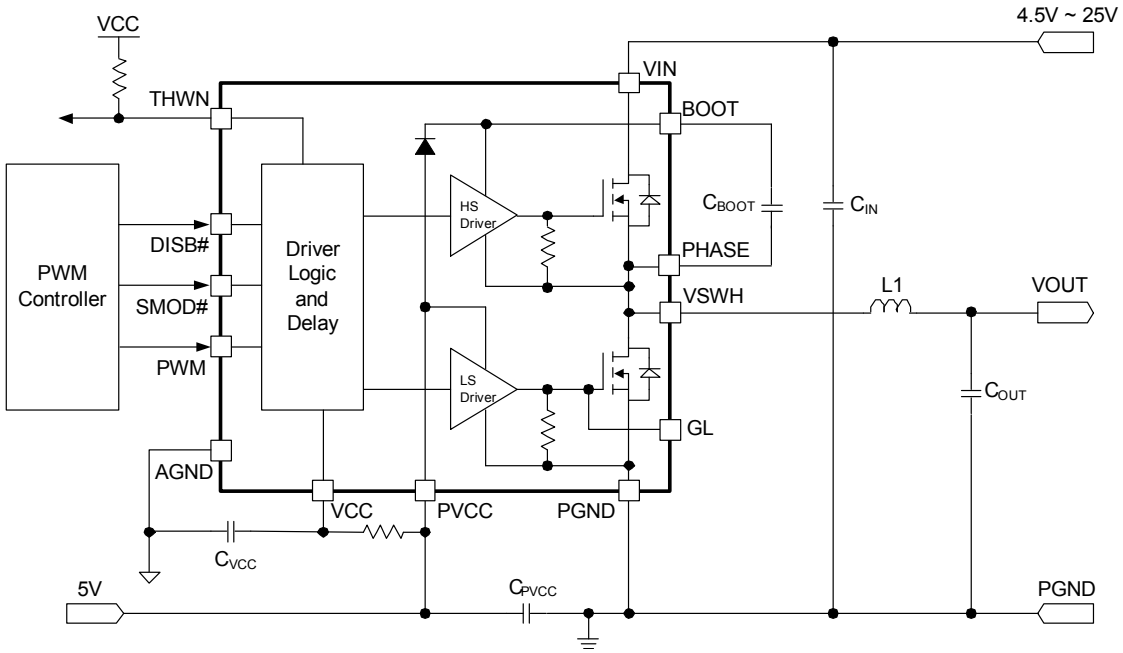

Downloaded from Arrow.com.

Ordering Information

Part Number	Junction Temperature Range	Package	Environmental
AOZ5116QI	-40°C to +150°C	QFN5x5-31L	RoHS

AOS Green Products use reduced levels of Halogens, and are also RoHS compliant.

Pin Configuration

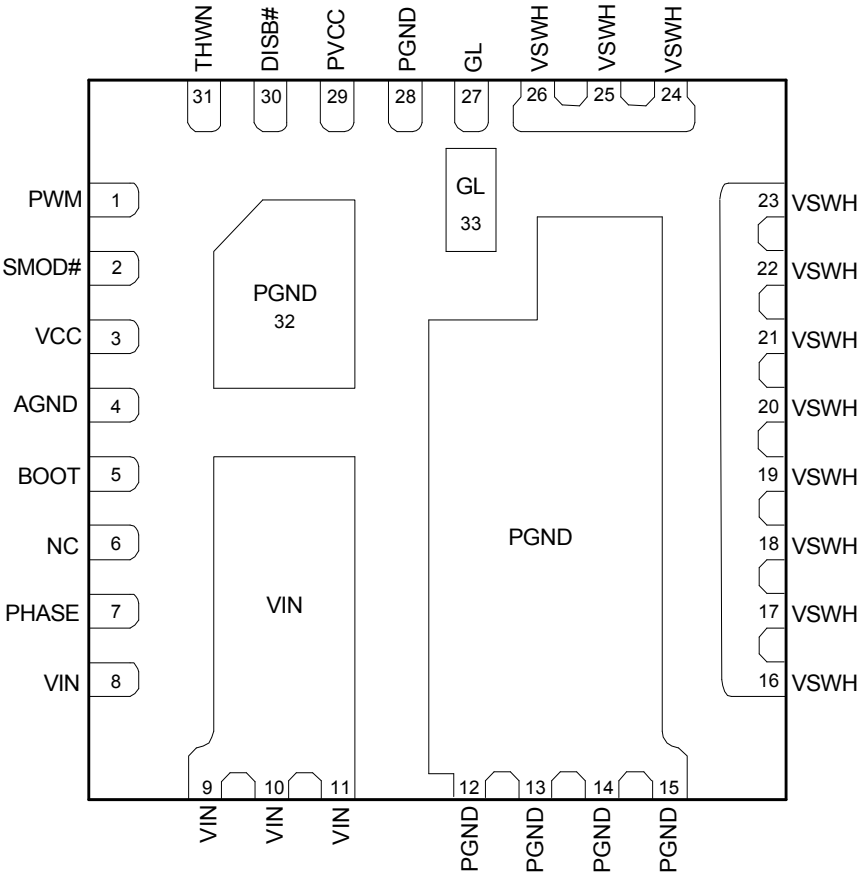

QFN5x5-31L
(Top View)

Downloaded from Arrow.com.

Pin Description

Pin Number	Pin Name	Pin Function
1	PWM	PWM input signal from the controller IC. When DISB#=0V, the internal resistor divider will be disconnected and this pin will be at high impedance.
2	SMOD#	Skip Mode 3−state input (see Table 1 Logic Table): 1. SMOD# = High: The zero cross comparator and the state of PWM determine if the module should performs Zero Cross Detection 2. SMOD# = Mid: Connects PWM to internal resistor divider placing a bias voltage on an undriven PWM pin. Otherwise, logic is equivalent to SMOD# in the high state. 3. SMOD# = Low: Placing PWM into Tri−State pulls the High-Side and Low-Side MOSFET gates low without delay. There is an internal pull−up resistor to VCC on this pin.
3	VCC	5V Bias for Internal Logic Blocks. Ensure the position a 1µF MLCC directly between VCC and AGND (Pin 4).
4	AGND	Signal Ground.
5	BOOT	High-Side MOSFET Gate Driver supply rail. Connect a 100nF ceramic capacitor between BOOT and the PHASE (Pin 7).
6	NC	Internally connected to VIN paddle. It can be left floating (no connect) or tied to VIN.
7	PHASE	This pin is dedicated for bootstrap capacitor AC return path connection from BOOT (Pin 5).
8, 9, 10, 11	VIN	Power stage High Voltage Input (Drain connection of High-Side MOSFET).
12, 13, 14, 15	PGND	Power Ground pin for power stage (Source connection of Low-Side MOSFET).
16, 17, 18, 19, 20, 21, 22, 23, 24, 25, 26	VSWH	Switching node connected to the Source of High-Side MOSFET and the Drain of Low-Side MOSFET. These pins are used for Zero Cross Detection and Anti-Overlap Control as well as main inductor terminal.
27, 33	GL	Low-Side MOSFET Gate connection. This is for test purposes only.
28, 32	PGND	Power Ground pin for High-Side and Low-Side MOSFET Gate Drivers. Ensure to connect 1µF directly between PGND and PVCC (Pin 29).
29	PVCC	5V Power Rail for High-Side and Low-Side MOSFET Drivers. Ensure to position a 1µF MLCC directly between PVCC and PGND (Pin 28).
30	DISB#	Output disable pin. When this pin is pulled to a logic low level, the IC is disabled. There is an internal pull−down resistor to AGND.
31	THWN	Thermal warning indicator. This is an open−drain output. When the temperature at the driver IC die reaches the Over Temperature Threshold, this pin is pulled low.

Downloaded from Arrow.com.

Functional Block Diagram

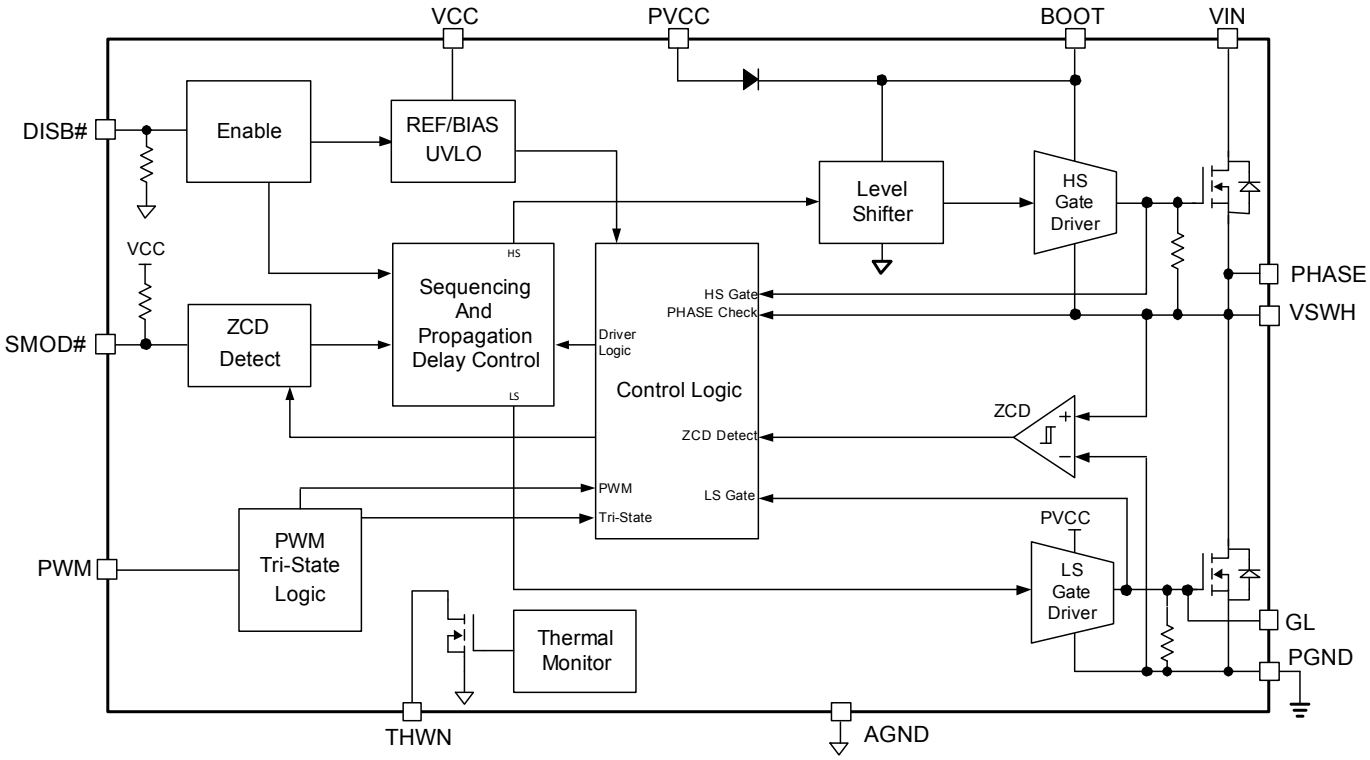

Downloaded from Arrow.com.

Absolute Maximum Ratings

Exceeding the Absolute Maximum ratings may damage the device.

Parameter	Rating
Low Voltage Supply (VCC, PVCC)	-0.3V to 6.5V
High Voltage Supply (VIN)	-0.3V to 30V
Control Inputs (PWM, SMOD#, DISB#)	-0.3V to (VCC+0.3V)
Output (THWN)	-0.3V to (VCC+0.3V)
Bootstrap Voltage DC (BOOT-PGND)	-0.3V to 35V
Bootstrap Voltage Transient(1) (BOOT-PGND)	-8V to 40V
Bootstrap Voltage DC (BOOT-PHASE/VSWH)	-0.3V to 6.5V
BOOT Voltage Transient(1) (BOOT-PHASE/VSWH)	-0.3V to 9V
Switch Node Voltage DC (PHASE/VSWH)	-0.3V to 30V
Switch Node Voltage Transient(1) (PHASE/VSWH)	-8V to 38V
Low-Side Gate Voltage DC (GL)	(PGND-0.3V) to (PVCC+0.3V)
Low-Side Gate Voltage Transient(1) (GL)	(PGND-2.5V) to (PVCC+0.3V)
VSWH Current DC	55A
VSWH Current 10ms Pulse	80A
VSWH Current 10us Pulse	120A
Storage Temperature (T_S)	-65°C to 150°C
Max Junction Temperature (T_J)	150°C
ESD Rating(2)	1.5kV

Notes:

1. Peak voltages can be applied for 10ns per switching cycle.
2. Devices are inherently ESD sensitive, handling precautions are required. Human body model rating: 1.5Ω in series with 100pF.

Recommended Operating Conditions

The device is not guaranteed to operate beyond the Maximum Recommended Operating Conditions.

Parameter	Rating
High Voltage Supply (VIN)	4.5V to 25V
Low Voltage / MOSFET Driver Supply (VCC, PVCC)	4.5V to 5.5V
Control Inputs (PWM, SMOD#, DISB#)	0V to VCC
Operating Frequency	200kHz to 2MHz

Downloaded from Arrow.com.

Electrical Characteristics[3]

T_J = 0°C to 150°C, VIN = 12V, VOUT = 1V, PVCC = VCC = DISB# = 5V, unless otherwise specified. Min/Max values are guaranteed by test, design or statistical correlation.

Symbol	Parameter	Conditions	Min.	Typ.	Max.	Units
GENERAL						
V_{IN}	Power Stage Power Supply		4.5		25	V
V_{CC}	Low Voltage Bias Supply	PVCC = VCC	4.5		5.5	V
$R_{\theta JC}$[4]	Thermal Resistance	Reference to High-Side MOSFET temperature rise		2.5		°C / W
$R_{\theta JA}$[4]		Freq = 300kHz. AOS Demo Board		12.5		°C / W
INPUT SUPPLY AND UVLO						
V_{CC_UVLO}	Undervoltage LockOut	VCC Rising		3.1	3.3	V
V_{CC_HYST}		VCC Hysteresis		400		mV
I_{VCC}	Control Circuit Shutdown Bias Current	DISB# = 0V, SMOD# = 5V		0.1	1	µA
		DISB# = 0V, SMOD# = 0V		6	13	µA
I_{PVCC}	Drive Circuit Operating Current	PWM = 400kHz, 20% Duty Cycle		11		mA
PWM INPUT						
V_{PWM_H}	Logic High Input Voltage		2.65			V
V_{PWM_L}	Logic Low Input Voltage				0.7	V
R_{PWM}	PWM Pin Input Resistance	SMOD# = 0V or 5V	10			MΩ
		SMOD# = 1.7V		68		kΩ
V_{PWM_TRI}	PWM Tri-State Window		1.4		2.0	V
V_{PWM_FLOAT}	PWM Tri-State Voltage Clamp			1.7		V
DISB# INPUT						
$V_{DISB\#_ON}$	Enable Input Voltage		2.0			V
$V_{DISB\#_OFF}$	Disable Input Voltage				0.8	V
$R_{DISB\#}$	DISB# Input Resistance	Pull-Down Resistor		475		kΩ
t_{EN_DEL}	Enable Delay Time	DISB#: L → H, VSWH = PWM			40	us
t_{DIS_DEL}	Disable Delay Time	DISB#: H → L, VSWH = Floating		21	50	ns
SMOD# INPUT						
$V_{SMOD\#_H}$	Logic High Input Voltage		2.65			V
$V_{SMOD\#_L}$	Logic Low Input Voltage				0.7	V
$V_{SMOD\#_MID}$	SMOD# Mid-State Window		1.4		2.0	V
$R_{SMOD\#}$	SMOD# Input Resistance	Pull-Up Resistor		475		kΩ
$t_{SMOD\#_DEL}$	SMOD# Propagation Delay Time				40	ns
ZCD FUNCTION						
V_{ZCD}	Zero Cross Detect Voltage			-6		mV
t_{ZCD_BLANK}	ZCD Blanking Time	SMOD# = 5V		300		ns

Downloaded from Arrow.com.

Electrical Characteristics[3]

T_J = 0°C to 150°C, VIN = 12V, VOUT = 1V, PVCC = VCC = DISB# = 5V, unless otherwise specified. Min/Max values are guaranteed by test, design or statistical correlation.

Symbol	Parameter	Conditions	Min.	Typ.	Max.	Units
GATE DRIVER TIMINGS						
t_{PDLU}	PWM to High-Side Gate	PWM: H → L, GH[5]: H → L		13		ns
t_{PDLL}	PWM to Low-Side Gate	PWM: L → H, GL: H → L		15		ns
t_{PDHU}	LS to HS Gate Deadtime	GL: H → L, GH[5]: L → H		13		ns
t_{PDHL}	HS to LS Gate Deadtime	VSWH: H → 1V, GL: L → H		12		ns
t_{TSEXIT}	Tri-State Propagation Delay	PWM: V_{TRI} → H, VSWH: L → H PWM: V_{TRI} → L, GL: L → H		13	25	ns
THERMAL NOTIFICATION						
T_{JTHWN}	Junction Thermal Threshold	Temperature Rising		150		°C
T_{JHYST}	Junction Thermal Hysteresis			15		°C
I_{THWN}	THWN Open Drain Current				5	mA
THERMAL SHUTDOWN						
T_{JTHDN}	Junction Thermal Threshold	Temperature Rising		180		°C
T_{JTHDN_HYS}	Junction Thermal Hysteresis			25		°C

Notes:

3. All voltages are specified with respect to the corresponding AGND pin.
4. Characterization value. Not tested in production.
5. GH is an internal pin.

Downloaded from Arrow.com.

Logic Table and Timing Diagrams

Table 1. Input Control Truth Table

DISB#	SMOD#[6]	PWM[1]	GH (Not a Pin)	GL
L	X	X	L	L
H	X	H	H	L
H	X	L	L	H
H	Tri-State	Tri-State	L	ZCD[7]
H	H	Tri-State	L	ZCD[7]
H	L	Tri-State	L	L[8]

Notes:

6. PWM input is driven to Tri−State with internal divider resistors when SMOD# is driven to Tri−State and PWM input is not driven externally.
7. GL goes low following 80 ns de−bounce time, 220 ns blanking time and then VSWH exceeding ZCD threshold.
8. There is no delay before GL goes low.

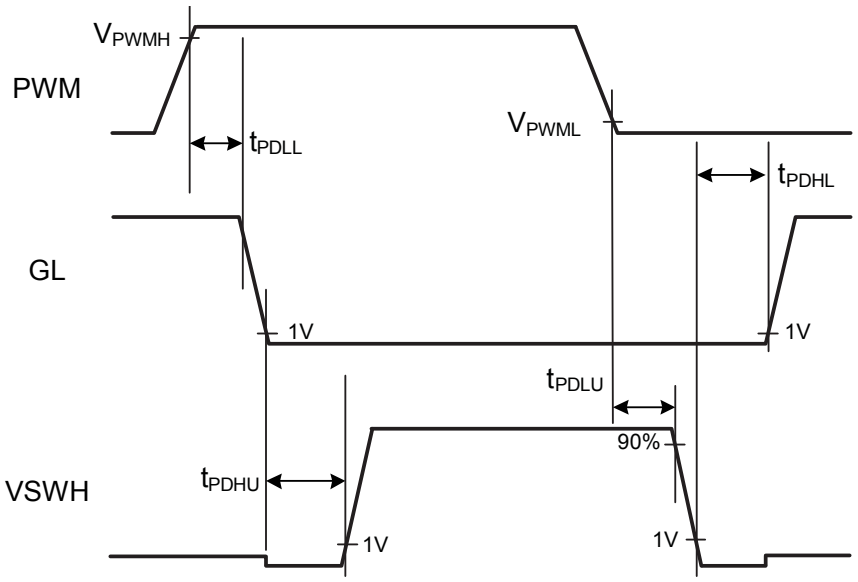

Figure 1. PWM Logic Input Timing Diagram

Downloaded from Arrow.com.

Logic Table and Timing Diagrams *(Continued)*

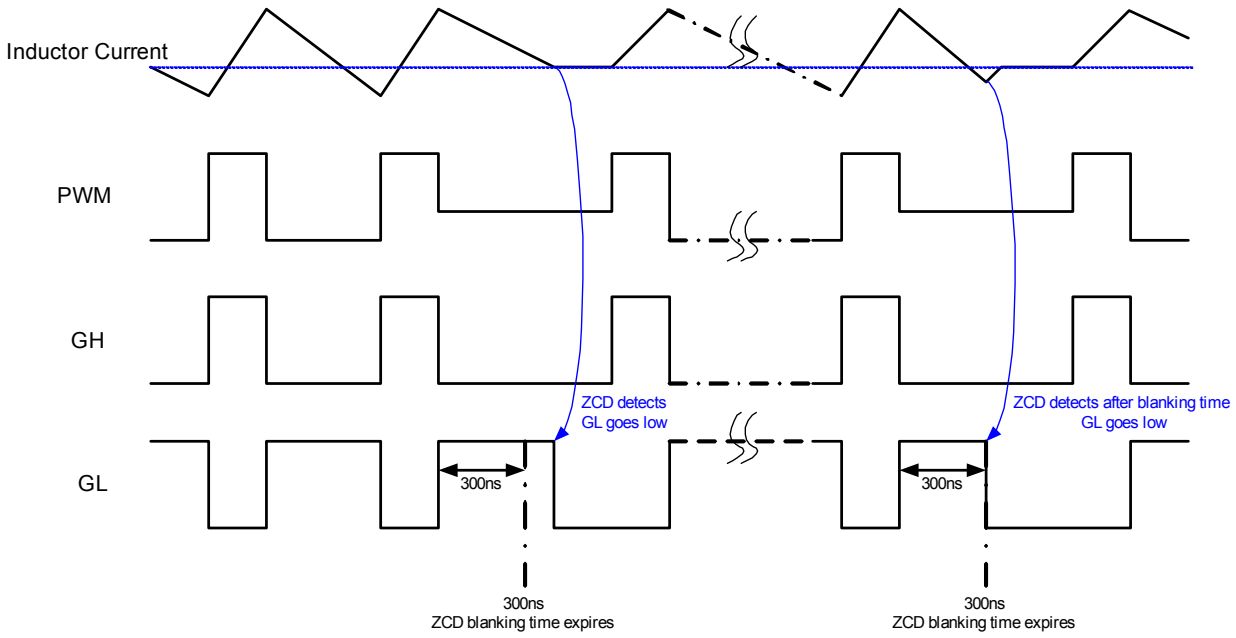

Figure 2. PWM Tri-State Input Logic Timing Diagram, SMOD# = 5V

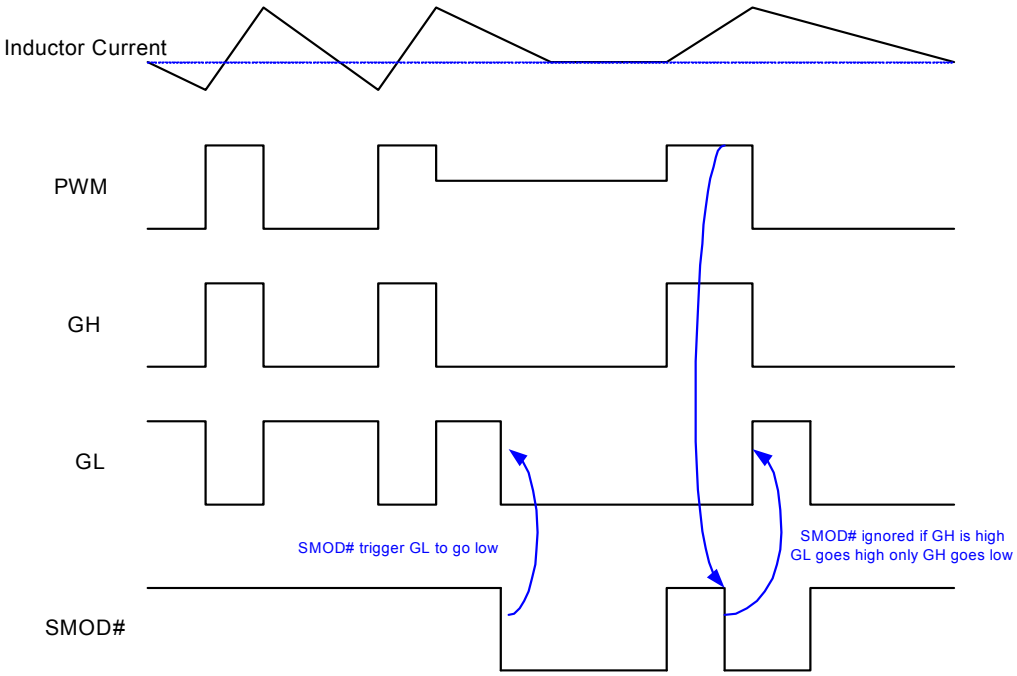

Figure 3. SMOD# Logic Timing Diagram

Downloaded from Arrow.com.

Typical Performance Characteristics

T_A = 25°C, VIN = 12V, VOUT = 1V, PVCC = VCC = 5V, unless otherwise specified.

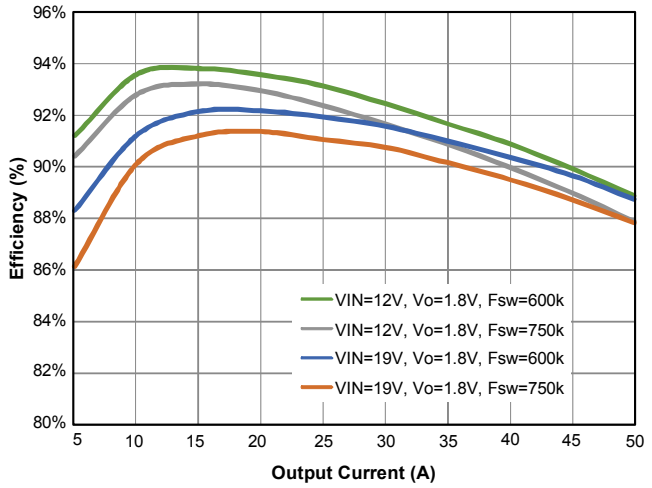

Figure 4. Efficiency vs. Output Current, V_{OUT} = 1.8V

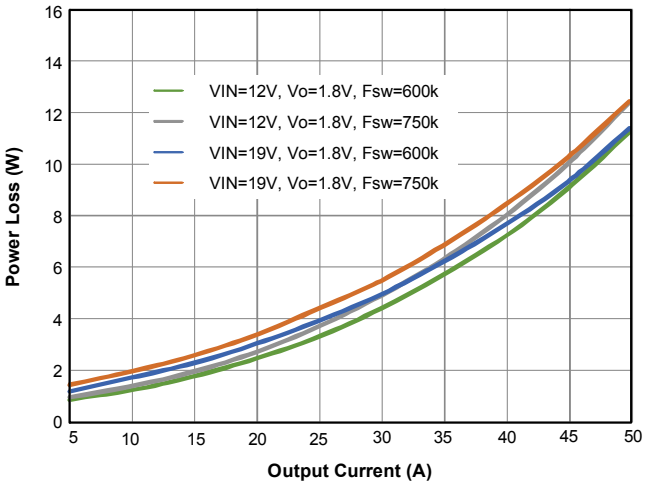

Figure 5. Power Loss vs. Output Current, V_{OUT} = 1.8V

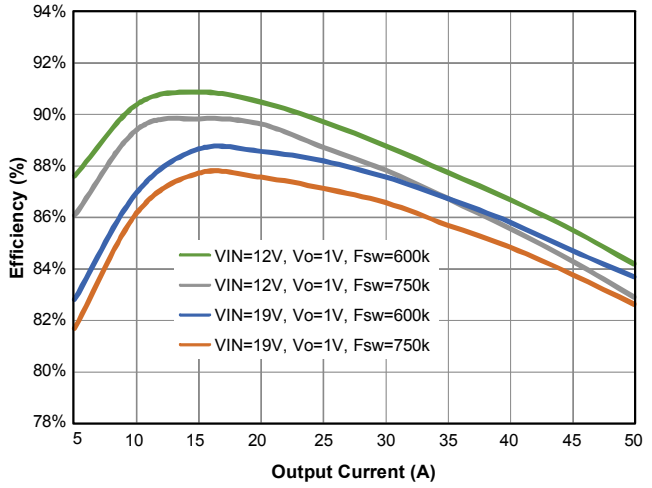

Figure 6. Efficiency vs. Output Current, V_{OUT} = 1.0V

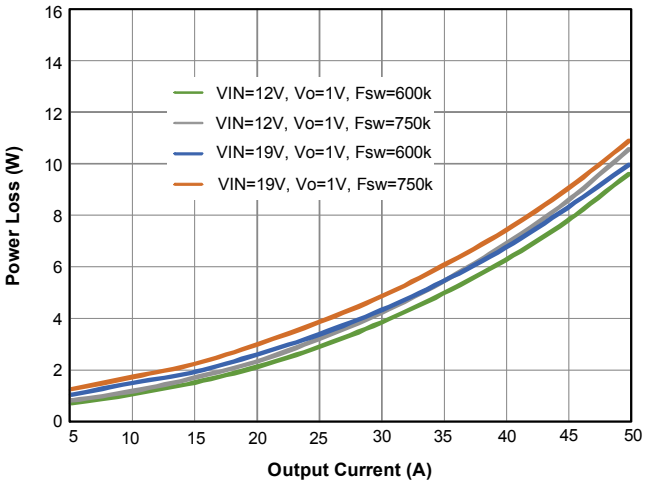

Figure 7. Power Loss vs. Output Current, V_{OUT} = 1.0V

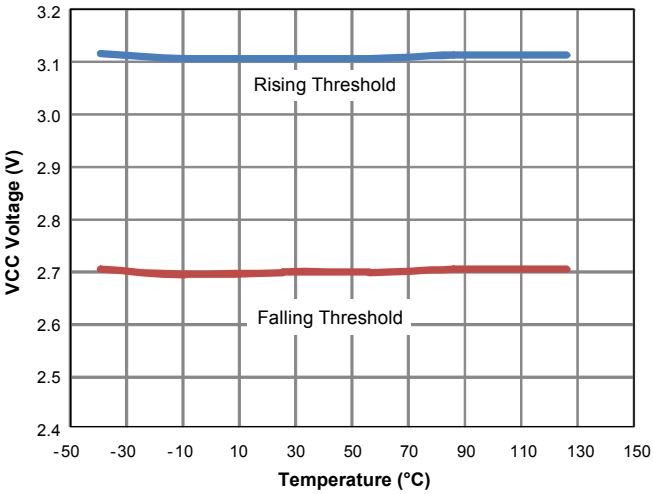

Figure 8. UVLO (VCC) Threshold vs. Temperature

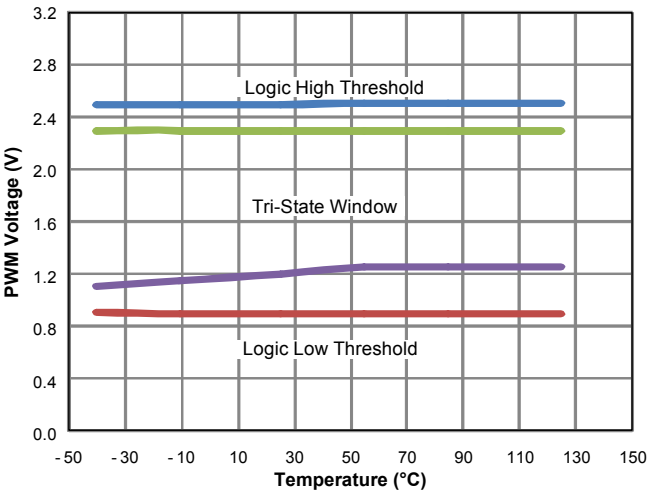

Figure 9. PWM Threshold vs. Temperature

Downloaded from Arrow.com.

Typical Performance Characteristics

T_A = 25°C, VIN = 12V, VOUT = 1V, PVCC = VCC = 5V, unless otherwise specified.

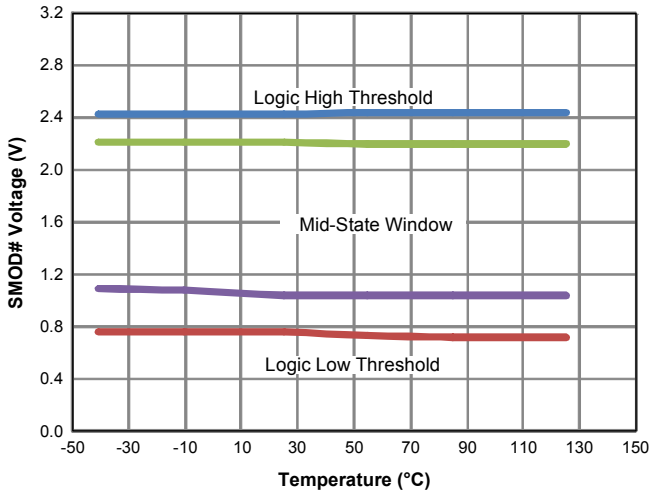

Figure 10. SMOD# Threshold vs. Temperature

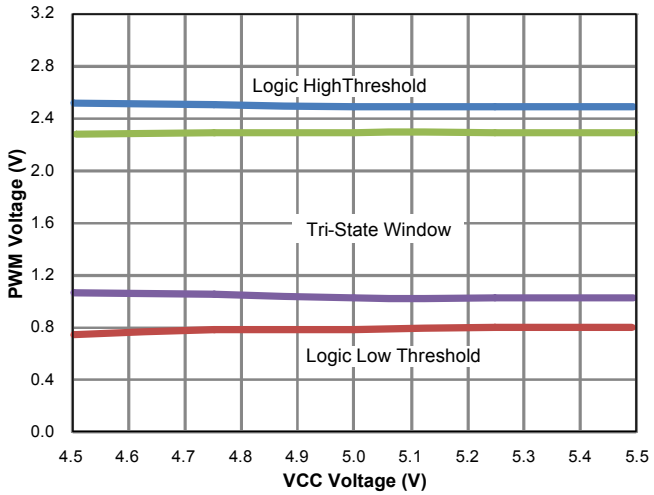

Figure 11. PWM Threshold vs. VCC Voltage

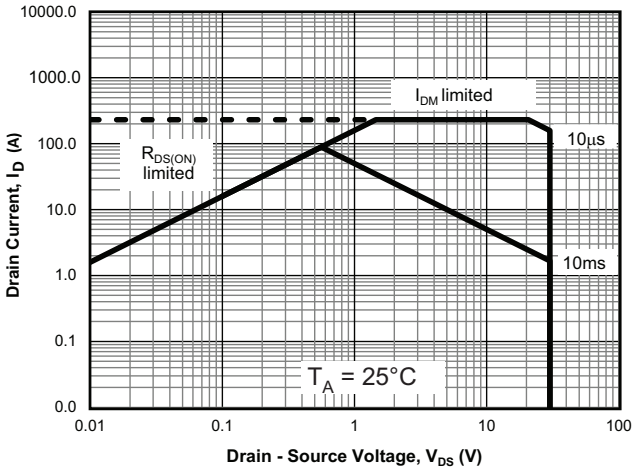

Figure 12. High-Side MOSFET SOA

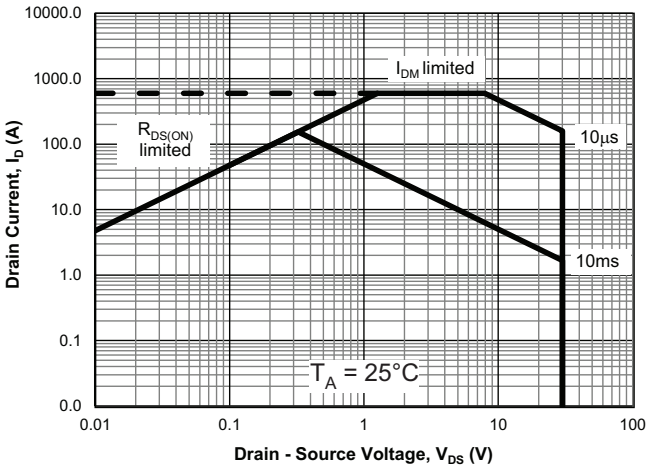

Figure 13. Low-Side MOSFET SOA

Downloaded from Arrow.com.

Application Information

AOZ5116QI is a fully integrated power module designed to work over an input voltage range of 4.5V to 25V with a separate 5V supply for gate drive and internal control circuitry. The MOSFETs are individually optimized for efficient operation on both High-Side and Low-Side for a low duty cycle synchronous buck converter. High current MOSFET Gate Drivers are integrated in the package to minimize parasitic loop inductance for optimum switching efficiency.

Powering the Module and the Gate Drives

An external supply PVCC = 5V is required for driving the MOSFETs. The MOSFETs are designed with optimally customized gate threshold voltages to achieve the most advantageous compromise between high switching speed and minimal power loss. The integrated gate driver is capable of supplying large peak current into the Low-Side MOSFET to achieve fast switching. A ceramic bypass capacitor of 1μF or higher is recommended from PVCC (Pin 29) to PGND (Pin 28). The control logic supply VCC (Pin 3) can be derived from the gate drive supply PVCC (Pin 29) through an RC filter to bypass the switching noise (See Typical Application Circuit).

The boost supply for driving the High-Side MOSFET is generated by connecting a small capacitor (100nF) between the BOOT (Pin 5) and the switching node PHASE (Pin 7). It is recommended that this capacitor C_{BOOT} should be connected to the device across Pin 5 and Pin 7 as closely as possible. A bootstrap diode is integrated into the device to reduce external component count. An optional resistor R_{BOOT} in series with diode C_{BOOT} between 1Ω to 5Ω can be used to slow down the turn on speed of the High-Side MOSFET to achieve both short switching time and low VSWH switching node spikes at the same time.

Under-voltage LockOut

AOZ5116QI starts up to normal operation when VCC rises above the Under-Voltage LockOut (UVLO) threshold voltage. The UVLO release is set at 3.1V typically. Since the PWM control signal is provided from an external controller or a digital processor, extra caution must be taken during start up. AOZ5116QI must be powered up before PWM input is applied.

Normal system operation begins with a soft start sequence by the controller to minimize in-rush current during start-up. Powering the module with a full duty cycle PWM signal may lead to many undesirable consequences due to excessive power. AOZ5116QI provides some protections such as UVLO and thermal monitor. For system level protection, the PWM controller should monitor the current output and protect the load under all possible operating and transient conditions.

Disable (DISB#) Function

The AOZ5116QI can be enabled and disabled through DISB# (Pin 30). The driver output is disabled when DISB# input is connected to AGND. The module would be in standby mode with low quiescent current of less than 1uA. The module will be active when DISB# is connected to VCC Supply. The driver output will follow PWM input signal. A weak pull-down resistor is connected between DISB# and AGND.

Power up sequence design must be implemented to ensure proper coordination between the module and external PWM controller for soft start and system enable/disable. It is recommended that the AOZ5116QI should be disabled before the PWM controller is disabled. This would ensure AOZ5116QI will be operating under the recommended conditions.

Input Voltage VIN

AOZ5116QI is rated to operate over a wide input range from 4.5V to 25V. For high current synchronous buck converter applications, large pulse current at high frequency and high current slew rates (di/dt) will be drawn by the module during normal operation. It is strongly recommended to place a bypass capacitor very close to the package leads at the input supply (VIN). Both X7R or X5R quality surface mount ceramic capacitors are suitable.

The High-Side MOSFET is optimized for fast switching by using a low gate charge (Q_G) device. When the module is operated at high duty cycle ratio, conduction loss from the High-Side MOSFET will be higher. The total power loss for the module is still relatively low but the High-Side MOSFET higher conduction loss may have higher temperature. The two MOSFETs have their own exposed pads and PCB copper areas for heat dissipation. It is recommended that worst case junction temperature be measured for both High-Side MOSFET and Low-Side MOSFET to ensure that they are operating within Safe Operating Area (SOA).

PWM Input

AOZ5116QI is compatible with 3V and 5V (CMOS) PWM logic. Refer to Figure 1 for PWM logic timing and propagation delays diagram between PWM input and the MOSFET gate drives. AOZ5116QI is compatible with 3V and 5V (CMOS) PWM logic.

The PWM is also compatible with Tri-State input. When the PWM output from the external PWM controller is in high impedance or not connected, both High-Side and Low-Side MOSFETs are turned off and VSWH is in high impedance state. Table 2 shows the thresholds level for high-to-low and low-to-high transitions as well as Tri-State window.

Downloaded from Arrow.com.

There is a Holdoff Delay between the corresponding PWM Tri-State signal and the MOSFET gate drivers to prevent spurious triggering of Tri-State mode which may be caused by noise or PWM signal glitches. The Holdoff Delay is typically 330ns.

Table 2. PWM Input and Tri-State Thresholds

Thresholds →	V_{PWMH}	V_{PWML}	V_{TRIH}	V_{TRIL}
AOZ5116QI	2.65V	0.70V	1.40V	2.00V

Note: See Figure 2 for propagation delays and Tri-State window.

Diode Mode Emulation of Low-Side MOSFET (SMOD#)

AOZ5116QI can be operated in the diode emulation or pulse skipping mode using SMOD# (Pin 2). This enables the converter to operate in asynchronous mode during start up, light load, or under pre-bias conditions.

When SMOD# is high, the module will operate in Continuous Conduction Mode (CCM). The Driver logic will use the PWM signal and generate both the High-Side and Low-Side complementary gate drive outputs with minimal anti-overlap delays to avoid cross conduction. When PWM input is at Tri-State level, the driver logic will enter ZCD mode to turn off Low-Side MOSFET if load current crosses zero level.

Table 3. Logic Table when SMOD# = High

PWM	SMOD#	GH	GL
H	H	H	L
Tri-State	H	L	ZCD
L	H	L	H

When SMOD# is low, the module can operate in Discontinuous Conduction Mode (DCM). The High-Side MOSFET gate drive output is not affected but Low-Side MOSFET will enter diode emulation mode. The Low-Side MOSFET signal is dependent on the PWM signal level and not responding to ZCD signal.

Table 4. Logic Table when SMOD# = Low

PWM	SMOD#	GH	GL
H	L	H	L
Tri-State	L	L	L
L	L	L	H

Gate Drives

AOZ5116QI has an internal high current high speed driver that generates the floating gate driver for the High-Side MOSFET and a complementary driver for the Low-Side MOSFET. An internal shoot through protection scheme is implemented to ensure that both MOSFETs cannot be turned on at the same time. The operation of PWM signal transition is illustrated as below.

1) PWM from logic Low to logic High

When the falling edge of Low-Side Gate Driver output GL goes below 1V, the blanking period is activated. After a pre-determined value (t_{PDHU}), the complementary High-Side Gate Driver output GH is turned on.

2) PWM from logic High to logic Low

When the falling edge of switching node VSWH goes below 1V, the blanking period is activated. After a pre-determined value (t_{PDHL}), the complementary Low-Side Gate Driver output GL is turned on.

This mechanism prevents cross conduction across the input bus line VIN and PGND. The anti-overlap circuit monitors the switching node VSWH to ensure a smooth transition between the two MOSFETs under any load transient conditions.

Thermal Warning (THWN)

The driver IC temperature is internally monitored and a thermal warning flag, at THWN (Pin 31), is asserted when the temperature exceeds 150°C. The warning flag is reset when the temperature drops below 120°C. THWN is an open drain output that is pulled to AGND when the temperature exceeds the thermal warning threshold. The AOZ5116QI also incorporates thermal shutdown protection that shuts down the device when the IC temperature exceeds 180°C. Thermal shutdown is reset when the temperature drops below 155°C.

Downloaded from Arrow.com.

PCB Layout Guidelines

AOZ5116QI is a high current module rated for operation up to 2MHz. This requires high switching speed to keep the switching losses and device temperatures within limits. An integrated gate driver within the package eliminates driver-to-MOSFET gate pad parasitic of the package or on PCB.

To achieve high switching speeds, high levels of slew rate (dv/dt and di/dt) will be present throughout the power train which requires careful attention to PCB layout to minimize voltage spikes and other transients. As with any synchronous buck converter layout, the critical requirement is to minimize the path of the primary switching current loop formed by the High-Side MOSFET, Low-Side MOSFET, and the input bypass capacitor C_{IN}. The PCB design is greatly simplified by the optimization of the AOZ5116QI pin out. The power inputs of VIN and PGND are located adjacent to each other and the input bypass capacitors C_{IN} should be placed as close as possible to these pins. The area of the secondary switching loop is formed by Low-Side MOSFET, output inductor L1, and output capacitor C_{OUT} is the next critical requirement. This requires second layer or “Inner 1” to be the PGND plane. VIAs should then be placed near PGND pads.

While AOZ5116QI is a highly efficient module, it still dissipates a significant amount of heat under high power conditions. Special attention is required for thermal design. MOSFETs in the package are directly attached to individual exposed pads (VIN and PGND) to simplify thermal management. Both VIN and VSWH pads should be attached to large areas of PCB copper. Thermal relief pads should be placed to ensure proper heat dissipation to the board. An inner power plane layer dedicated to VIN, typically the high voltage system input, is desirable and VIAs should be provided near the device to connect the VIN pads to the power plane. Significant amount of heat can also be dissipated through multiple PGND pins. A large copper area connected to the PGND pins in addition to the system ground plane through VIAs will further improve thermal dissipation.

As shown on Figure 14, the top most layer of the PCB should comprise of wide and exposed copper area for the primary AC current loop which runs along VIN pad originating from the input capacitors C10, C11, and C12 that are mounted to a large PGND pad. They serve as thermal relief as heat flows down to the VIN exposed pad that fan out to a wider area. Adding VIAs will only help transfer heat to cooler regions of the PCB board through the other layers beneath but serve no purpose to AC activity as all the AC current sees the lowest impedance on the top layer only.

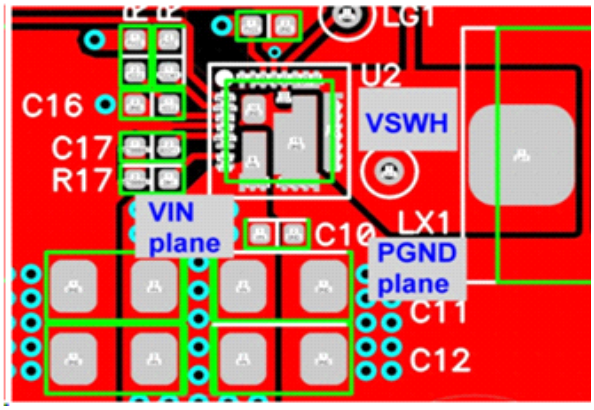

Figure 14. Top Layer of Demo Board, VIN, VSWH and PGND Copper Pads

As the primary and secondary (complimentary) AC current loops move through VIN to VSWH and through PGND to VSWH, large positive and negative voltage spikes appear at the VSWH terminal which are caused by the large internal di/dt produced by the package parasitic. To minimize the effects of this interference at the VSWH terminal, at which the main inductor L1 is mounted, size just enough for the inductor to physically fit. The goal is to employ the least amount of copper area for this VSWH terminal, only enough so the inductor can be securely mounted.

To minimize the effects of switching noise coupling to the rest of the sensitive areas of the PCB, the area directly underneath the designated VSWH pad or inductor terminal is voided and the shape of this void is replicated descending down through the rest of the layers. Refer to Figure 15.

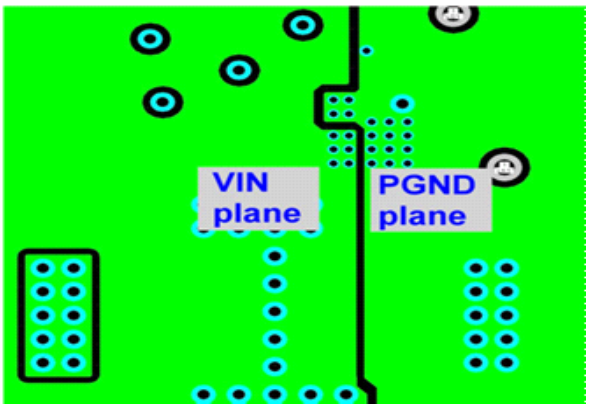

Figure 15. Bottom Layer of PCB

Positioning VIAs through the landing pattern of the VIN and PGND thermal pads will help quickly facilitate the thermal build-up and spread the heat much more quickly towards the surrounding copper layers descending from

Downloaded from Arrow.com.

the top layer. (See RECOMMENDED LANDING PATTERN AND VIA PLACEMENT section).

The exposed pads dimensional footprint of the 5x5 QFN package is shown on the package dimensions page. For optimal thermal relief, it is recommended to fill the PGND and VIN exposed landing pattern with 10mil diameter VIAs. 10mil diameter is a commonly used VIA diameter as it is optimally cost effective based on the tooling bit used in manufacturing. Each via is associated with a 20mil diameter keep out. Maintain a 5mil clearance (127um) around the inside edge of each exposed pad in case of solder overflow, which could potentially short with the adjacent exposed thermal pad.

Downloaded from Arrow.com.

Package Dimensions, QFN5x5A-31L

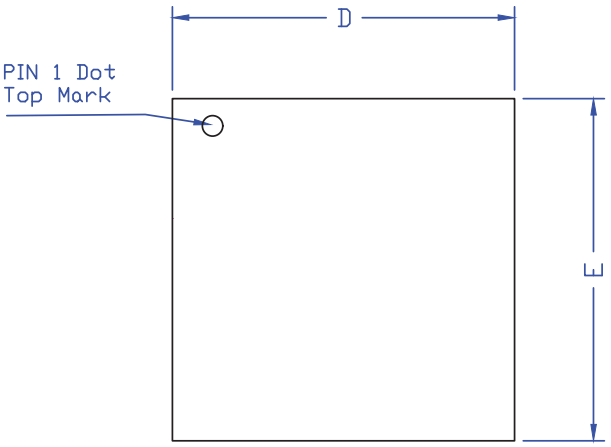

TOP VIEW

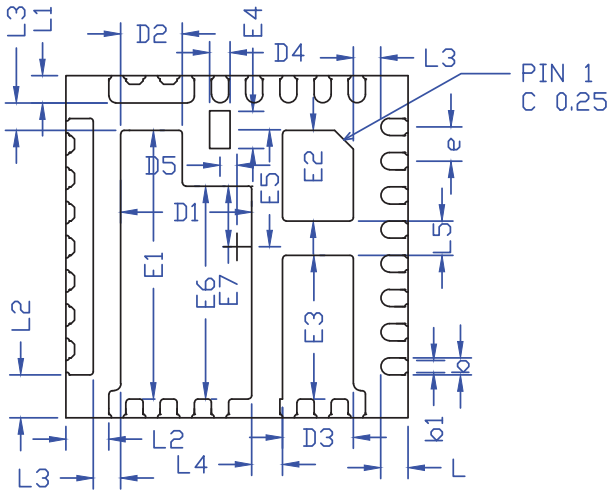

BOTTOM VIEW

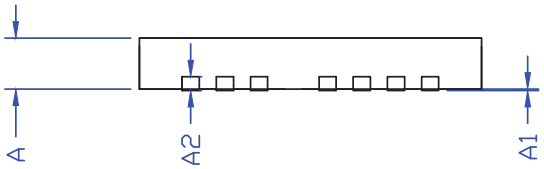

SIDE VIEW

SYMBOLS	DIMENSION IN MM			DIMENSION IN INCHES		
	MIN	NOM	MAX	MIN	NOM	MAX
A	0.70	0.75	0.80	0.028	0.030	0.031
A1	0.00	-	0.05	0.000	-	0.002
A2	0.20REF			0.008REF		
D	4.90	5.00	5.10	0.193	0.197	0.201
E	4.90	5.00	5.10	0.193	0.197	0.201
D1	1.87	1.92	1.97	0.074	0.076	0.078
D2	0.85	0.90	0.95	0.033	0.035	0.037
D3	0.99	1.04	1.09	0.039	0.041	0.043
D4	0.25	0.30	0.35	0.010	0.012	0.014
D5	0.20	0.25	0.30	0.008	0.010	0.012
E1	3.88	3.93	3.98	0.153	0.155	0.156
E2	1.27	1.32	1.37	0.050	0.052	0.054
E3	2.05	2.10	2.15	0.081	0.083	0.085
E4	0.50	0.55	0.60	0.020	0.022	0.024
E5	1.66	1.71	1.76	0.065	0.067	0.069
E6	3.06	3.11	3.16	0.121	0.122	0.124
E7	0.84	0.89	0.94	0.033	0.035	0.037
L	0.35	0.40	0.45	0.014	0.016	0.018
L1	0.35	0.40	0.45	0.014	0.016	0.018
L2	0.58	0.63	0.68	0.023	0.025	0.027
L3	0.35	0.40	0.45	0.014	0.016	0.018
L4	0.40	0.45	0.50	0.016	0.018	0.020
L5	0.45	0.50	0.55	0.018	0.020	0.022
b	0.20	0.25	0.30	0.008	0.010	0.012
b1	0.13	0.18	0.23	0.005	0.007	0.009
e	0.50BSC			0.020BSC		

RECOMMENDED LAND PATTERN

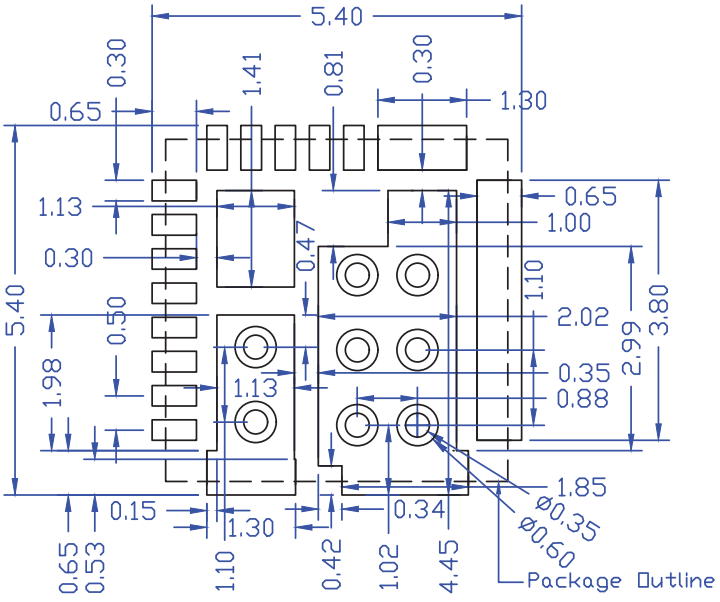

UNIT: mm

NOTE
CONTROLLING DIMENSION IS MILLIMETER.
CONVERTED INCH DIMENSIONS ARE NOT NECESSARILY EXACT.

Downloaded from Arrow.com.

Tape and Reel Drawing, QFN5x5A-31L

QFN5x5 Carrier Tape

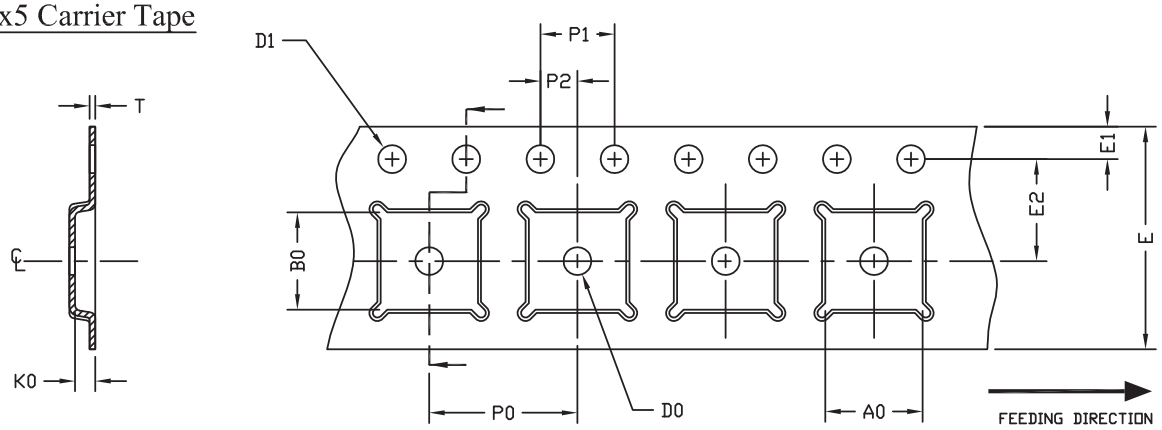

UNIT: MM

PACKAGE	A0	B0	K0	D0	D1	E	E1	E2	P0	P1	P2	T
QFN5x5 (12 mm)	5.25 ±0.10	5.25 ±0.10	1.10 ±0.10	1.50 MIN.	1.50 +0.1 −0.0	12.0 ±0.3	1.75 ±0.10	5.50 ±0.05	8.00 ±0.10	4.00 ±0.10	2.00 ±0.05	0.30 ±0.05

QFN5x5 Reel

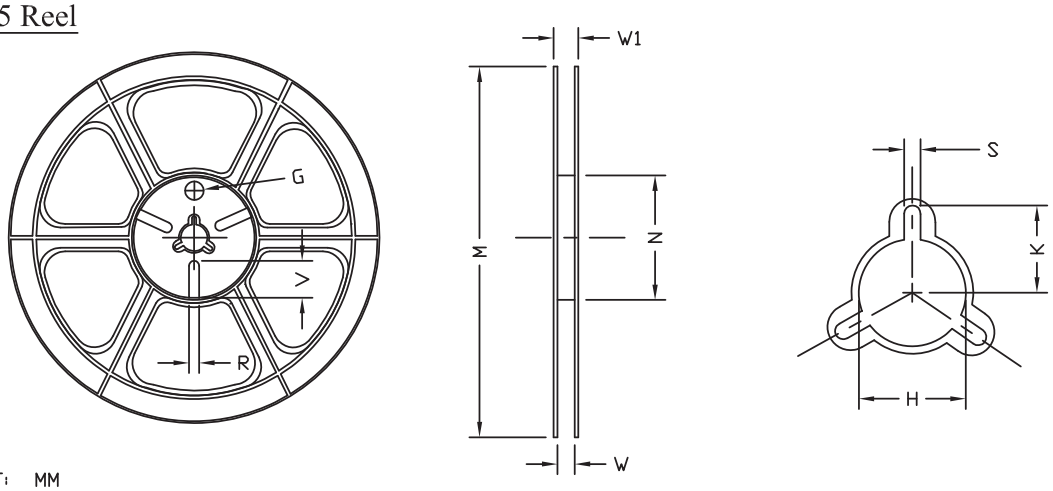

UNIT: MM

TAPE SIZE	REEL SIZE	M	N	W	W1	H	K	S	G	R	V
12 mm	ø330	ø330.0 ±2.0	ø79.0 ±1.0	12.4 +2.0 −0.0	17.0 +2.6 −1.2	ø13.0 ±0.5	10.5 ±0.2	2.0 ±0.5	---	---	---

Leader / Trailer & Orientation

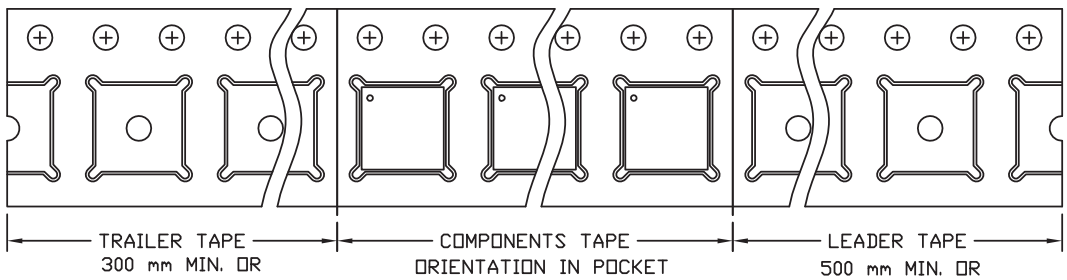

Unit Per Reel: 3000pcs

Downloaded from Arrow.com.

Part Marking

AOZ5116QI
(5mm x 5mm QFN)

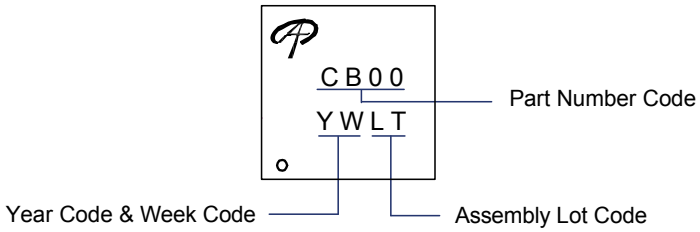

LEGAL DISCLAIMER

Applications or uses as critical components in life support devices or systems are not authorized. AOS does not assume any liability arising out of such applications or uses of its products. AOS reserves the right to make changes to product specifications without notice. It is the responsibility of the customer to evaluate suitability of the product for their intended application. Customer shall comply with applicable legal requirements, including all applicable export control rules, regulations and limitations.

AOS' products are provided subject to AOS' terms and conditions of sale which are set forth at:
http://www.aosmd.com/terms_and_conditions_of_sale

LIFE SUPPORT POLICY

ALPHA AND OMEGA SEMICONDUCTOR PRODUCTS ARE NOT AUTHORIZED FOR USE AS CRITICAL COMPONENTS IN LIFE SUPPORT DEVICES OR SYSTEMS.

As used herein:

1. Life support devices or systems are devices or systems which, (a) are intended for surgical implant into the body or (b) support or sustain life, and (c) whose failure to perform when properly used in accordance with instructions for use provided in the labeling, can be reasonably expected to result in a significant injury of the user.

2. A critical component in any component of a life support, device, or system whose failure to perform can be reasonably expected to cause the failure of the life support device or system, or to affect its safety or effectiveness.

Downloaded from Arrow.com.