MECHANICAL DEMENSION

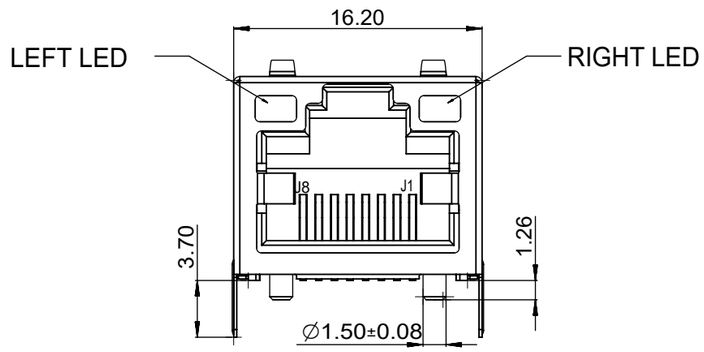

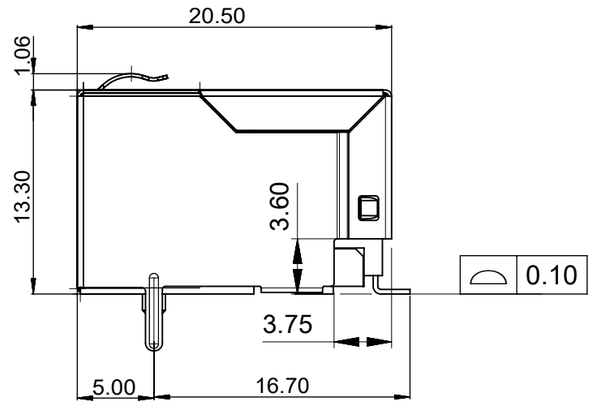

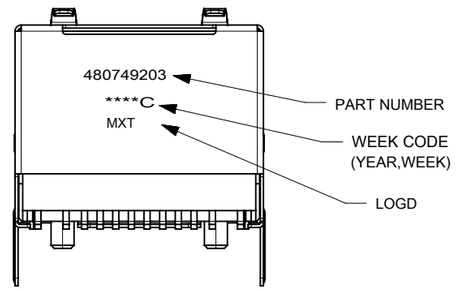

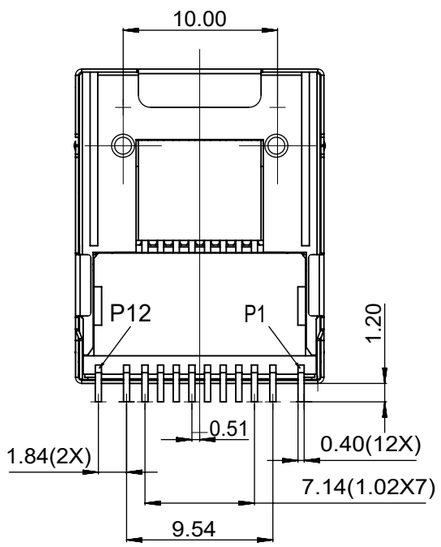

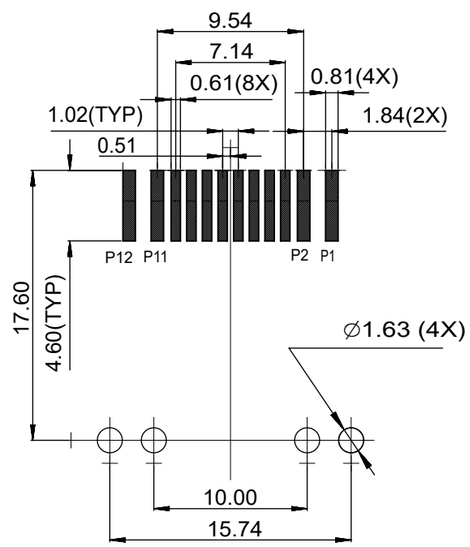

RECOMMENDED PCB LAYOUT

ALL DIMENSION TOLERANCE ARE ±0.05

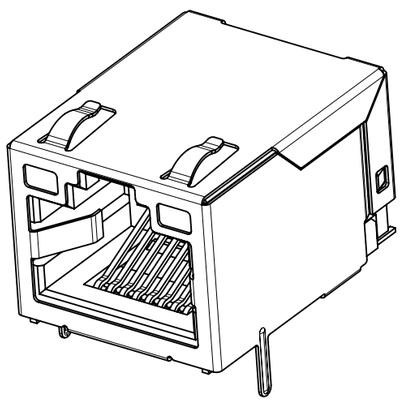

NOTES:

1.MATERIAL:

HOUSING: HIGH TEMP THERMOPLASTIC,UL94V-0,COLOR BLACK.

RJ45 TERMINAL: PHOSPHOR BRONZE.

TERMINAL P: BRASS

SHELL: BRASS

2.PLATING:

RJ45 TERMINAL:

CONTACT AREA: GOLD(Au),THICKNESS=30 MICROINCH/0.76 MICROMETER MIN.

SOLID TAIL:TIN(Sn), THICKNESS=80 MICROINCH/2.00 MICROMETER MIN.

UNDER PLATE: NICKEL(Ni), THICKNESS=50 MICROINCH/1.27 MICROMETER MIN.

TERMINAL P:

TIN(Sn), THICKNESS=100 MICROINCH/2.54 MICROMETER MIN. OVERALL

SHELL:

SOLDER TAIL: PRE-SOLDER TIN(Sn).

UNDER PLATE: NICKEL(Ni), THICKNESS=50 MICROINCH/1.27 MICROMETER MIN.

3.FOR IR REFLOW PROCESS. TIN PLATED AREA.

4.RECOMMENDED PCB THICKNESS=1.60±0.05

5.PRODUCT SPECIFICATION REFER TO PS-48074-006.

6.TEST SUMMARY REFER TO TS-48074-006.

7.PACKAGING SPECIFICATION REFER TO PK-48074-101.

8.COPLANARITY: 0.10 MAX.

9.LEAD FREE & RoHS COMPLIANT PRODUCT.

PRE-RELEASE REFERENCE USE ONLY

THIS DRAWING CONTAINS INFORMATION THAT IS PROPRIETARY TO MOLEX ELECTRONIC TECHNOLOGIES, LLC AND SHOULD NOT BE USED WITHOUT WRITTEN PERMISSION

FUNCTIONAL SYMBOLS	DIMENSION UNITS: mm	SCALE: 1:1	CURRENT REV DESC:
= 0	GENERAL TOLERANCES (UNLESS SPECIFIED)		
= 0	ANGULAR TOL ± 3.0 °		
= 0	4 PLACES ±		EC NO: 762427
DIVISIONAL SYMBOLS	3 PLACES ±		DRWN: DARIEY 2023/09/11
	2 PLACES ± 0.25		CHK'D: RLI09 2023/09/25
	1 PLACE ± 0.25		APPR: RLI09 2023/09/25
	0 PLACES ±		INITIAL REVISION:
	DRAFT WHERE APPLICABLE MUST REMAIN WITHIN DIMENSIONS		DRWN: JKACHLIC 2016/09/21
			APPR: JKACHLIC 2016/10/13

FIRST ANGLE PROJECTION | DRAWING: A3-SIZE | SERIES: 48074

molex

IMPROVED MODULAR JACK
INTERGRATED MAGNETICS SMT,LED

PRODUCT CUSTOMER DRAWING

DOCUMENT NUMBER	DOC TYPE	DOC PART	REVISION
RSD-48074-203	PSD	001	A

MATERIAL NUMBER	CUSTOMER	SHEET NUMBER
	RESTRICTED	1 OF 2

DOCUMENT STATUS		RELEASE DATE	

Downloaded from Arrow.com.

SCHEMATIC:

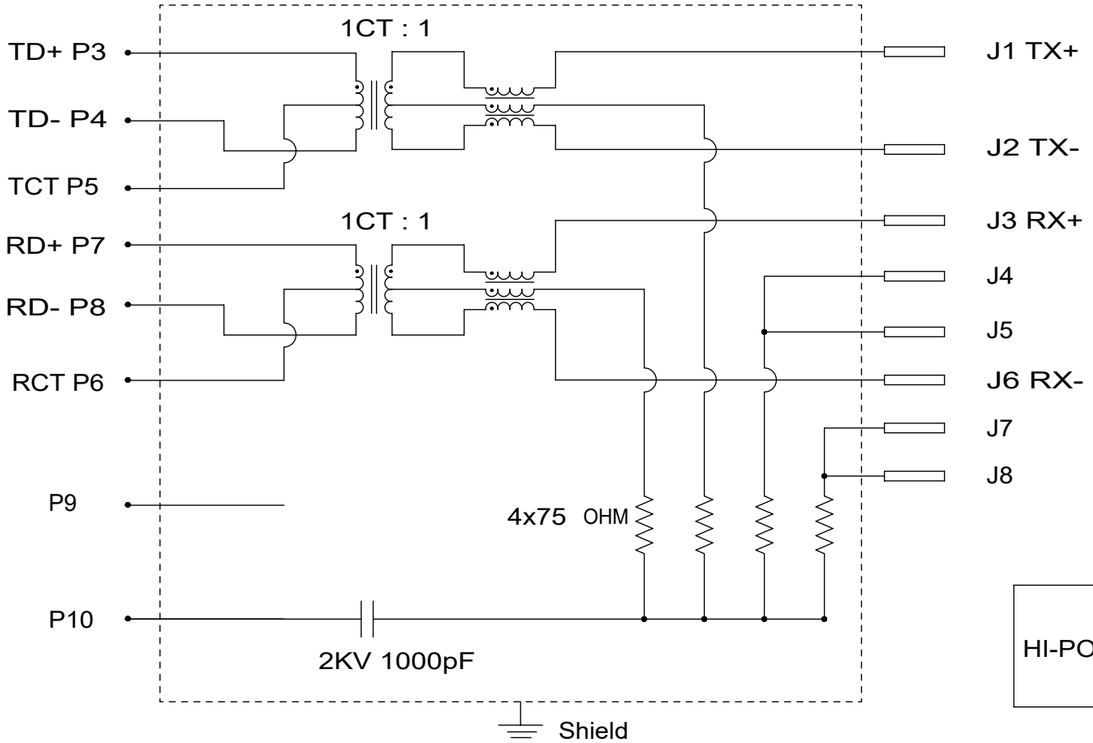

MAGNETIC ELECTRICAL SPECIFICATION

PARAMETER	SPECIFICATIONS		
INSERTION LOSS	100 KHz		
	1.0 dB MAX.		
RETURN LOSS (Z OUT=100 OHM±15%)	1-10 MHz	30 MHz	60-80 MHz
	20 dB MIN	16 dB MIN	12 dB MIN
CROSSTALK	1-10 MHz	30-60 MHz	60-100 MHz
	40 dB MIN	35 dB MIN	30 dB MIN
COMMON MODE REJECTION RATIO	1-50 MHz	50-130 MHz	
	30 dB MIN	20 dB MIN	

HI-POT	(P1-P12 And Shield)Short TO PORT (J1-J8)Short	AC1500V 1.5mA 60SEC
	(P1-P12 And Shield)Short TO PORT (J1-J8)Short	DC2250V 1.5mA 60SEC

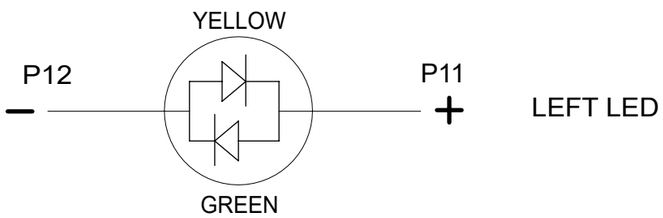

LED ELECTRICAL SPECIFICATION

PARAMETER	YELLOW/GREEN		GREEN		UNITS	TEST CONDITIONS
POWER DISSIPATION	60		60		mW	
REVERSE VOLTAGE	5		5		V	
PEAK WAVELENGTH	585~597/564.5~576.5		564.5~576.5		nm	I F=20mA
FORWARD VOLTAGE	2.1	MAX.=2.5	2.2	MAX.=2.5	V	I F=20mA

LED SCHEMATIC:

PRE-RELEASE REFERENCE USE ONLY

THIS DRAWING CONTAINS INFORMATION THAT IS PROPRIETARY TO MOLEX ELECTRONIC TECHNOLOGIES, LLC AND SHOULD NOT BE USED WITHOUT WRITTEN PERMISSION

FUNCTIONAL SYMBOLS: FA = 0, FC = 0, FP = 0

DIVISIONAL SYMBOLS

DIMENSION UNITS: mm — SCALE: 1:1

GENERAL TOLERANCES (UNLESS SPECIFIED)

ANGULAR TOL	±	3.0 °
4 PLACES	±	
3 PLACES	±	
2 PLACES	±	0.25
1 PLACE	±	0.25
0 PLACES	±	

DRAFT WHERE APPLICABLE MUST REMAIN WITHIN DIMENSIONS

CURRENT REV DESC:

EC NO: 762427
DRWN: DARIEY 2023/09/11
CHK'D: RLI09 2023/09/25
APPR: RLI09 2023/09/25

INITIAL REVISION:
DRWN: JKACHLIC 2016/09/21
APPR: JKACHLIC 2016/10/13

FIRST ANGLE PROJECTION — DRAWING: A3-SIZE — SERIES: 48074

molex

IMPROVED MODULAR JACK
INTERGRATED MAGNETICS SMT,LED

PRODUCT CUSTOMER DRAWING

DOCUMENT NUMBER	DOC TYPE	DOC PART	REVISION
RSD-48074-203	PSD	001	A

MATERIAL NUMBER — CUSTOMER: RESTRICTED — SHEET NUMBER: 2 OF 2

DOCUMENT STATUS		RELEASE DATE	

FORMAT: molex-tb-nov-A3

Downloaded from Arrow.com.

MECHANICAL DEMENSION

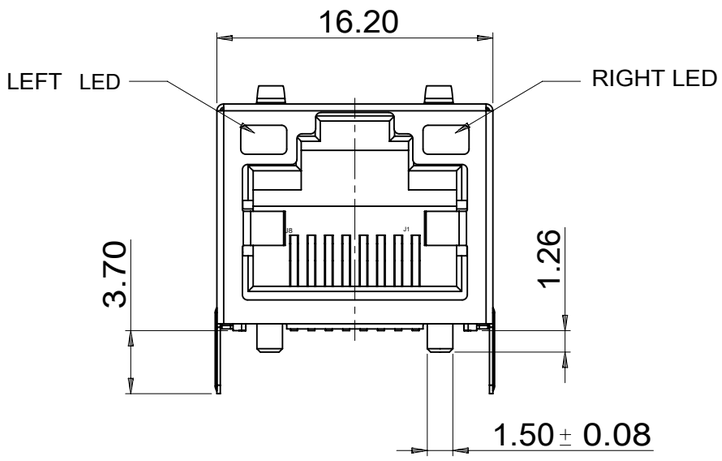

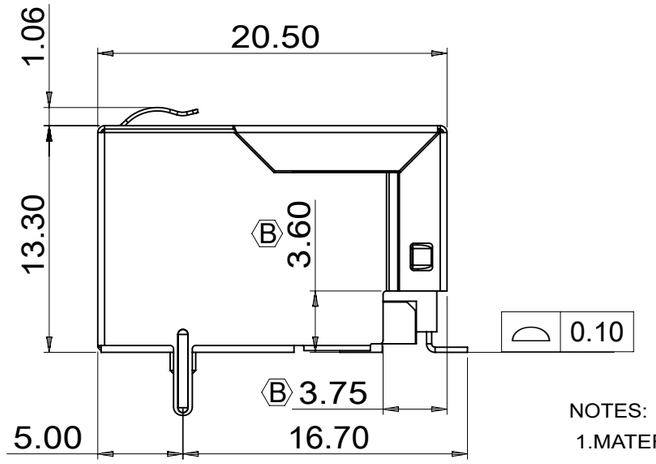

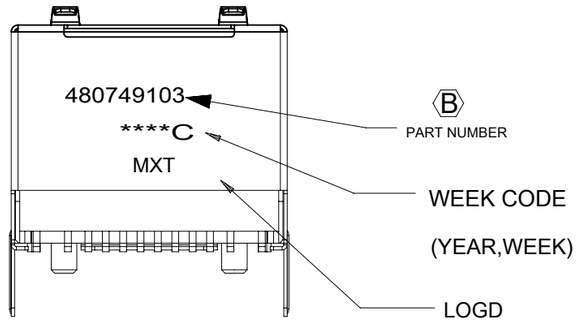

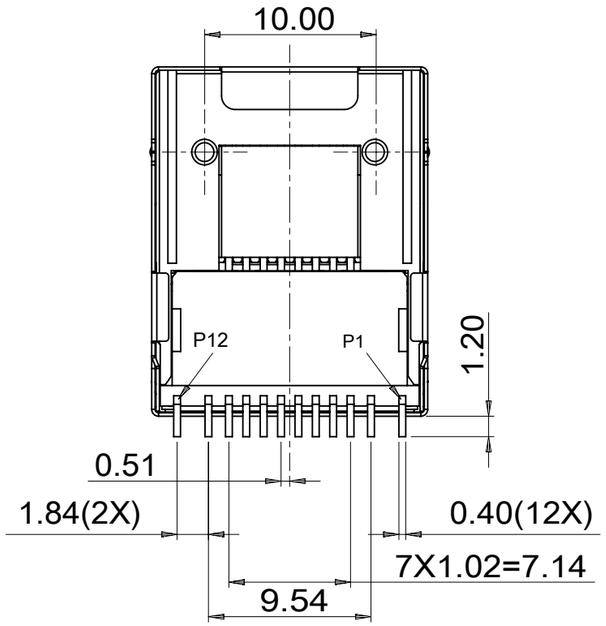

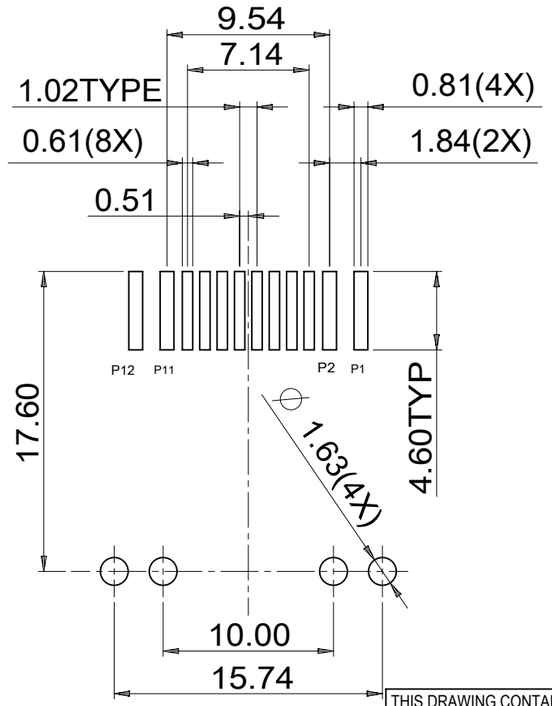

RECOMMENDED PCB LAYOUT
ALL DIMENSION TOLERANCE ARE ± 0.05

NOTES:

1.MATERIAL:
HOUSING:HIGH TEMP THERMOPLASTIC,UL94V-0,COLOR BLACK.
RJ45 TERMINAL:PHOSPHOR BRONZE.
TERMINAL P:BRASS
SHELL:BRASS

2.PLATING:
RJ45 TERMINAL:
CONTACT AREA:GOLD(Au),THICKNESS=30 MICROINCH/0.76 MICROMETER MIN.
SOLID TAIL:TIN(Sn), THICKNESS=80 MICROINCH/2.00 MICROMETER MIN.
UNDER PLATE:NICKEL(Ni), THICKNESS=50 MICROINCH/1.27 MICROMETER MIN.
TERMINAL P:
TIN(Sn), THICKNESS=100 MICROINCH/2.54 MICROMETER MIN. OVERALL
SHELL:
SOLDER TAIL:PRE-SOLDER TIN(Sn).
UNDER PLATE:NICKEL(Ni), THICKNESS=50 MICROINCH/1.27 MICROMETER MIN.

3.FOR IR REFLOW PROCESS. TIN PLATED AREA.
4.RECOMMENDED PCB THICKNESS=1.60±0.05
5.PRODUCT SPECIFICATION REFER TO PS-48074-006.
6.TEST SUMMARY REFER TO TS-48074-006.
7.PACKAGING SPECIFICATION REFER TO PK-48074-101.
8.COPLANARITY: 0.10 MAX.
9.LEAD FREE & RoHS COMPLIANT PRODUCT.

THIS DRAWING CONTAINS INFORMATION THAT IS PROPRIETARY TO MOLEX ELECTRONIC TECHNOLOGIES, LLC AND SHOULD NOT BE USED WITHOUT WRITTEN PERMISSION

EC NO: 762427	2018/08/20		
DRWN: ME	2023/09/25		
CHK'D: RLI09	2023/09/25		
APPR: RLI09			
B	REV		

GENERAL TOLERANCES (UNLESS SPECIFIED)
ANGULAR TOL ± 3.0 °

4 PLACES	±	
3 PLACES	±	
2 PLACES	±	0.25
1 PLACE	±	0.25
0 PLACES	±	

DRAFT WHERE APPLICABLE MUST REMAIN WITHIN DIMENSIONS

DIMENSION UNITS	mm
SCALE	
DRWN BY	FYANG05
DATE	2014/09/23
CHK'D BY	
DATE	
APPR BY	RZHANG
DATE	2015/03/12
DRAWING SIZE	A3
THIRD ANGLE PROJECTION	

molex®

IMPROVED MODULAR JACK
INTERGRATED MAGNETICS SMT,LED

PRODUCT CUSTOMER DRAWING

SERIES	MATERIAL NUMBER	CUSTOMER
48074	480749103	GENERAL MARKET

DOCUMENT NUMBER	DOC TYPE	DOC PART	SHEET NUMBER
SD-48074-103	PSD	001	1 OF 2

RELEASE STATUS	P1	RELEASE DATE	2023/09/25 08:22:18

FORMAT: master_tb_prod_A3
DATE: 2013/12/14
Downloaded from Arrow.com.

SCHEMATIC:

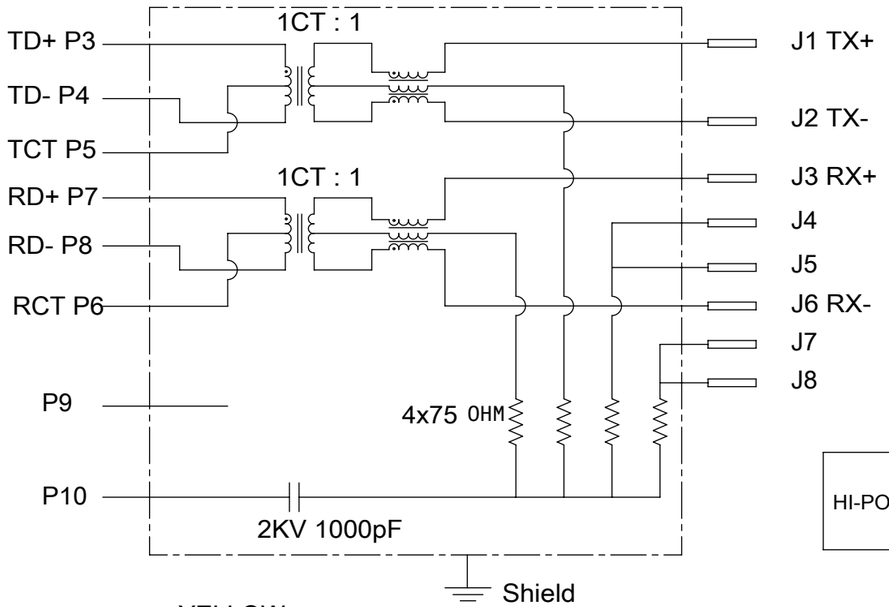

MAGNETIC ELECTRICAL SPECIFICATION

PARAMETER	SPECIFICATIONS		
INSERTION LOSS	100 KHz		
	1.0 dB MAX.		
RETURN LOSS (Z OUT=100 OHM15%)	1-10 MHz	30 MHz	60-80 MHz
	20 dB MIN	16 dB MIN	12 dB MIN
CROSSTALK	1-10 MHz	30-60 MHz	60-100 MHz
	40 dB MIN	35 dB MIN	30 dB MIN
COMMON MODE REJECTION RATIO	1-50 MHz	50-130 MHz	
	30 dB MIN	20 dB MIN	

HI-POT	(P1-P12 And Shield)Short TO PORT (J1-J8)Short	AC1500V 1.5mA 60SEC
	(P1-P12 And Shield)Short TO PORT (J1-J8)Short	DC2250V 1.5mA 60SEC

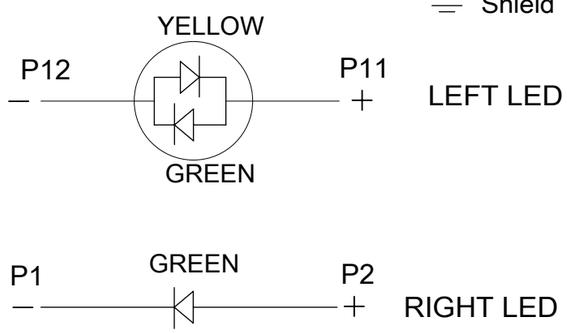

LED ELECTRICAL SPECIFICATION

PARAMETER	YELLOW/GREEN		GREEN		UNITS	TEST CONDITIONS
POWER DISSIPATION	60		60		mW	
REVERSE VOLTAGE	5		5		V	
PEAK WAVELENGTH	585~597/564.5~576.5		564.5~576.5		nm	IF=20mA
FORWARD VOLTAGE	2.1	MAX.=2.5	2.2	MAX.=2.5	V	IF=20mA

LED SCHEMATIC:

THIS DRAWING CONTAINS INFORMATION THAT IS PROPRIETARY TO MOLEX ELECTRONIC TECHNOLOGIES, LLC AND SHOULD NOT BE USED WITHOUT WRITTEN PERMISSION

EC NO: 762427 2018/08/20
DRWN: ME 2023/09/25
CHK'D: RLI09 2023/09/25
APPR: RLI09

REV: B

GENERAL TOLERANCES (UNLESS SPECIFIED)
ANGULAR TOL ± 3.0 °
4 PLACES ±
3 PLACES ±
2 PLACES ± 0.25
1 PLACE ± 0.25
0 PLACES ±
DRAFT WHERE APPLICABLE MUST REMAIN WITHIN DIMENSIONS

DIMENSION UNITS: mm
SCALE:
DRWN BY: FYANG05 DATE: 2014/09/23
CHK'D BY: DATE:
APPR BY: RZHANG DATE: 2015/03/12
DRAWING SIZE: A3
THIRD ANGLE PROJECTION

molex®

IMPROVED MODULAR JACK
INTERGRATED MAGNETICS SMT,LED

PRODUCT CUSTOMER DRAWING

SERIES	MATERIAL NUMBER	CUSTOMER
48074	480749103	GENERAL MARKET

DOCUMENT NUMBER	DOC TYPE	DOC PART	SHEET NUMBER
SD-48074-103	PSD	001	2 OF 2

RELEASE STATUS	P1	RELEASE DATE	2023/09/25 08:22:18

FORMAT: molex-tb.nyyd.A3
DATE: 2013/12/14

Downloaded from Arrow.com.