Series 93 Gaskets

For AS50151 and MIL-DTL-22992 Class C, J, R

930-004 Flange Gasket

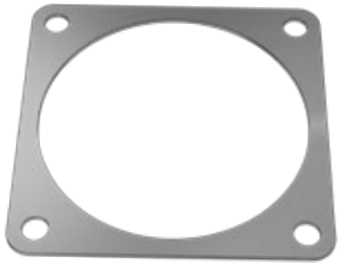

930-004 flange gaskets fit AS50151 and MIL-DTL-22992 Series C, J and R square flange connectors. Available in a variety of materials, these gaskets provide environmental protection and EMI shielding.

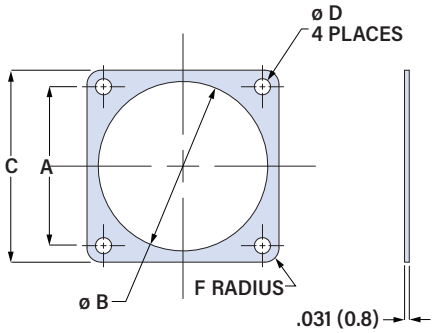

TABLE 1 MATERIAL CODE

	EMI Gaskets
B	**Fluorosilicone with Silver-Plated Aluminum Filler** MIL-G-83528 Type D, CHO-SEAL 1298, 90 dB shielding @ 10GHz, good corrosion resistance, resists jet fuels and solvents, -55 to +200 °C, tan
C	**Silicone with Embedded Monel Wire Mesh** Corrosion-resistant QQ-N-281 nickel-copper alloy wire embedded in silicone, good EMI shielding, -55 to +260 °C, grey
K	**Silicone with Oriented Monel Wire** QQ-N-281 nickel-copper alloy wire embedded into the z-axis, good EMI shielding, -55 to +200 °C, grey
M	**Silicone with Silver-Plated Glass Filler** MIL-G-83528 Type M, 100 dB shielding @ 10GHz, fair corrosion resistance, -55 to +200 °C, tan

	Non-Conductive Gaskets
F	Fluorosilicone (blue)
N	Neoprene (black)
R	Nitrile (black)
S	Silicone (red)
V	Viton (black)

AS50151 (MIL-DTL-5015)

Shell Size	Part No. ✳ = *Material Code*	A ± .010 (0.3) in	A mm	øB + .016 (0.2) -.000 0.0) in	øB mm	C + .016 (0.2) -.000 0.0) in	C mm	øD ± .010 (0.3) in	øD mm	F Rad in	F Rad mm
8S	930-004✳01	.594	15.1	.500	12.7	.875	22.2	.172	4.4	.141	3.6
10S, 10SL	930-004✳02	.719	18.3	.625	15.9	1.000	25.4	.172	4.4	.141	3.6
12, 12S	930-004✳03	.812	20.6	.750	19.1	1.094	27.8	.172	4.4	.141	3.6
14, 14S	930-004✳04	.906	23.0	.875	22.2	1.188	30.2	.172	4.4	.141	3.6
16, 16S	930-004✳05	.969	24.6	1.000	25.4	1.281	32.5	.172	4.4	.156	4.0
18	930-004✳06	1.062	27.0	1.125	28.6	1.375	34.9	.203	5.2	.156	4.0
20	930-004✳07	1.156	29.4	1.250	31.8	1.500	38.1	.203	5.2	.172	4.4
22	930-004✳08	1.250	31.8	1.375	34.9	1.625	41.3	.203	5.2	.188	4.8
24	930-004✳09	1.375	34.9	1.500	38.1	1.750	44.5	.203	5.2	.188	4.8
28	930-004✳10	1.562	39.7	1.750	44.5	2.000	50.8	.203	5.2	.219	5.6
32	930-004✳12	1.750	44.5	2.000	50.8	2.250	57.2	.219	5.6	.250	6.4
36	930-004✳13	1.938	49.2	2.188	55.6	2.500	63.5	.219	5.6	.281	7.1
40	930-004✳14	2.188	55.6	2.438	61.9	2.750	69.9	.219	5.6	.281	7.1
44	930-004✳16	2.375	60.3	2.688	68.3	3.000	76.2	.219	5.6	.312	7.9
48	930-004✳17	2.625	66.7	2.938	74.6	3.250	82.6	.219	5.6	.312	7.9

MIL-DTL-22992 CLASS C, J, R

Shell Size	Part No. ✳ = *Material Code*	A ± .010 (0.3) in	A mm	øB + .016 (0.2) -.000 0.0) in	øB mm	C + .016 (0.2) -.000 0.0) in	C mm	øD ± .010 (0.3) in	øD mm	F Rad in	F Rad mm
12	930-004✳04	.906	23.0	.875	22.2	1.188	30.2	.172	4.4	.141	3.6
14	930-004✳05	.969	24.6	1.000	25.4	1.281	32.5	.172	4.4	.156	4.0
16	930-004✳06	1.062	27.0	1.125	28.6	1.375	34.9	.203	5.2	.156	4.0
18	930-004✳07	1.156	29.4	1.250	31.8	1.500	38.1	.203	5.2	.172	4.4
20	930-004✳08	1.250	31.8	1.375	34.9	1.625	41.3	.203	5.2	.188	4.8
22	930-004✳09	1.375	34.9	1.500	38.1	1.750	44.5	.203	5.2	.188	4.8
24	930-004✳10	1.562	39.7	1.750	44.5	2.000	50.8	.203	5.2	.219	5.6
28	930-004✳12	1.750	44.5	2.000	50.8	2.250	57.2	.219	5.6	.250	6.4
32	930-004✳13	1.938	49.2	2.188	55.6	2.500	63.5	.219	5.6	.281	7.1
36	930-004✳14	2.188	55.6	2.438	61.9	2.750	69.9	.219	5.6	.281	7.1

Downloaded from Arrow.com.