THIS DRAWING IS UNPUBLISHED. RELEASED FOR PUBLICATION 20
© COPYRIGHT20 BY - ALL RIGHTS RESERVED.

LOC	DIST
AP	-

creo
Creo Parametric 3.0
DO NOT REVISE EXCEPT BY CAD

REVISIONS

P	LTR	DESCRIPTION	DATE	DWN	APVD
	G4	REDRAW AND REVISED ECO 13-015672	09OCT2013	HC	WLS
	G5	REV. BY ECO 15-014754	17FEB2016	HC	WLS
	G6	REVISED DRAWING ECO-17-008021	05JUN2017	NCL	DAO

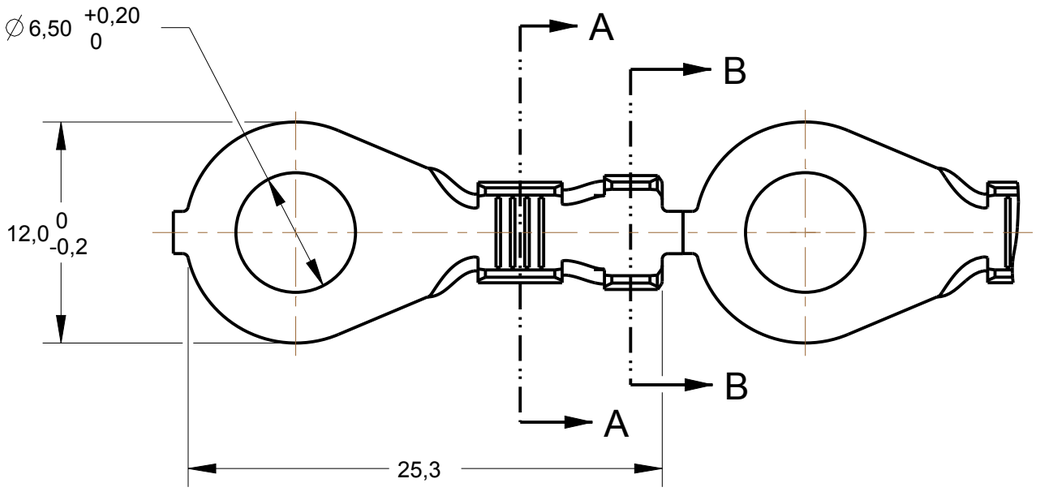

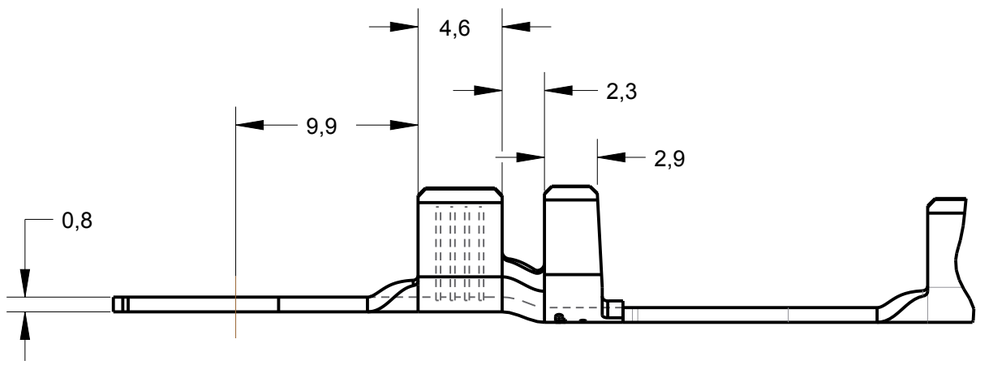

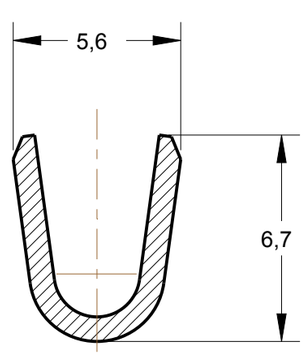

SECTION A-A
SCALE 5:1

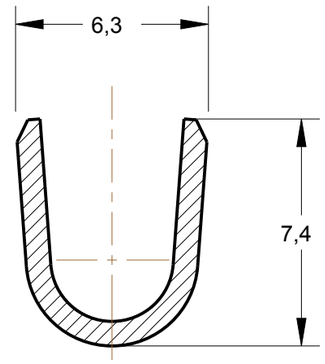

SECTION B-B
SCALE 5:1

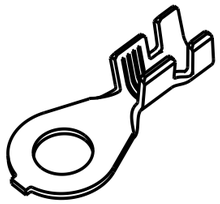

PERSPECTIVE VIEW
SCALE 3:2

1 - BOBINAR COM PAPEL INTERCALADO

- REELING WITHPAPER INTERLEAVE

626037-5
626037-6

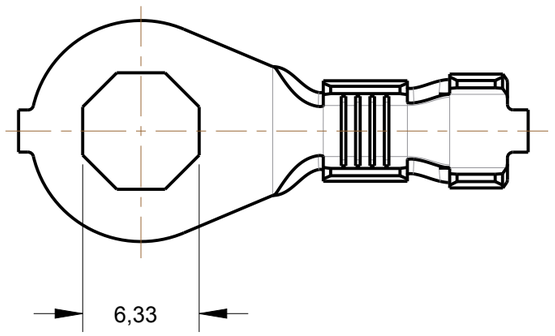

	IDW	WDW	INSUL.RANGE	WIRE RANGE	FINISH	MATERIAL	PART NO
	16,26	14,22	∅ 3,2-5,3mm	4,0-6,0mm²	PÓS ESTANHADO/ ELECTRO TIN PLATED	MAKE FROM 626037-5	626037-6 1
					PLAIN	LATÃO / BRASS	626037-5 1
OBSOLETE					~~PÓS ESTANHADO/ ELECTRO TIN PLATED~~	~~LATÃO / BRASS~~	~~626037-4 1~~
					——	BRONZE FOSFOROSO/PHOSP.BRONZE	626037-3
					PÓS ESTANHADO/ ELECTRO TIN PLATED	LATÃO / BRASS	626037-2 1
					——	LATÃO / BRASS	626037-1 1

THIS DRAWING IS A CONTROLLED DOCUMENT.

DIMENSIONS: mm

TOLERANCES UNLESS OTHERWISE SPECIFIED:
0 PLC ±-
1 PLC ±0,3
2 PLC ±-
3 PLC ±-
4 PLC ±-
ANGLES ±1°

MATERIAL SEE TABLE
FINISH SEE TABLE

DWN H.CANTERI 08DEC2013
CHK W.L.STEFANI 08DEC2013
APVD -
PRODUCT SPEC -
APPLICATION SPEC -
WEIGHT -

TE Connectivity

NAME - RING TONGUE -

SIZE	CAGE CODE	DRAWING NO	RESTRICTED TO
A3	00779	C-626037	-

Customer Drawing
SCALE 2:1 SHEET 1 OF 1 REV G6

1470-19 (3/11)

Downloaded from Arrow.com.