TRACO POWER

AC/DC Industrial Power Supply

TXO 45 Series, 45 Watt

- **Compact open frame power supply with pin connectors**
- **Universal input range 85 to 264 VAC**
- **Convection cooled (no-fan)**
- **Operating temperature range: -20°C to +70°C**
- **Internal EN55032 class B filter**
- **Short circuit, overvoltage and overload protection**
- **IEC/EN/UL 62368-1 safety approvals**
- **Compliance to EN 61000-3-2**
- **3-year product warranty**

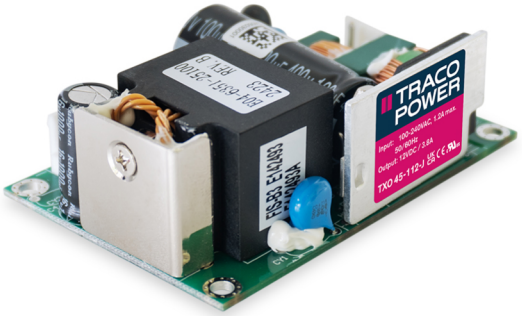

UL 62368-1 IEC 62368-1

The TXO 45 is a compact 45 Watt AC/DC open frame module with reinforced I/O isolation designed for a wide range of cost sensitive applications. Excellent temperature behaviour allows full load operation from -20°C to +50°C while going up to +70°C with derating. The TXO 45 series features short circuit protection, over current limitation and overvoltage protection and complies with European EMC standards and the Low Voltage Directive (LVD).

Models

Order Code	Output Power max.	Output Voltage nom.	Output Current max.	Efficiency typ.
TXO 45-112-J	45 W	12 VDC	3'800 mA	85 %
TXO 45-115-J		15 VDC	3'000 mA	85 %
TXO 45-124-J		24 VDC	1'900 mA	85 %
TXO 45-148-J		48 VDC	940 mA	85 %

Options

TCI 130-DC	- Optional Cable: www.tracopower.com/overview/tci130-dc
TCI-AC1	- Optional Cable: www.tracopower.com/overview/tci-ac1
on demand (backorder with MOQ non stocking item)	- Optional model with 36 VDC and 1'250 mA - Optional model with 56 VDC and 800 mA

Downloaded from Arrow.com.

Input Specifications

Input Voltage	- AC Range	Operational Range:	85 - 264 VAC (Full Range)
		Rated Range:	100 - 240 VAC (Full Range)
	- DC Range	Operational Range:	120 - 370 VDC (Designed for, no certification)
		Polarity:	irrelevant
Input Frequency		Operational Range:	47 - 63 Hz
		Certified:	50/60 Hz
Power Consumption	- No load & Vin = 230 VAC		100 mW max. (Ready to meet ErP directive)
	- No load & Vin = 115 VAC		100 mW max.
Input Current	- Full load & Vin = 230 VAC		600 mA max.
	- Full load & Vin = 115 VAC		950 mA max.
Input Inrush Current	- At 230 VAC		80 A max.
	- At 115 VAC		40 A max.
Input Protection			T 3.15 A / 250 VAC (Internal Fuse in L)
Recommended Input Fuse			3'150 mA (slow blow) (The need of an external fuse has to be assessed in the final application.)

Output Specifications

Voltage Set Accuracy			±2% max.
Regulation	- Input Variation (Vmin - Vmax)		0.5% max.
	- Load Variation (10 - 100%)		3% max.
Ripple and Noise (20 MHz Bandwidth)		12 VDC model:	120 mVp-p typ. (w/ 10 µF Alu || 0.1 µF MLCC)
		15 VDC model:	150 mVp-p typ. (w/ 10 µF Alu || 0.1 µF MLCC)
		24 VDC model:	240 mVp-p typ. (w/ 10 µF Alu || 0.1 µF MLCC)
		36 VDC model:	360 mVp-p typ. (w/ 10 µF Alu || 0.1 µF MLCC)
		48 VDC model:	480 mVp-p typ. (w/ 10 µF Alu || 0.1 µF MLCC)
		56 VDC model:	560 mVp-p typ. (w/ 10 µF Alu || 0.1 µF MLCC)
Capacitive Load		12 VDC model:	3'500 µF max.
		15 VDC model:	2'500 µF max.
		24 VDC model:	1'350 µF max.
		36 VDC model:	800 µF max.
		48 VDC model:	380 µF max.
		56 VDC model:	270 µF max.
Minimum Load			Not required
Temperature Coefficient			±0.05 %/K max.
Hold-up Time	- At 230 VAC		60 ms min.
	- At 115 VAC		16 ms min.
Start-up Time	- At 230 VAC		1.5 s max.
	- At 115 VAC		3 s max.
Short Circuit Protection			Continuous, Automatic recovery
Output Current Limitation			110 - 200% of Iout max.
Overvoltage Protection			110 - 170% of Vout nom. (Latch mode)
Transient Response	- Response Deviation		3% typ. / 5% max. (50% to 75% Load Step)
	- Response Time		1 ms typ. / 1.5 ms max. (50% to 75% Load Step)

Safety Specifications

Standards	- IT / Multimedia Equipment		EN 62368-1 IEC 62368-1 UL 62368-1
	- Certification Documents		www.tracopower.com/txo45-safety-cert
Protection Class			Class I & II (Prepared): Reinforced Insulation
		See application note:	www.tracopower.com/overview/txo45
Energy Source	- Output, acc. to 62368-1		ES1

All specifications valid at 230 VAC, resistive full load and +25°C after warm-up time, unless otherwise stated.

Downloaded from Arrow.com.

Power Source	- Output, acc. to 62368-1	PS3
Pollution Degree		PD 2
Over Voltage Category		OVC II

EMC Specifications

EMI (Emissions)	- Conducted Emissions		EN 55032 class A (internal filter)
			EN 55032 class B (internal filter)
			FCC 47 Part 15 class A (internal filter)
			FCC 47 Part 15 class B (internal filter)
	- Radiated Emissions		EN 55032 class A (internal filter)
			EN 55032 class B (internal filter)
			FCC 47 Part 15 class A (internal filter)
			FCC 47 Part 15 class B (internal filter)
	- Harmonic Current Emissions		EN 61000-3-2, class A
	- Voltage Fluctuations & Flicker		EN 61000-3-3
EMS (Immunity)			EN 55035 (Multimedia)
	- Electrostatic Discharge	Air:	EN 61000-4-2, ±8 kV, perf. criteria A
		Contact:	EN 61000-4-2, ±4 kV, perf. criteria A
	- RF Electromagnetic Field		EN 61000-4-3, 3 V/m, perf. criteria A
	- EFT (Burst) / Surge		EN 61000-4-4, ±1 kV, perf. criteria A
		L to L:	EN 61000-4-5, ±1 kV, perf. criteria A
	- Conducted RF Disturbances		EN 61000-4-6, 3 Vrms, perf. criteria A
	- PF Magnetic Field	Continuous:	EN 61000-4-8, 1 A/m, perf. criteria A
	- Voltage Dips & Interruptions	230 VAC / 50 Hz:	EN 61000-4-11
			30%, 25 periods, perf. criteria A
			>95%, 0.5 periods, perf. criteria A
			>95%, 250 periods, perf. criteria B
EMC / Environmental	- Certification Documents		www.tracopower.com/txo45-emc-cert

General Specifications

Relative Humidity			95% max. (non condensing)
Temperature Ranges	- Operating Temperature		−20°C to +70°C
	- Approved Ambient Temp.	62368-1:	+70°C max. (for 50% load)
		62368-1:	+50°C max. (for 100% load)
	- Storage Temperature		−40°C to +85°C
Power Derating	- High Temperature		2.5 %/K above 50°C
	- Low Input Voltage		2.0 %/V below 90 VAC
		See application note:	www.tracopower.com/txo45-cc
Cooling System			Natural convection (20 LFM)
Altitude During Operation			2'000 m max.
Regulator Topology			Flyback Converter
Switching Frequency			65 kHz typ. (PWM)
Insulation System			Reinforced Insulation
Working Voltage (rated)			576 VAC
Isolation Test Voltage	- Input to Output, 60 s		3'000 VAC (4'242 VDC)
Creepage	- Input to Output		6 mm min.
Clearance	- Input to Output		6 mm min.
Isolation Resistance	- Input to Output, 500 VDC		100 MΩ min.
Leakage Current (at 264 VAC / 60 Hz)	- Touch Current		100 µA max.
Reliability	- Calculated MTBF		100'000 h (MIL-HDBK-217F, ground benign)
Washing Process			Not allowed
Environment	- Vibration		2.4 g, 3 axis, random waveform, 30 min
	- Mechanical Shock		20 g, 3 axis, 6 shocks
Housing Type			Open Frame
Mounting Type			Chassis Mount

All specifications valid at 230 VAC, resistive full load and +25°C after warm-up time, unless otherwise stated.

Downloaded from Arrow.com.

Connection Type		Pin Connector
Weight		120 g
Environmental Compliance	- REACH Declaration	www.tracopower.com/info/reach-declaration.pdf
		REACH SVHC list compliant REACH Annex XVII compliant
	- RoHS Declaration	www.tracopower.com/info/rohs-declaration.pdf
		Exemptions: 7(a) (RoHS exemptions refer to the component concentration only, not to the overall concentration in the product (O5A rule).)
	- SCIP Reference Number	dae5192c-c3bb-43f9-bd6f-69b1ebc6e6e6

Additional Information

Supporting Documents	www.tracopower.com/overview/txo45
Frequently Asked Questions	www.tracopower.com/glossary-faq
Glossary	www.tracopower.com/info/glossary.pdf
Service Portal	www.tracoserviceportal.com

Outline Dimensions

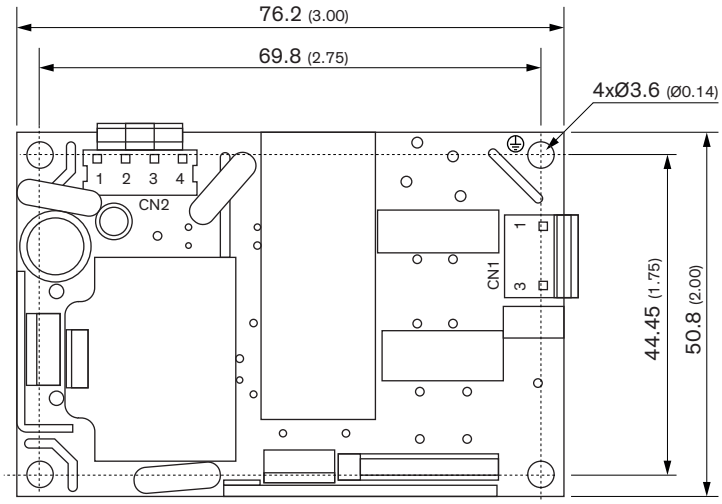

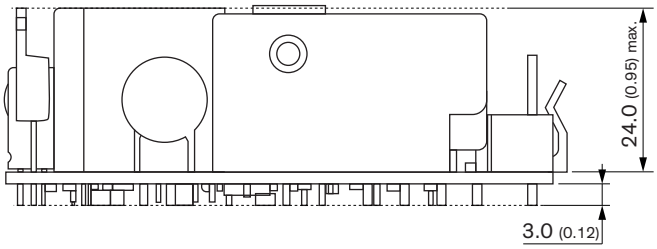

Dimensions in mm (inch)
General tolerances: ±0.5 (±0.02)
Mounting screw tightening torque: 0.59 Nm max. (6.0 kgfcm max.)

Pin connectors

Input (CN1)		Output (CN2)	
Pin	**Function**	**Pin**	**Function**
1	AC (N)	**1**	–Vout
3	AC (L)	**2**	
		3	+Vout
		4	

Input: JST series, B3P-VH(LF)(SN), 3.96mm
mates with JST crimp terminal: SVH-21T-P1.1 or equivalent
and terminal housing: VHR-3N or equivalent

Output: JST series, B4P-VH(LF)(SN), 3.96mm
mates with JST crimp terminal: SVH-21T-P1.1 or equivalent
and terminal housing: VHR-4N or equivalent

© Copyright 2026 Traco Electronic AG

Downloaded from Arrow.com.