# 1393590 -5 Product Details

Live Product Chat

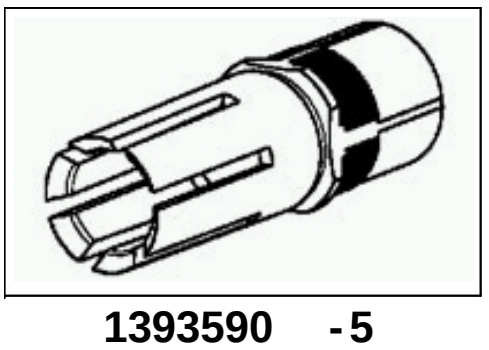

**1393590 -5**
(V23648A62B4)
TE Part Number: 1393590 -5
Active

Add to Part List

## Special Coaxial Contacts

Always EU RoHS/ELV Compliant ( Statement of Compliance )

**Product Highlights:**

- High Current Inserts
- Jack
- Contact Type = Standard
- Current Rating = 25 Amps.
- Used With DIN 41612 M Female Connectors

View all Features | Find Similar Products

**Quick Links**

Check Pricing & Availability
Search for Tooling
Product Feature Selector
Contact Us About This Product
Request Samples NEW!

## Documentation & Additional Information

**Product Drawings:**
- High current socket with PCB connection (PDF, English)

**Catalog Pages/Data Sheets:**
- COMMUNICATION PRODUCTS ADDENDUM (PDF, English)

**Product Specifications:**
- None Available

**Application Specifications:**
- None Available

**Instruction Sheets:**
- None Available

**CAD Files:**
- None Available

List all Documents

**Additional Information:**
- Product Line Information

**Additional Product Images:**
- Schematic

**Related Products:**
- Tooling

## Product Features (Please use the Product Drawing for all design activity)

**Product Type Features:**
- Product Type = High Current Inserts
- Gender = Jack
- Body Style = Straight

**Electrical Characteristics:**
- Current Rating (Amps.) = 25

**Body Related Features:**
- Used With = DIN 41612 M Female Connectors

**Contact Related Features:**
- Contact Type = Standard

**Industry Standards:**
- RoHS/ELV Compliance = RoHS compliant, ELV compliant
- Lead Free Solder Processes = Wave solder capable to 240°C, Wave solder capable to 260°C, Wave solder capable to 265°C
- RoHS/ELV Compliance History = Always was RoHS compliant

**Conditions for Usage:**
- Terminate To = Printed Circuit Board

**Packaging Related Features:**
- Packaging Quantity = 100

**Other:**
- Brand = AMP


© 2008 Tyco Electronics Corporation All Rights Reserved

Downloaded from Arrow.com.