TRACO POWER

AC/DC Power Supply

TXLN 150 Series, 150 Watt

Not recommended for new designs

- **Compact metal case with screw terminal block**
- **Universal input 85-264 VAC**
- **Convection cooled (no fan)**
- **High efficiency up to 90%**
- **Active PFC >0.95**
- **Compliance to EN 61000-3-2**
- **Short circuit, overvoltage and overload protection**
- **IEC/EN/UL 62368-1 safety approvals**
- **3-year product warranty**



UL 62368-1 IEC 62368-1

The TXLN series is a family of encased power supplies designed for a wide range of cost critical applications. With a low profile metal case and screw terminal block connection, they are easy to install in any equipment. These power supplies have universal input and comply with European EMC standards and the Low Voltage Directive (LVD).

Models

Order Code	Output Power max.	Output Voltage nom. (adjustable)	Output Current max.	Efficiency typ.
TXLN 150-105 *	150 W	5 VDC (4.5 - 5.5 VDC)	30'000 mA	86 %
TXLN 150-112 *		12 VDC (10.8 - 13.2 VDC)	12'500 mA	88 %
TXLN 150-124 *		24 VDC (21.6 - 26.4 VDC)	6'300 mA	89 %
TXLN 150-148 *		48 VDC (43.2 - 52.8 VDC)	3'200 mA	90 %

Note * Not recommended for new designs

Downloaded from Arrow.com.

Input Specifications

Input Voltage	- AC Range	Operational Range:	85 - 264 VAC (Full Range)
		Rated Range:	100 - 240 VAC (Full Range)
	- DC Range	Operational Range:	120 - 375 VDC (Designed for, no certification)
		Polarity:	irrelevant
Input Frequency		Operational Range:	47 - 63 Hz
		Certified:	50/60 Hz
Input Current	- Full load & Vin = 115 VAC		2'200 mA max.
Input Inrush Current	- At 230 VAC		45 A max.
	- At 115 VAC		25 A max.
Power Factor	- At 230 VAC		0.95 min. (Active Power Factor Correction)
	- At 115 VAC		0.95 min. (Active Power Factor Correction)
Input Protection			T 3.15 A / 250 VAC (Internal Fuse)
Recommended Input Fuse			3'150 mA (slow blow) (The need of an external fuse has to be assessed in the final application.)

Output Specifications

Output Voltage Adjustment			±10% (By trim potentiometer) Output power must not exceed rated power!
Voltage Set Accuracy			±2% max. (5 Vout model) ±1% max. (other models)
Regulation	- Input Variation (Vmin - Vmax)		2% max. (5 Vout model) 1% max. (other models)
	- Load Variation (0 - 100%)		2% max. (5 Vout model) 1% max. (other models)
Ripple and Noise (20 MHz Bandwidth)		5 VDC model:	100 mVp-p max. (w/ 0.1 µF || 47 µF)
		12 VDC model:	100 mVp-p max. (w/ 0.1 µF || 47 µF)
		24 VDC model:	150 mVp-p max. (w/ 0.1 µF || 47 µF)
		48 VDC model:	200 mVp-p max. (w/ 0.1 µF || 47 µF)
Capacitive Load			108'000 µF max.
Minimum Load			Not required
Temperature Coefficient			±0.03 %/K max.
Hold-up Time	- At 230 VAC		16 ms min.
	- At 115 VAC		16 ms min.
Start-up Time	- At 230 VAC		2'500 ms max.
	- At 115 VAC		2'500 ms max.
Short Circuit Protection			Continuous, Automatic recovery
Output Current Limitation			105 - 150% of Iout max.
Overvoltage Protection			115 - 140% of Vout nom.

Safety Specifications

Standards	- IT / Multimedia Equipment		EN 62368-1 IEC 62368-1 UL 62368-1
	- Certification Documents		www.tracopower.com/txln150-safety-cert/
Protection Class			Class I (Prepared): Connection to PE
		See application note:	www.tracopower.com/info/protection-class.pdf
Energy Source	- Output, acc. to 62368-1		ES1
Power Source	- Output, acc. to 62368-1		PS3
Pollution Degree			PD 2
Over Voltage Category			OVC II

All specifications valid at 230 VAC, resistive full load and +25°C after warm-up time, unless otherwise stated.

Downloaded from Arrow.com.

EMC Specifications

EMI (Emissions)	- Conducted Emissions		EN 55032 class A (internal filter)
			EN 55032 class B (internal filter)
	- Radiated Emissions		EN 55032 class A (internal filter)
			EN 55032 class B (internal filter)
	- Harmonic Current Emissions		EN 61000-3-2, class D
	- Voltage Fluctuations & Flicker		EN 61000-3-3
EMS (Immunity)			EN 55024 (IT Equipment)
			EN 55035 (Multimedia)
	- Electrostatic Discharge	Air:	EN 61000-4-2, ±8 kV, perf. criteria A
		Contact:	EN 61000-4-2, ±4 kV, perf. criteria A
	- RF Electromagnetic Field		EN 61000-4-3, 3 V/m, perf. criteria A
	- EFT (Burst) / Surge		EN 61000-4-4, ±1 kV, perf. criteria A
		L to L:	EN 61000-4-5, ±1 kV, perf. criteria A
		L to PE:	EN 61000-4-5, ±2 kV, perf. criteria A
	- Conducted RF Disturbances		EN 61000-4-6, 3 Vrms, perf. criteria A
	- PF Magnetic Field	Continuous:	EN 61000-4-8, 3 A/m, perf. criteria A
	- Voltage Dips & Interruptions	230 VAC / 50 Hz:	EN 61000-4-11
			30%, 25 periods, perf. criteria A
			>95%, 0.5 periods, perf. criteria A
			>95%, 250 periods, perf. criteria B

General Specifications

Relative Humidity			90% max. (non condensing)
Temperature Ranges	- Operating Temperature		–30°C to +70°C
	- Storage Temperature		–40°C to +85°C
Power Derating	- High Temperature		2.5 %/K above 50°C
	- Low Input Voltage		0.66 %/V below 100 VAC
		See application note:	www.tracopower.com/txln150-cc/
Over Temperature Protection Switch Off	- Protection Mode		Automatic recovery
Cooling System			Natural convection (20 LFM)
Remote Control	- Voltage Controlled Remote (passive = on)		On: 0 to 0.8 VDC Off: 4 to 10 VDC Refers to '+Remote' and '-Remote' Pin
Altitude During Operation			5'000 m max.
Regulator Topology			Flyback Converter
Switching Frequency			61 - 69 kHz (PWM)
Insulation System			Reinforced Insulation
Isolation Test Voltage	- Input to Output, 60 s		3'000 VAC
	- Input to Case or PE, 60 s		1'800 VAC
	- Output to Case or PE, 60 s		500 VAC
Isolation Resistance	- Input to Output, 500 VDC		100 MΩ min.
Isolation Capacitance	- Input to Output, 100 kHz, 1 V		4'700 pF max.
Leakage Current (at 264 VAC / 60Hz)	- Earth Leakage Current		1500 µA max.
Distance Through Isolation			6 mm
Reliability	- Calculated MTBF		162'800 h (MIL-HDBK-217F, ground benign)
Housing Material			Aluminum
Housing Type			Metal Case
Mounting Type			Chassis Mount
Connection Type			Screw Terminal
Weight			560 g
Status Indicator			Indicated by green LED

All specifications valid at 230 VAC, resistive full load and +25°C after warm-up time, unless otherwise stated.

Downloaded from Arrow.com.

Environmental Compliance	- REACH Declaration	www.tracopower.com/info/reach-declaration.pdf REACH SVHC list compliant REACH Annex XVII compliant
	- RoHS Declaration	www.tracopower.com/info/rohs-declaration.pdf Exemptions: 7(a), 7(c)-I (RoHS exemptions refer to the component concentration only, not to the overall concentration in the product (O5A rule).)
	- SCIP Reference Number	2cb93a6f-36c4-44b1-a10a-7f8551bc007a

Additional Information

Supporting Documents	www.tracopower.com/overview/txln150
Frequently Asked Questions	www.tracopower.com/glossary-faq
Glossary	www.tracopower.com/info/glossary.pdf
Service Portal	www.tracoserviceportal.com

Outline Dimensions

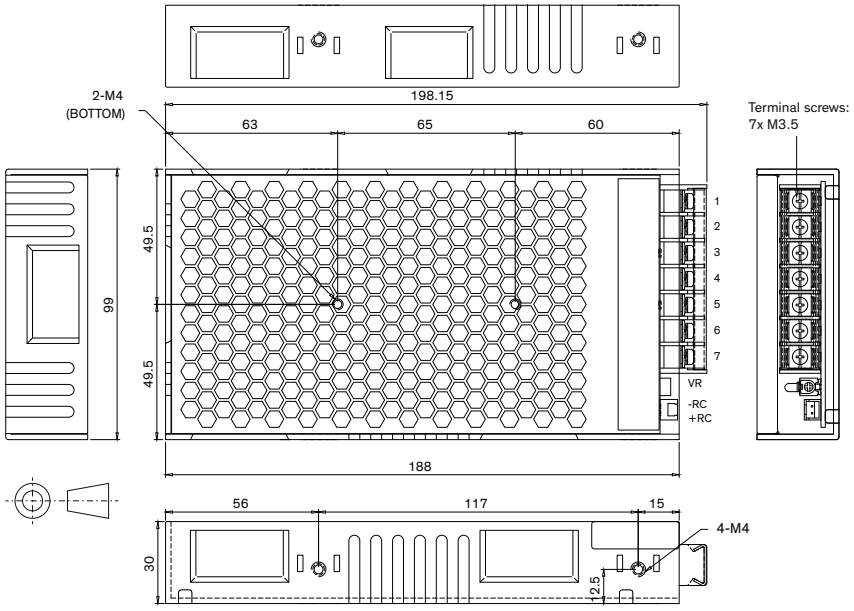

Dimensions in mm
Tolerances:
0-8: ±0.2
8-25: ±0.3
25-80: ±0.5
80-250: ±0.8

Mounting screws
Max. screw penetration depth: 4.0
Max. screw locked torque: 0.8 Nm

Screw Terminal	
Pin	**Function**
1	AC (L)
2	AC (N)
3	PE
4-5	–Vout
6-7	+Vout

Max. Terminal srew locked torque: 0.7 Nm

JTS Connector	
Pin	**Function**
1	+Remote
2	–Remote

JST Housing Type:
JST B-XH

JST Mating Housing:
JST XHP

JST Crimp Contact:
JST SXH-001T

All specifications valid at 230 VAC, resistive full load and +25°C after warm-up time, unless otherwise stated.

Downloaded from Arrow.com.

Mounting Bracket (included)

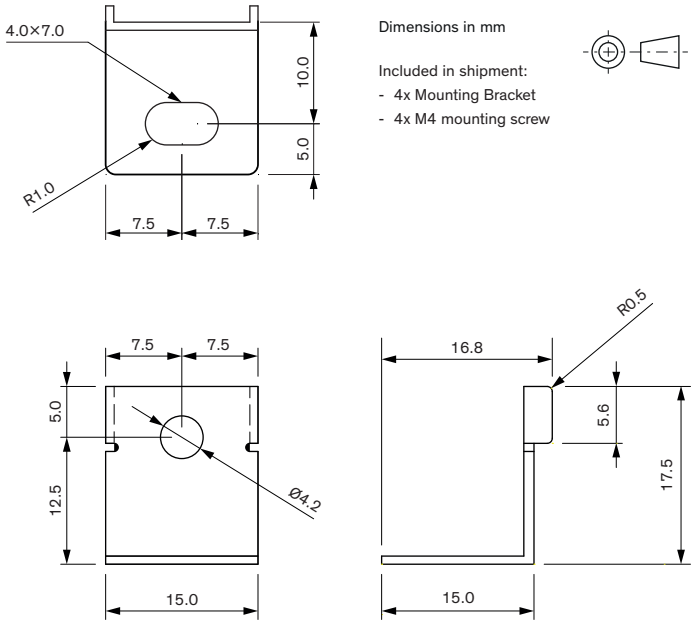

Dimensions in mm

Included in shipment:
- 4x Mounting Bracket
- 4x M4 mounting screw

© Copyright 2026 Traco Electronic AG

Downloaded from Arrow.com.