Bluetooth® low energy module

Bluetooth® 5.0 low energy

ES2832AA1
ES2832AA2

Data Sheet

By purchase of any products described in this document, the customer is deemed to understand and accept contents of this document.

The ***Bluetooth***® word mark and logos are owned by the ***Bluetooth*** SIG, Inc. and any use of such marks by KAGA FEI Co., Ltd. is under license.

Copyright 2025 KAGA FEI Co., Ltd.

Downloaded from Arrow.com.

Contents

1. Document constituent list **3**
2. General Items **4**
2.1. Scope 4
2.2. Description 4
3. Absolute maximum ratings **16**
4. Electrical characteristics **17**
4.1. Recommendation operating range 17
4.2. DC Specifications 17
4.3. RF Specifications 18
5. Circuit Schematic **19**
5.1. Block Diagram 19
5.2. Sample circuits 20
5.3. Reference Circuits 21
6. Outline/Appearance **22**
7. Pin Layout **23**
8. Handling Precaution **24**
8.1. Environment conditions for use and storage 24
8.2. Conditions for handling of products 24
9. Packaging Specification **26**
9.1. Packaging Specification 26
9.2. Tape specification 27
9.3. Reel specification 28
9.4. Taping performance 29
10. Antenna application note **30**
10.1. Recommended module mounting example 30
10.2. Other module mounting examples 31
10.3. Placement of resin or plastic parts 31
10.4. Directional characteristics example (when mounted on evaluation board) 32
About this Application Note 32
11. Design guide **33**
11.1. Power Up Sequence 33
11.2. Recommended Power Circuit 33
11.3. Battery operation 33
11.4. Pattern Design Guide 33
11.4.1. Power Supply System 33
11.4.2. Bypass Capacitor Layout 33
11.4.3. GND Pattern 33
11.5. Reference information 34
12. Notes **35**
Precautions **36**

Copyright 2025 KAGA FEI Co., Ltd.

Downloaded from Arrow.com.

1.Document constituent list

Control name	Control No.	Document Page
General Items	KM-AG-A223002	1/12 - 12/12
Absolute maximum ratings	KM-AM-A223002	1/1
Electrical characteristics	KM-AE-A223002	1/2 - 2/2
Circuit schematic	KM-MC-A223002	1/3 - 3/3
Outline / Appearance	KM-AD-A223002	1/1
Pin Layout	KM-BA-A223002	1/1
Handling Precaution	MQ-H-001	1/2 - 2/2
Packaging Specification	KM-BB-A223002	1/4 - 4/4
Antenna application note	-	1/3 - 3/3
Design guide	-	1/2 - 2/2
Notes	-	1/1
Precautions	MQ-P-001	1/1

Revision History
07-Aug. 2023 > Ver.1.0 Release
13-Mar. 2024 > Ver.1.1 Update
29-Jul. 2025 > Ver.1.2 Update

Copyright 2025 KAGA FEI Co., Ltd.

Downloaded from Arrow.com.

2.General Items

2.1.Scope

This specification (“Specification”) applies to the hybrid IC “ES2832AA1” and ”ES2832AA2”, ***Bluetooth***® 5.0 low energy modules (“Product”) manufactured by KAGA FEI Co., Ltd. (“KAGA FEI”)

2.2.Description

a) User Code : ES2832AA1…nRF52832-QFAA-R
ES2832AA2…nRF52832-QFAA-G-R
MODEL : ES2832
*User Code may be changed for mass production or other cases.
Note: Please use the Part Number (ES2832AA1, ES2832AA2) to order this product

The ES2832AA1 and ES2832AA2 have only different Nordic chip revisions and have different memory access methods for debugging, program writing and so on.
Please refer to the following documents for more details.
・Firmware Writing Manual

b) Chip : Nordic nRF52832 (512KB Flash, 64KB RAM)

c) Function : Radio frequency transceiver Module. Bluetooth®5.0 conformity.

d) Application : IoT devices, Health & Fitness Equipment, Sensor, Toys

e) Structure : Hybrid IC loaded with silicon monolithic semiconductor
Regarding the containment of hazardous substance in this Product, it conforms to RoHS Directive.

f) Outline : 3.25 x 8.55 x 0.85 mm
28-pin Land Grid Array

g) Marking : Part Number, Lot Number, and manufacturer on Shielding

h) Country of origin : Japan or Thailand

i) Packaging : Packaging method: Tape & reel + aluminum moisture barrier bag
Packaging unit: 2000
* The samples may have different packing specification.

Copyright 2025 KAGA FEI Co., Ltd.

Downloaded from Arrow.com.

j) Notes:

a. Limitation of Warranty

1) KAGA FEI provides warranties only if the Product is operated under the condition set forth in this Specification. Please note that KAGA FEI shall not be liable for any defect and/or malfunction arising from use of the Product under the terms and conditions other than the operating conditions hereof. In addition, when this Product is used under environmental conditions such as over voltage which is not guaranteed, it may be destroyed in short mode. To ensure the security of customer's product, please add an extra fuse or/and a protection circuit for over voltage.
2) This Product is designed for use in products which comply with Bluetooth® Specifications. KAGA FEI disclaims and is not responsible for any liability concerning infringement by this Product under any intellectual property right owned by third party in case the customer uses this Product in any product which does not comply with Bluetooth® Specifications (the "non-complying products"). Furthermore, KAGA FEI warrants only that this Product complies with this Specification and does not grant any other warranty including warranty for application of the non-complying products.
3) In some cases, KAGA FEI may use replacements as component parts of Products. Such replacement shall apply only to component part of Products, which KAGA FEI deems it possible to replace or substitute according to (i) Scope of Warranty provided in this specification (e.g. Electric Characteristics, Outline, dimension, Conditions of Use, Reliability Tests, Official Standard (Type Approvals etc.)) and (ii) Quality of Products.
KAGA FEI also ensures traceability of such replacement on production lot basis.

b. Instruction for Use (CAUTION)

1) Because Product is not designed for radiation durability, please refrain from exposing Product to radiation in the use.
2) Communication between this Product and other might not be established nor maintained depending upon radio environment or operating condition of this Product and other products with wireless technology.
3) This Product operates in the unlicensed ISM band at 2.4GHz. In case this Product is used around the other wireless devices which operate in same frequency band of this Product, there is a possibility that interference occurs between this Product and such other devices. If such interference occurs, please stop the operation of other devices or relocate this Product before using this Product or do not use this Product around the other wireless devices.
4) This Product mentioned in this Specification is manufactured for use in Health & Fitness Equipment, Sensor, Toys. Before using this Product in any special equipment (such as medical equipment, space equipment, aircraft, disaster prevention equipment), where higher safety and reliability are duly required, the applicability and suitability of this Product must be fully evaluated by the customer at its sole risk to ensure correct and safety operation of those special equipments. Also, evaluation of the safety function of this Product even for use in general electronics equipment shall be thoroughly made and when necessary, a protective circuit shall be added in design stage, all at the customer's sole risk.

Copyright 2025 KAGA FEI Co., Ltd.

Downloaded from Arrow.com.

5) Japan Regulatory Information

This module is approved with the specific antenna on this module. Please ensure that your product can also bear a label with the following information. If the product is so small that it is not practicable to place the label, you can also place it in the instruction manual and package. The mark diameter shall be easily legible without using a device such as light microscopes.

R 005-103118

It is recommended to include the following sentence in the user manual of your product:
This product installs a radio system which has been approved as a radio station in a low power data communication system based on the Radio Law.
ES2832: 005-103118

6) Canada Regulatory Information

a) This device complies with Innovation, Science and Economic Development Canada's applicable license-exempt RSSs. Operation is subject to the following two conditions:
(1) this device may not cause interference, and
(2) this device must accept any interference, including interference that may cause undesired operation of the device.

Le présent appareil est conforme aux CNR d'Innovation, Sciences et Développement économique Canada applicables aux appareils radio exempts de licence. L'exploitation est autorisée aux deux conditions suivantes:
1) l'appareil ne doit pas produire de brouillage;
2) l'utilisateur de l'appareil doit accepter tout brouillage radioélectrique subi, même si le brouillage est susceptible d'en compromettre le fonctionnement.

b) This product is certified as type of the portable device with Innovation, Science and Economic Development Canada Rules. To maintain compliance with RF Exposure requirement, please use within specification of this product.

Ce produit est certifié comme type de l'appareil portable avec Innovation, Sciences et Développement économique Canada Règles. Pour maintenir l'acquiescement avec exigence Exposition de RF, veuillez utiliser dans spécification de ce produit.

c) Please notify certified ID by either one of the following methods on your product.
Specifiez ID certifiée dans votre produit par une de méthode suivante.
-Contains Transmitter module IC: 28568-ES2832
-Contains IC: 28568-ES2832

d) Please indicate your product name at any location on the exterior of the host product or product packaging or product literature, which shall be available with the host product or online.

Copyright 2025 KAGA FEI Co., Ltd.

Downloaded from Arrow.com.

e) Please include the following statements in rectangle on the user manual of the host device of this module;

> This device complies with Innovation, Science and Economic Development Canada license-exempt RSS standards. Operation is subject to the following two conditions:
> (1) This device may not cause interference.
> (2) This device must accept any interference, including interference that may cause undesired operation of the device.

> Le présent appareil est conforme aux CNR Innovation, Sciences et Développement économique Canada applicables auxappareils radio exempts de licence. L' exploitation est autorisée aux deux conditions suivantes :
> 1) l' appareil ne doit pas produire de brouillage;
> 2) l' utilisateur de l' appareil doit accepter tout brouillage radioélectrique subi, même si le brouillage est susceptible d' en compromettre le fonctionnement.

7) FCC Regulatory Information

a) This device complies with part 15 of the FCC Rules. Operation is subject to the following two conditions:
(1) This device may not cause harmful interference, and
(2) this device must accept any interference received, including interference that may cause undesired operation.

b) FCC ID is not indicated on this device since there is no space on it. FCC ID of this device is as below.
FCC ID: 2A6NFES2832

c) Please notify certified ID by either one of the following methods on your product.
-Contains Transmitter Module FCC ID: 2A6NFES2832
-Contains FCC ID: 2A6NFES2832

d) CAUTION: Changes or modifications not expressly approved by the party responsible for compliance could void the user's authority to operate the equipment.

e) This product is product is certified as type of the portable device with FCC Rules. To maintain compliance with RF Exposure requirement, please use within specification of this product.

f) The antenna used for this transmitter must not be co-located or operating in conjunction with any other antenna or transmitter.

g) This module can change the output power depending on the circumstances by the application software which is developed by module installer. Any end user cannot change the output power.

h) This device complies with part 15 of the FCC Rules.
-Part 15 Subpart C

Copyright 2025 KAGA FEI Co., Ltd.

Downloaded from Arrow.com.

i) The modular transmitter is only FCC authorized for the specific rule parts (Part 15 Subpart C) listed on the grant, and the host product manufacturer is responsible for compliance to any other FCC rules that apply to the host not covered by the modular transmitter grant of certification. The final host product still requires Part 15 Subpart B compliance testing with the modular transmitter installed.

j) Co-location of this module with other transmitters that operate simultaneously are required to be evaluated using the FCC multi transmitter procedures. When installing this module to your final devices, please make sure to carry out all the necessary evaluations according to the applicable guidelines like follows:
-for RF exposure: KDB 447498, KDB 996369 and any other relevant guidelines
-for EMC: KDB 996369 D04 and any other relevant guidelines

k) When you install this module to your final devices, please ensure that your final composite product complies with the applicable FCC rules in reference to a guidance in KDB 996369.

l) Antenna List
This module is approved along with the following antenna.
You cannot use any antennas other than the listed one because it deviates from the accredited conditions.

Manufacturer	KAGA FEI
Part No.	N/A (Printed on PCB) Dimensions 3.45mm x 2.85mm
Antenna Type	Monopole
Maximum Antenna Gain	-3.7dBi

m) Please include the following statements in rectangle on the user manual of the host device of this module;

This device complies with part 15 of the FCC Rules. Operation is subject to the following two conditions: (1) This device may not cause harmful interference, and (2) this device must accept any interference received, including interference that may cause undesired operation.

FCC CAUTION: Changes or modifications not expressly approved by the party responsible for compliance could void the user's authority to operate the equipment.

The antenna used for this transmitter must not be co-located or operating in conjunction with any other antenna or transmitter.

This product is certified as type of the portable device with FCC Rules. To maintain compliance with RF Exposure requirement, please use within specification of this product.

This product is certified as type of the portable device with FCC Rules. To maintain compliance with RF Exposure requirement, please use within specification of this product.

Copyright 2025 KAGA FEI Co., Ltd.

Downloaded from Arrow.com.

8) CE Regulatory Information
   a) Manufacturer Information:
      Manufactured by: KAGA FEI Co., Ltd.
      Trade name: KAGA FEI
      Postal address: Gunseisha ANNEX Bldg. 5th floor, 382-1, Kaminamie-machi, Takasaki, Gunma, 370-0801, Japan
   b) Importer Information:
      Imported by: KAGA FEI EUROPE GmbH
      Trade name: KAGA FEI EUROPE GmbH
      Postal address: Robert-Bosch-Straße 25, 63225 Langen (Hessen), Germany
   c) This module complies with the harmonized standards below. All of the test reports are provided by KAGA FEI.

      [RE Directive 2014/53/EU]
      Radio: ETSI EN 300 328 V2.2.2 (2019-07)
      EMC: ETSI EN 301 489-1 V2.2.3 (2019-11)
      ETSI EN 301 489-17 V3.3.1 (2024-09)
      Safety: EN 62368-1:2024+A11:2024 (2024)
      RF Exposure: EN 62479:2010 (2010-09)
      Cybersecurity: EN 18031-1:2024(2024-08)
      EN 18031-2:2024(2024-08)
      EN 18031-3:2024(2024-08)

      [RoHS Directive 2011/65/EU (incl. 2015/863)]
      KAGA FEI‘s Management Standards for Chemical Substances Contained in Wireless Device Products (KFEI-CMS-MPBD-002)

   d) When your end product installs this module, it is required to proceed additional certification processes before placing on the market in EU member states to make your products fully comply with relative EU standards.
   e) KAGA FEI can provide you the test reports of conducted measurement portion for the radio module. You can utilize the test reports for the certification processes of your end product as it requires radio testing.

Copyright 2025 KAGA FEI Co., Ltd.

Downloaded from Arrow.com.

f) Simplified EU Declaration of Conformity (SDoC)

No	Language	SDoC
1	Българин [Bulgarian]	С настоящото KAGA FEI Co., Ltd. декларира, че този тип радиосъоръжение ES2832 е в съответствие с Директива 2014/53/ЕС. Цялостният текст на ЕС декларацията за съответствие може да се намери на следния интернет адрес: https://www.kagafei.com/jp/eng/products/wireless-modules/bluetooth/ES2832AA2.html
2	Español [Spanish]	Por la presente, KAGA FEI Co., Ltd. declara que el tipo de equipo radioeléctrico ES2832 es conforme con la Directiva 2014/53/UE. El texto completo de la declaración UE de conformidad está disponible en la dirección Internet siguiente: https://www.kagafei.com/jp/eng/products/wireless-modules/bluetooth/ES2832AA2.html
3	Česky [Czech]	Tímto KAGA FEI Co., Ltd. prohlašuje, že typ rádiového zařízení ES2832 je v souladu se směrnicí 2014/53/EU. Úplné znění EU prohlášení o shodě je k dispozici na této internetové adrese: https://www.kagafei.com/jp/eng/products/wireless-modules/bluetooth/ES2832AA2.html
4	Dansk [Danish]	Hermed erklærer KAGA FEI Co., Ltd., at radioudstyrstypen ES2832 er i overensstemmelse med direktiv 2014/53/EU. EU-overensstemmelseserklæringens fulde tekst kan findes på følgende internetadresse: https://www.kagafei.com/jp/eng/products/wireless-modules/bluetooth/ES2832AA2.html
5	Deutsch [German]	Hiermit erklärt KAGA FEI Co., Ltd., dass der Funkanlagentyp ES2832 der Richtlinie 2014/53/EU entspricht. Der vollständige Text der EU-Konformitätserklärung ist unter der folgenden Internetadresse verfügbar: https://www.kagafei.com/jp/eng/products/wireless-modules/bluetooth/ES2832AA2.html
6	Eesti [Estonian]	Käesolevaga deklareerib KAGA FEI Co., Ltd., et käesolev raadioseadme tüüp ES2832 vastab direktiivi 2014/53/EL nõuetele. ELi vastavusdeklaratsiooni täielik tekst on kättesaadav järgmisel internetiaadressil: https://www.kagafei.com/jp/eng/products/wireless-modules/bluetooth/ES2832AA2.html
7	Ελληνική [Greek]	Με την παρούσα ο/ηKAGA FEI Co., Ltd., δηλώνει ότι ο ραδιοεξοπλισμός ES2832 πληροί την οδηγία 2014/53/ΕΕ. Το πλήρες κείμενο της δήλωσης συμμόρφωσης ΕΕ διατίθεται στην ακόλουθη ιστοσελίδα στο διαδίκτυο: https://www.kagafei.com/jp/eng/products/wireless-modules/bluetooth/ES2832AA2.html

Copyright 2025 KAGA FEI Co., Ltd.

Downloaded from Arrow.com.

8	English	Hereby, KAGA FEI Co., Ltd. declares that the radio equipment type ES2832 is in compliance with Directive 2014/53/EU. The full text of the EU declaration of conformity is available at the following internet address: https://www.kagafei.com/jp/eng/products/wireless-modules/bluetooth/ES2832AA2.html
9	Français [French]	Le soussigné, KAGA FEI Co., Ltd., déclare que l'équipement radioélectrique du type ES2832 est conforme à la directive 2014/53/UE. Le texte complet de la déclaration UE de conformité est disponible à l'adresse internet suivante: https://www.kagafei.com/jp/eng/products/wireless-modules/bluetooth/ES2832AA2.html
10	Gaeilge [Irish]	Leis seo, dearbhaíonn KAGA FEI Co., Ltd. go gcomhlíonann an cineál trealaimh raidió ES2832 Treoir 2014/53 / AE. Tá téacs iomlán dhearbhú comhréireachta an AE ar fáil ag an seoladh idirlín seo a leanas: https://www.kagafei.com/jp/eng/products/wireless-modules/bluetooth/ES2832AA2.html
11	Hrvatski [Croatian]	KAGA FEI Co., Ltd. ovime izjavljuje da je radijska oprema tipa ES2832 u skladu s Direktivom 2014/53/EU. Cjeloviti tekst EU izjave o sukladnosti dostupan je na sljedećoj internetskoj adresi: https://www.kagafei.com/jp/eng/products/wireless-modules/bluetooth/ES2832AA2.html
12	Italiano [Italian]	Il fabbricante, KAGA FEI Co., Ltd., dichiara che il tipo di apparecchiatura radio ES2832 è conforme alla direttiva 2014/53/UE. Il testo completo della dichiarazione di conformità UE è disponibile al seguente indirizzo Internet: https://www.kagafei.com/jp/eng/products/wireless-modules/bluetooth/ES2832AA2.html
13	Latviski [Latvian]	Ar šo KAGA FEI Co., Ltd. deklarē, ka radioiekārta ES2832 atbilst Direktīvai 2014/53/ES. Pilns ES atbilstības deklarācijas teksts ir pieejams šādā interneta vietnē: https://www.kagafei.com/jp/eng/products/wireless-modules/bluetooth/ES2832AA2.html
14	Lietuvių [Lithuanian]	Aš, KAGA FEI Co., Ltd., patvirtinu, kad radijo įrenginių tipas ES2832 atitinka Direktyvą 2014/53/ES. Visas ES atitikties deklaracijos tekstas prieinamas šiuo interneto adresu: https://www.kagafei.com/jp/eng/products/wireless-modules/bluetooth/ES2832AA2.html
15	Magyar [Hungarian]	KAGA FEI Co., Ltd. igazolja, hogy a ES2832 típusú rádióberendezés megfelel a 2014/53/EU irányelvnek. Az EU-megfelelőségi nyilatkozat teljes szövege elérhető a következő internetes címen: https://www.kagafei.com/jp/eng/products/wireless-modules/bluetooth/ES2832AA2.html

Copyright 2025 KAGA FEI Co., Ltd.

Downloaded from Arrow.com.

16	Malti [Maltese]	B'dan, KAGA FEI Co., Ltd., niddikjara li dan it-tip ta' tagħmir tar-radju ES2832 huwa konformi mad-Direttiva 2014/53/UE. It-test kollu tad-dikjarazzjoni ta' konformità tal-UE huwa disponibbli f'dan l-indirizz tal-Internet li ġej: https://www.kagafei.com/jp/eng/products/wireless-modules/bluetooth/ES2832AA2.html
17	Nederlands [Dutch]	Hierbij verklaar ik, KAGA FEI Co., Ltd., dat het type radioapparatuur ES2832 conform is met Richtlijn 2014/53/EU. De volledige tekst van de EU-conformiteitsverklaring kan worden geraadpleegd op het volgende internetadres: https://www.kagafei.com/jp/eng/products/wireless-modules/bluetooth/ES2832AA2.html
18	Polski [Polish]	KAGA FEI Co., Ltd. niniejszym oświadcza, że typ urządzenia radiowego ES2832 jest zgodny z dyrektywą 2014/53/UE. Pełny tekst deklaracji zgodności UE jest dostępny pod następującym adresem internetowym: https://www.kagafei.com/jp/eng/products/wireless-modules/bluetooth/ES2832AA2.html
19	Português [Portuguese]	O(a) abaixo assinado(a) KAGA FEI Co., Ltd. declara que o presente tipo de equipamento de rádio ES2832 está em conformidade com a Diretiva 2014/53/UE. O texto integral da declaração de conformidade está disponível no seguinte endereço de Internet: https://www.kagafei.com/jp/eng/products/wireless-modules/bluetooth/ES2832AA2.html
20	Român [Romanian]	Prin prezenta, KAGA FEI Co., Ltd. declară că tipul de echipamente radio ES2832 este în conformitate cu Directiva 2014/53/UE. Textul integral al declarației UE de conformitate este disponibil la următoarea adresă internet: https://www.kagafei.com/jp/eng/products/wireless-modules/bluetooth/ES2832AA2.html
21	Slovensky [Slovak]	KAGA FEI Co., Ltd. týmto vyhlasuje, že rádiové zariadenie typu ES2832 je v súlade so smernicou 2014/53/EÚ. Úplné EÚ vyhlásenie o zhode je k dispozícii na tejto internetovej adrese: https://www.kagafei.com/jp/eng/products/wireless-modules/bluetooth/ES2832AA2.html
22	Slovensko [Slovenian]	KAGA FEI Co., Ltd. potrjuje, da je tip radijske opreme ES2832 skladen z Direktivo 2014/53/EU. Celotno besedilo izjave EU o skladnosti je na voljo na naslednjem spletnem naslovu: https://www.kagafei.com/jp/eng/products/wireless-modules/bluetooth/ES2832AA2.html

Copyright 2025 KAGA FEI Co., Ltd.

Downloaded from Arrow.com.

23	Suomi [Finnish]	KAGA FEI Co., Ltd. vakuuttaa, että radiolaitetyyppi ES2832 on direktiivin 2014/53/EU mukainen. EU-vaatimustenmukaisuusvakuutuksen täysimittainen teksti on saatavilla seuraavassa internetosoitteessa: https://www.kagafei.com/jp/eng/products/wireless-modules/bluetooth/ES2832AA2.html
24	Svenska [Swed ish]	Härmed försäkrar KAGA FEI Co., Ltd. att denna typ av radioutrustning ES2832 överensstämmer med direktiv 2014/53/EU. Den fullständiga texten till EU-försäkran om överensstämmelse finns på följande webbadress: https://www.kagafei.com/jp/eng/products/wireless-modules/bluetooth/ES2832AA2.html
25	Türkçe [Turkish]	İşbu belgede, KAGA FEI Co., Ltd. telsiz cihazı tipinin ES2832 2014/53/EU Direktifi ile uyumlu olduğunu beyan eder. AB uygunluk beyanının tam metnine aşağıdaki internet adresinden ulaşılabilir: https://www.kagafei.com/jp/eng/products/wireless-modules/bluetooth/ES2832AA2.html

Copyright 2025 KAGA FEI Co., Ltd.

Downloaded from Arrow.com.

c. Term of Support

1) In the case that customer requests KAGA FEI to customize the hardware of this Product in order to meet such customer's specific needs, KAGA FEI will make commercially reasonable effort to modify such hardware or software at customer's expense; provide however, the customer is kindly requested to agrees it doesn't mean that KAGA FEI has obligations to do so even in the case it is technically difficult for KAGA FEI.
2) Any failure arising out of this Product will be examined by KAGA FEI regardless of before or after mass production. Customer agrees that once such failure is turned out not to be responsible for KAGA FEI after aforesaid examination, some of the technical support shall be conducted by KAGA FEI at customer's expense; provided however, exact cost of this technical support can be agreed through the negotiation by the parties.
3) Do not alter hardware and/or software of this Product. Please note that KAGA FEI shall not be liable for any problem if it is caused by customer's alteration of Hardware without KAGA FEI's prior approvals.
4) KAGA FEI does not guarantee functions and performances which depend on the customer's firmware. KAGA FEI does not assume liabilities for defects and failures (i) in functions, performances and quality of the Customer's product incorporating the Products and (ii) which may occur as the Product is incorporated in the Customer's product.

d. Caution for Export Control

This Product may be subject to governmental approvals, consents, licenses, authorizations, declarations, filings, and registrations for export or re-export of the Product, required by Japanese Foreign Exchange and Foreign Trade Law (including related laws and regulations) and/or any other country's applicable laws or regulations related to export control.

In case you will export or re-export this Product, you are strongly recommended to check and confirm, before exporting or re-exporting, necessary procedures for export or re-export of this Product which is required by applicable laws and regulations, and if necessary, you have to obtain necessary and appropriate approvals or licenses from governmental authority at your own risk and expense.

e. Term of Warranty

KAGA FEI warrants only that this Product is in conformity with this Specification for one year after purchase and shall in no event give any other warranty.

f. Items of the Specification

1) Any question arising from the Specification shall be solved in good faith through mutual discussion by the parties hereof.
2) The language of this "General items" is Japanese and this "General items" shall be interpreted by Japanese Any copies of translation is a reference purpose only and is not binding on both parties hereto.

Copyright 2025 KAGA FEI Co., Ltd.

Downloaded from Arrow.com.

g. Special note

1) The latest errata and document released by Nordic Semiconductor ASA must be referred the document is given priority over this document. Please note that KAGA FEI shall not be liable for any problem and related issue for developed or manufactured application software or product without reference or consideration of the information released by Nordic Semiconductor ASA.
2) KAGA FEI writes firmware for and fixed SoftDevice (s132_nrf52_7.2.0_softdevice.hex)) to this product. Customer writes firmware that is match the customer applications including SoftDevice at the customer's own responsibility.
3) The Electrical Characteristics defined in this Specification are of the module with above Firmware (s132_nrf52_7.2.0_softdevice.hex)). If other firmware developed by Customer is installed, the characteristics may differ from the defined value in the Electrical Characteristics. Bluetooth qualification and radio type approval may become invalid.
4) ES2832 series module is qualified as PHY only with Component category by Bluetooth SIG. The QDID of this module is 98386. The final product needs to get qualification as End product combining with PHY (module), SoftDevice and Profile before selling the product. The combination of Link and Host layer is different depending on SoftDevice. Please refer to following combination and consult with your qualification body and BQC.

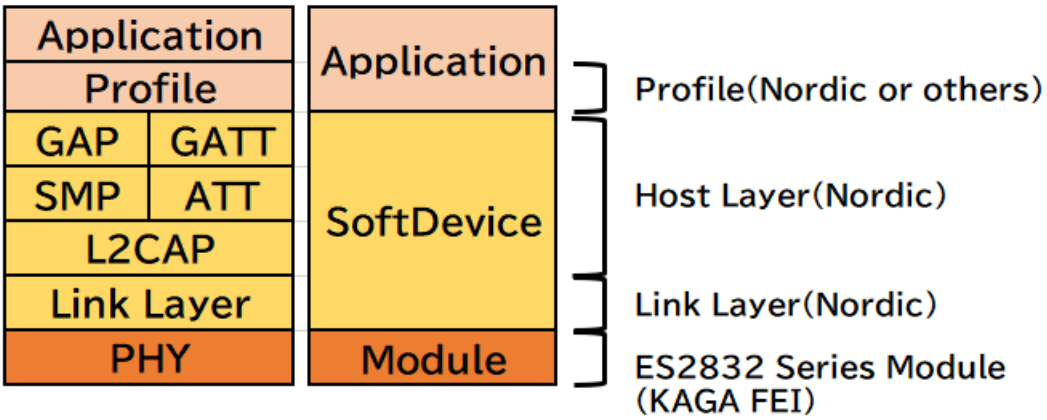

Copyright 2025 KAGA FEI Co., Ltd.

Downloaded from Arrow.com.

3.Absolute maximum ratings

Symbol	Parameter	Min.	Max.	Units
VCC_NRF		-0.3	+3.9	V
GND			0	V
VIO, VCC_NRF≤3.6V		-0.3	VCC_NRF+ 0.3	V
VIO, VCC_NRF>3.6V		-0.3	+3.9	V
Storage temperature		-40	+85	Deg-C
MSL	Moisture Sensitivity Level	3		
ESD HBM	Human Body Model		1	kV
ESD MM	Machine Model		100	V
Endurance	Flash Memory Endurance	10000		write/erase cycles
Retention	Flash Memory Retention	10 years		At 85 deg-C
Number of times a 512 byte block can be written between erase cycles	32bit writes		181	times

Copyright 2025 KAGA FEI Co., Ltd.

Downloaded from Arrow.com.

4.Electrical characteristics

4.1.Recommendation operating range

Symbol	Parameter	Min.	Typ.	Max.	Units
VCC_NRF	Supply voltage, normal mode	1.7	3.0	3.6	V
tR_VCC_NRF	Supply rise time (0V to 1.7V)*1			60	ms
TA	Operation temperature	-40	25	85	Deg-C

*1 The on-chip power-on reset circuitry may not function properly for rise times outside the specified interval. Also after power off, it must start up from below 0.3V. The on-chip power-on reset circuitry may not function properly.

4.2.DC Specifications

The Specification applies for Topr.= 25 degrees C, VCC_NRF = 3.0V

Symbol	Parameter (condition)	Min.	Typ.	Max.	Units
VIH	Input high voltage	0.7 VCC_NRF		VCC_NRF	V
VIL	Input low voltage	GND		0.3 VCC_NRF	V
VOH	Output high voltage (high drive 5 mA)	VCC_NRF-0.4		VCC_NRF	V
VOL	Output low voltage (high drive 5 mA)	GND		GND+0.4	V
RPU	Pull-up resistance	11	13	16	kohm
RPD	Pull-down resistance	11	13	16	kohm
ITX,+4dBm ,DCDC	TX only run current (DCDC, 3V) PRF=+4 dBm		7.5		mA
ITX,+4dBm	TX only run current PRF=+4 dBm		16.6		mA
IRX,1M, DCDC	RX only run current (DCDC, 3V) 1Mbps BLE		5.4		mA
IRX,1M	RX only run current 1Mbps BLE		11.7		mA
IRX,2M, DCDC	RX only run current (DCDC, 3V) 2Mbps BLE		5.8		mA
IRX,2M	RX only run current 2Mbps BLE		12.9		mA
IOFF	Current in SYSTEM-OFF, no RAM retention		0.3		uA
ION	SYSTEM-ON base current		1.2		uA
IRAM	Additional RAM retention current per 4KB RAM block		20		nA

Copyright 2025 KAGA FEI Co., Ltd.

Downloaded from Arrow.com.

4.3.RF Specifications

Symbol	Description	Min.	Typ.	Max.	Units
Fop	Operating frequencies	2402		2480	MHz
PLL_{chsp}	PLL channel spacing		1		MHz
Df_{BLE2M}	Frequency deviation @ BLE 1Mbps		+/-250		kHz
Df_{BLE2M}	Frequency deviation @ BLE 2Mbps		+/-500		kHz
P_{RF}	Maximum output power		4	6	dBm
P_{RFC}	RF power control range		24		dB
P_{RFCR}	RF power accuracy			+/-4	dB
P_{RF1}	1st Adjacent Channel Transmit Power 1 MHz		-25		dBc
P_{RF2}	2nd Adjacent Channel Transmit Power 2 MHz		-50		dBc
PRX_{MAX}	Maximum received signal strength at < 0.1% PER		0		dBm
$P_{SENS,IT,1M,BLE}$	Receiver sensitivity 1Mbps BLE Ideal transmitter <=37bytes (0.1% BER)		-94		dBm
$P_{SENS,IT,2M,BLE}$	Receiver sensitivity 2Mbps BLE Ideal transmitter Packet length<=37bytes		-91		dBm

Many documents of nRF52832, such as product specification and the errata, can be found at the link below (There is a possibility that it will change in the future). Please be sure to check these latest documents when using our module.

nRF52832_Product Specification
https://infocenter.nordicsemi.com/topic/struct_nrf52/struct/nrf52832_ps.html

nRF52832_Errata
https://infocenter.nordicsemi.com/topic/struct_nrf52/struct/nrf52832_errata.html

S132_SoftDevice Specification
https://infocenter.nordicsemi.com/topic/sds_s132/SDS/s1xx/s130.html

For more information
https://infocenter.nordicsemi.com/topic/struct_welcome/struct/welcome.html

Copyright 2025 KAGA FEI Co., Ltd.

Downloaded from Arrow.com.

5.Circuit Schematic

5.1.Block Diagram

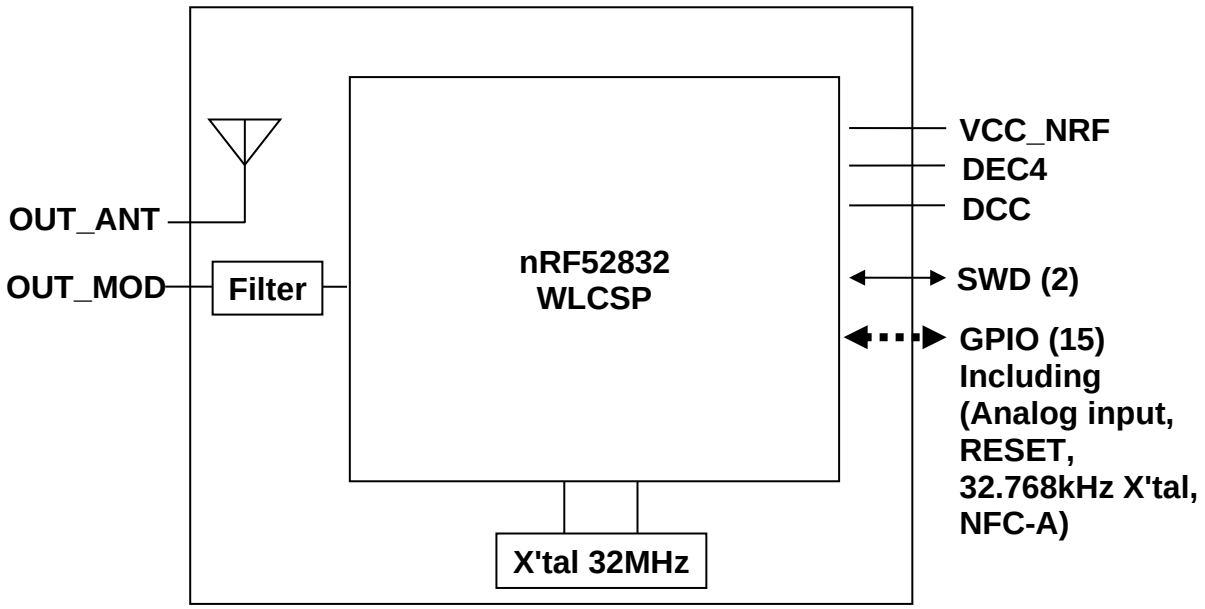

Copyright 2025 KAGA FEI Co., Ltd.

Downloaded from Arrow.com.

5.2.Sample circuits

Internal LDO setup

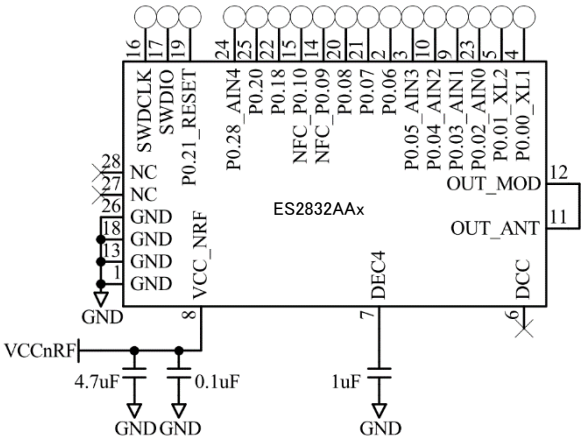

Internal LDO setup with external 32.768kHz X'tal

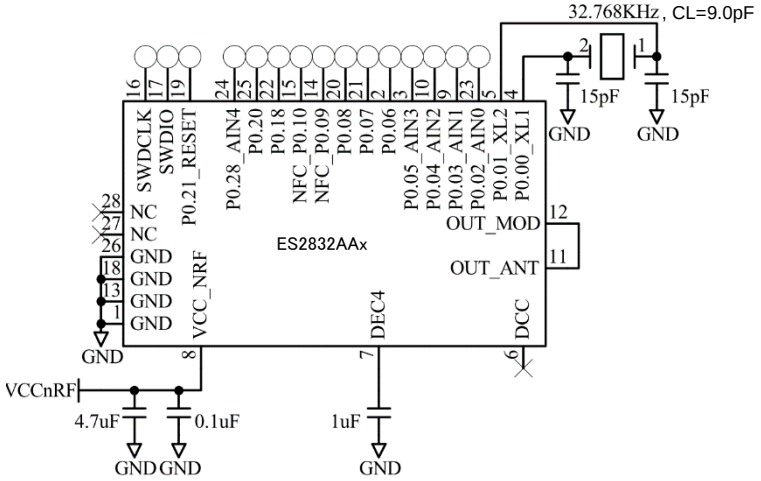

DC/DC converter setup

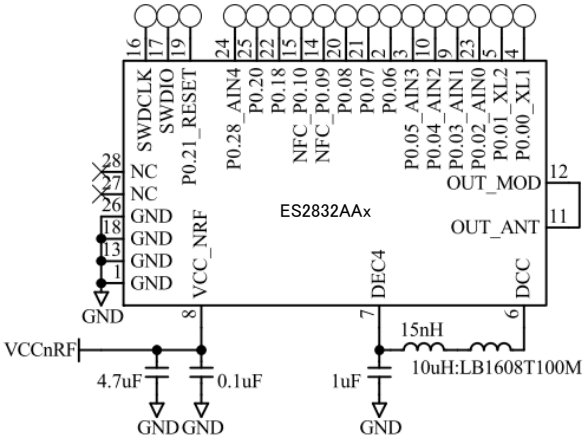

Value	Description	Footprint [mm]
0.1uF	Capacitor, X5R, ±10 %	1005
4.7uF	Capacitor, X5R, ±10 %	1608
1.0uF	Capacitor, X5R, ±10 %	1005
15pF	Capacitor, C0H, ±5 %	1005
32.768 kHz	FC-12M (EPSON), SC-20S (SII), etc., Cl = 9 pF	2012
15nH	High frequency chip inductor ±5 %	1005
10uH	LB1608T100M	1608

Copyright 2025 KAGA FEI Co., Ltd.

Downloaded from Arrow.com.

5.3.Reference Circuits

Internal LDO setup with external 32.768kHz X'tal

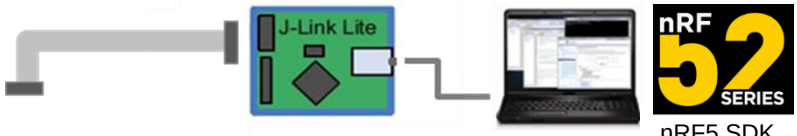

nRF5 SDK

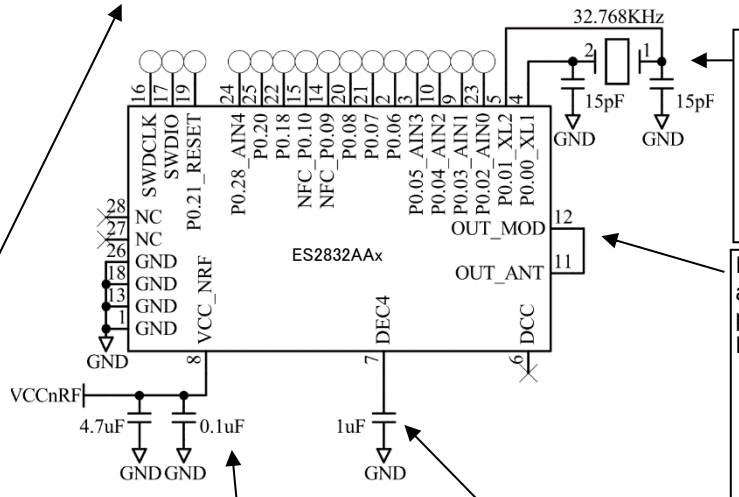

FC-12M (EPSON)
SC-20S (SII), etc.
CL=9.0pF
ANT specification requires +/-50ppm accuracy. Please consider about operation temperature range

In order to use the built-in antenna on the module, please connect PAD11 and PAD12 as short as possible.

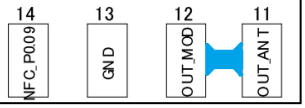

SWD (Serial Wire Debug) is a high-performance 2-pin debug port low-pin-count alternative to JTAG. It can write the application software and firmware by those pins through the J-Link Lite. Example and Applications written for Keil uVision IDE.
When the customers use the cable in Nordic DK to use J-LINK Lite, it will need to implement the socket on the customers main board side. The socket will be "10-pin connector two rows of 1.27mm pitch (Ex: PSS-720153-05, Hirosugi instrument). The cable in Nordic DK has a protection to avoid reverse connection. In order to use this cable, please remove the pin 7 of the socket on main board.
J-Link Lite is working with 3.3V. It does not work with 1.8V.

Be sure to mount a capacitor of 1uF near the module.

P0.00-P0.28 are GPIOs. By setting in the application software, it is assigned to pin any such as UART, etc. Please make Open Status about unused pins.
VIO is connected to VCC in a module. Please use IO voltage under the following conditions.
Input high (V): 0.7VCC to VCC
Input low (V): GND to 0.3VCC

When you want to measure the antenna performance or RF conduction performance, please draw a tie line of PAD11 and PAD12 outside a module.

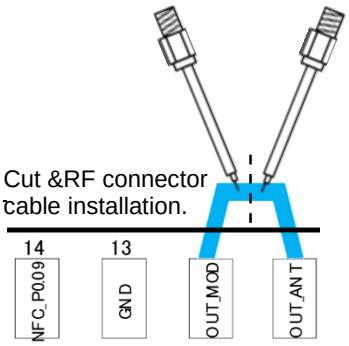

In case of the operation with the battery, we recommend that you add a capacitor of about 100uF in view of the voltage drop during TX/RX
In case of the power supply voltage fluctuation by the load change is large, the module may not function properly.
If an external regulator is used, the load change characteristic should be good in order to keep stable voltage as possible when the current is change.

Copyright 2025 KAGA FEI Co., Ltd.

Downloaded from Arrow.com.

6.Outline/Appearance

Outline / Land pattern example

Tolerance: +/- 0.2mm
Unit: (mm)

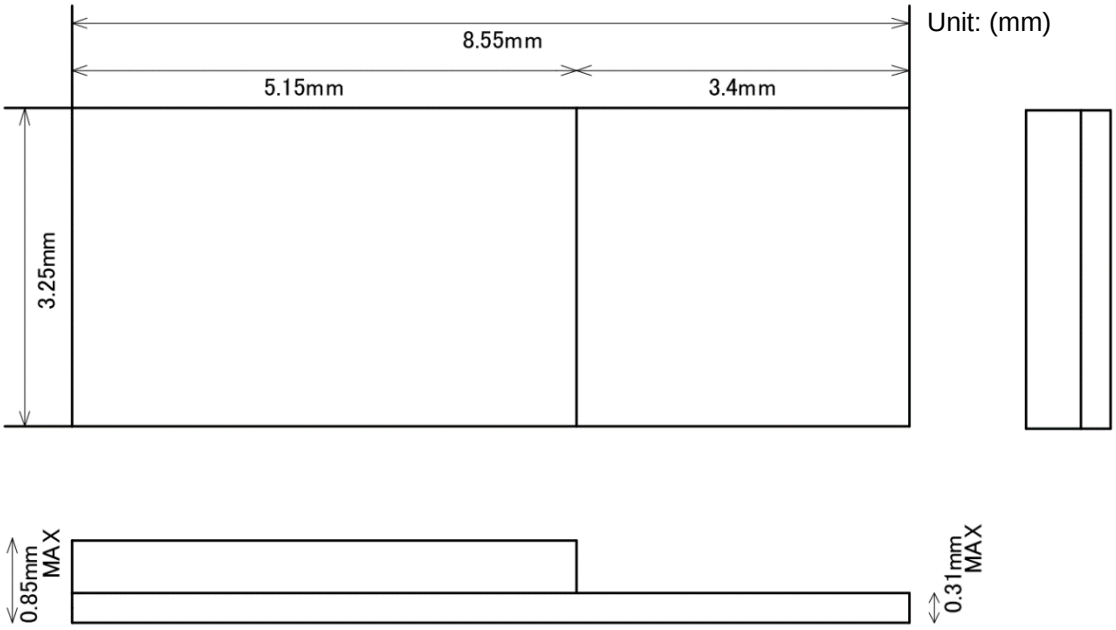

Top View

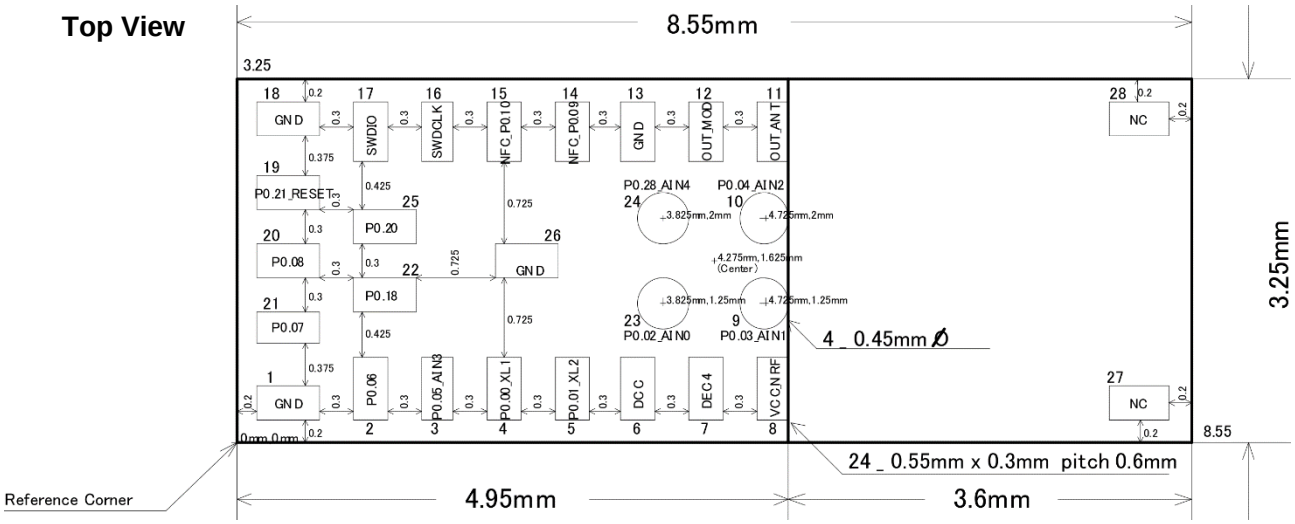

The dimension of the land pattern is the same as a foot pattern.
Recommended metal mask for solder printing

Pad size	Metal mask opening
Square pad 24 – 0.55 x 0.3 mm	0.44 x 0.3 mm
Circle pad 4 – 0.45 mm dia	0.4 mm

The metal mask thickness: t=0.1mm
If it is different from the above, please adjust the opening of the metal mask so that it has the same volume.

Copyright 2025 KAGA FEI Co., Ltd.

Downloaded from Arrow.com.

7.Pin Layout

Pin Descriptions

Pin	Pin name	Pin function	Description
1	GND	Ground	Ground pin. (0 V)
2	P0.06	Digital I/O	General purpose I/O pin.
3	P0.05_AIN3	Digital I/O Analog input	General purpose I/O pin. SAADC/COMP/LPCOMP input.
4	P0.00_XL1	Digital I/O Analog input	General purpose I/O pin. Connection for 32.768kHz crystal (LFXO).
5	P0.01_XL2	Digital I/O Analog input	General purpose I/O pin. Connection for 32.768kHz crystal (LFXO).
6	DCC	Power	DC/DC converter output pin.
7	DEC4	Power	1V3 regulator supply decoupling. Input from DC/DC converter. Output from 1.3 V LDO.
8	VCC_NRF	Power	Power supply pin.
9	P0.03_AIN1	Digital I/O Analog input	General purpose I/O pin. SAADC/COMP/LPCOMP input.
10	P0.04_AIN2	Digital I/O Analog input	General purpose I/O pin. SAADC/COMP/LPCOMP input.
11	OUT_ANT	Antenna In/Out	Internal antenna. It should be connected to Pin 12 OUT_MOD for normal operation.
12	OUT_MOD	RF In/Out	RF I/O pin. It should be connected to Pin 11 OUT_ANT for normal operation.
13	GND	Ground	Ground pin. (0 V)
14	NFC_P0.09	NFC input Digital I/O	NFC antenna connection. General purpose I/O pin.
15	NFC_P0.10	NFC input Digital I/O	NFC antenna connection. General purpose I/O pin.
16	SWDCLK	Digital input	Serial Wire Debug clock input for debug and programming
17	SWDIO	Digital I/O	Serial Wire Debug I/O for debug and programming
18	GND	Ground	Ground pin. (0 V)
19	P0.21_RESET	Digital I/O	General purpose I/O pin. Configurable as system RESET pin. (Factory default: GPIO)
20	P0.08	Digital I/O	General purpose I/O pin.
21	P0.07	Digital I/O	General purpose I/O pin.
22	P0.18 TRACEDATA[0]	Digital I/O	General purpose I/O pin. Trace port output.
23	P0.02_AIN0	Digital I/O Analog input	General purpose I/O pin. SAADC/COMP/LPCOMP input.
24	P0.28_AIN4	Digital I/O Analog input	General purpose I/O pin. SAADC/COMP/LPCOMP input.
25	P0.20 TRACECLK	Digital I/O	General purpose I/O pin. Trace port clock output.
26	GND	Ground	Ground pin. (0 V)
27	NC	Not Connected	Isolated pad on PCB for mechanical stability.
28	NC	Not Connected	Isolated pad on PCB for mechanical stability.

Copyright 2025 KAGA FEI Co., Ltd.

Downloaded from Arrow.com.

8.Handling Precaution

This specification describes desire and conditions especially for mounting.

Desire/Conditions

8.1.Environment conditions for use and storage

1. Store the components in an environment of < **40deg-C/90％RH** if they are in a moisture barrier bag packed by KAGA FEI.
2. Keep the factory ambient conditions at < **30deg-C/60％RH** .
3. Store the components in an environment of < **25±5deg-C/10%RH** after the bag is opened. (The condition is also applied to a stay in the manufacture process).

8.2.Conditions for handling of products

Make sure all of the moisture barrier bags have no holes, cracks or damages at receiving. If an abnormality is found on the bag, its moisture level must be checked in accordance with 2 in 8.2.

Refer to the label on the bag.

1. All of the surface mounting process (reflow process) must be completed **in 12 months** from the bag seal date.
2. Make sure humidity in the bag is less than **10%RH** immediately after open, using a humidity indicator card sealed with the components.
3. **All** of the surface mounting process (reflow process including rework process) must be completed in **168 hours** after the bag is opened (inclusive of any other processes).
4. If any conditions in 8.1 or condition 2 and 3 in 8.2 are not met, bake the components in accordance with the conditions at **125deg-C 24hours**.
5. As a rule, baking the components in accordance with conditions 4 in 8.2 shall be once.
6. Since semi-conductors are inside of the components, they must be free from static electricity while handled.(<100V) Use ESD protective floor mats, wrist straps, ESD protective footwear, air ionizers etc. , if necessary.
7. Please make sure that there are lessen mechanical vibration and shock for this module, and do not drop it.
8. Please recognize pads of back side at surface mount.
9. Washing the module is not recommended. If washing cannot be avoided, please test module functionality and performance after thoroughly drying the module.
   We cannot be held responsible for any failure due washing the module.

Copyright 2025 KAGA FEI Co., Ltd.

Downloaded from Arrow.com.

10. Please perform temperature conditions of module at reflow within the limits of the following. Please give the number of times of reflow as a maximum of 2 times.

Recommented Reflow Profile

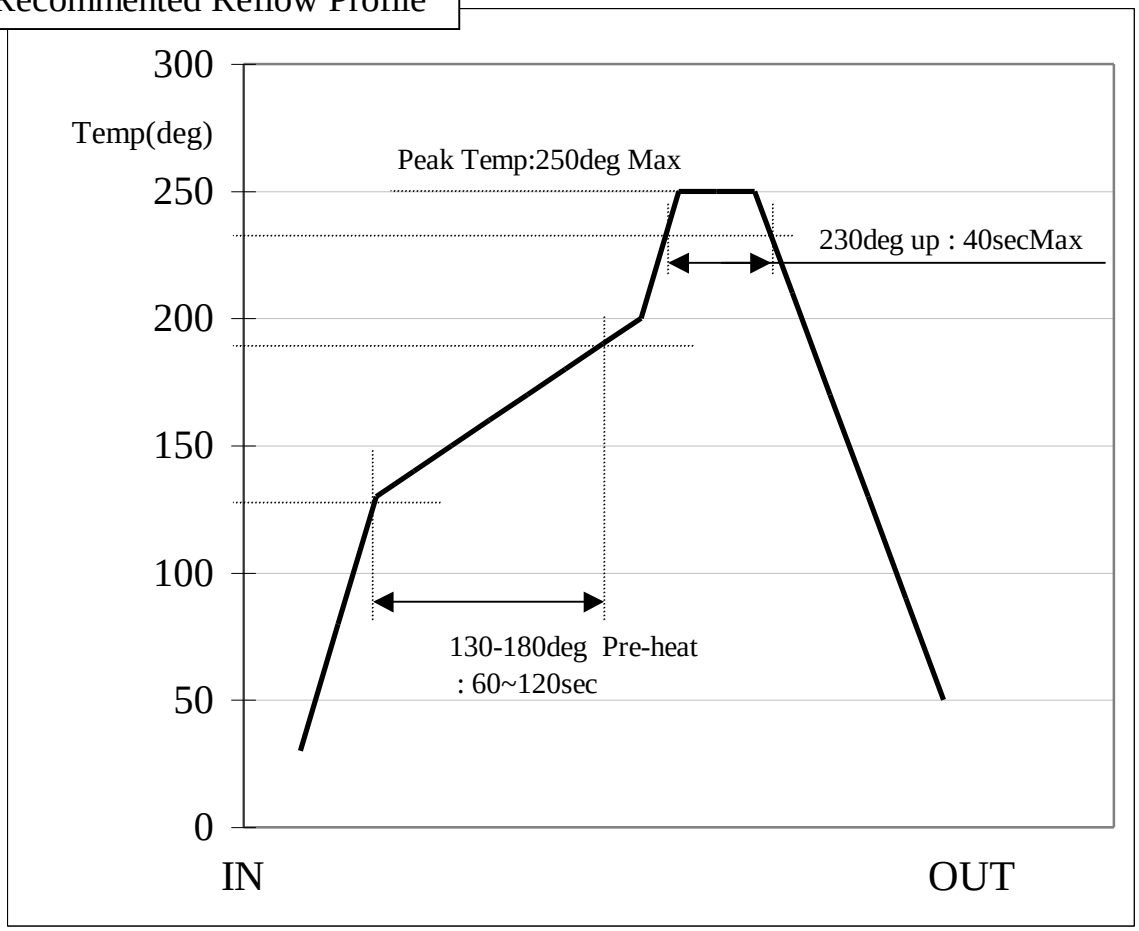

Copyright 2025 KAGA FEI Co., Ltd.

Downloaded from Arrow.com.

9.Packaging Specification

9.1.Packaging Specification

(1) Packaging Material

Name	Outline	Materials
Emboss	16 ㎜ wide - 8 ㎜ Pitch	Couductive PS
Cover Tape	-	-
Reel	φ330 ㎜	Couductive PS
Desiccant	30g×1	-
Humidity indicator card	-	-
Aluminum moisture barrier bag	420×460（㎜）	(AS)PET/AL/NY/PE(AS)
Label	-	-
Corrugated cardboard box(Inner)	339×351×74（㎜）	-
Corrugated cardboard box(Outer)	369×369×277(㎜）	-

(2) Packaging Unit

Max 2,000 pieces/Reel Max 6,000 pieces/Box(Outer)

(3) Packing Figure

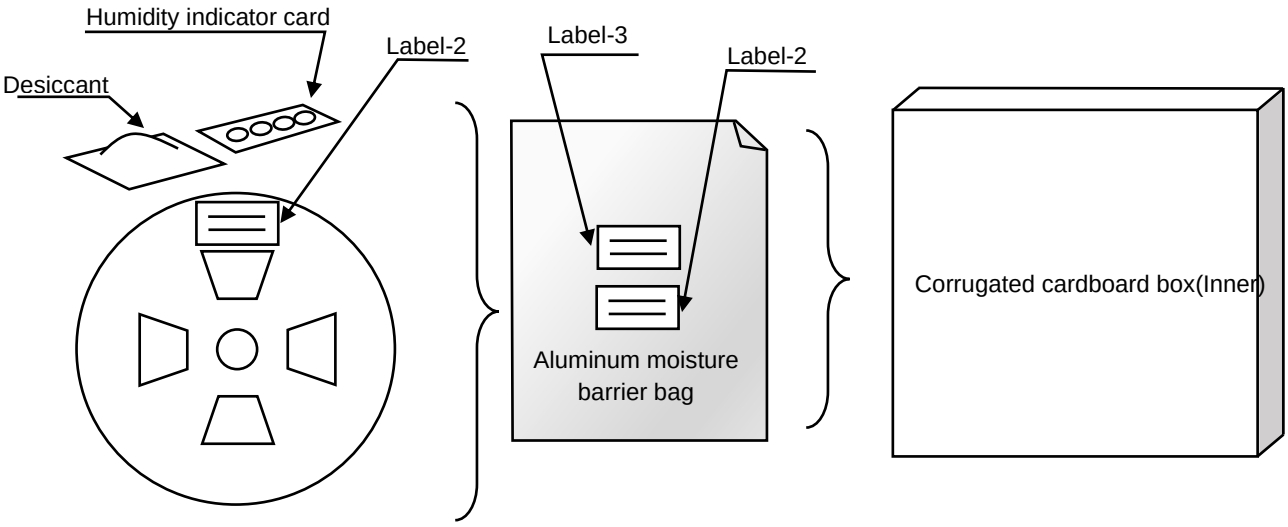

Copyright 2025 KAGA FEI Co., Ltd.

Downloaded from Arrow.com.

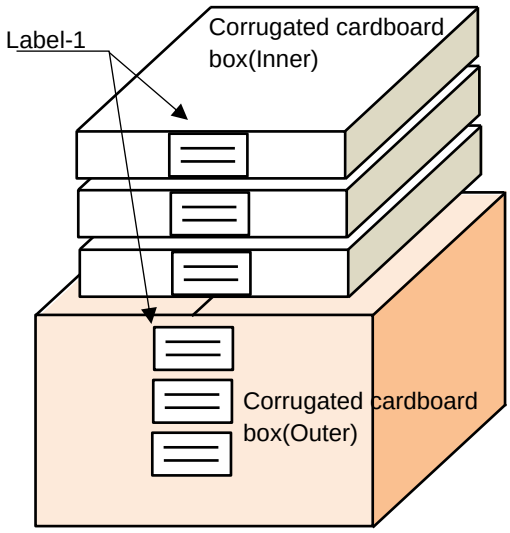

(4) Label

Label-1
- Purchase order
- Part No.
- Quantity
- Lot No.
- Technical conformity mark
- Certification No.
- FCC/ISED certification No.
- Country of origin

Label-2
- Serial No.
- Part No.
- Quantity
- Technical conformity mark
- Certification No.
- FCC/ISED certification No.
- Country of origin

Label-3
- Caution label
- MSL Level3

9.2.Tape specification

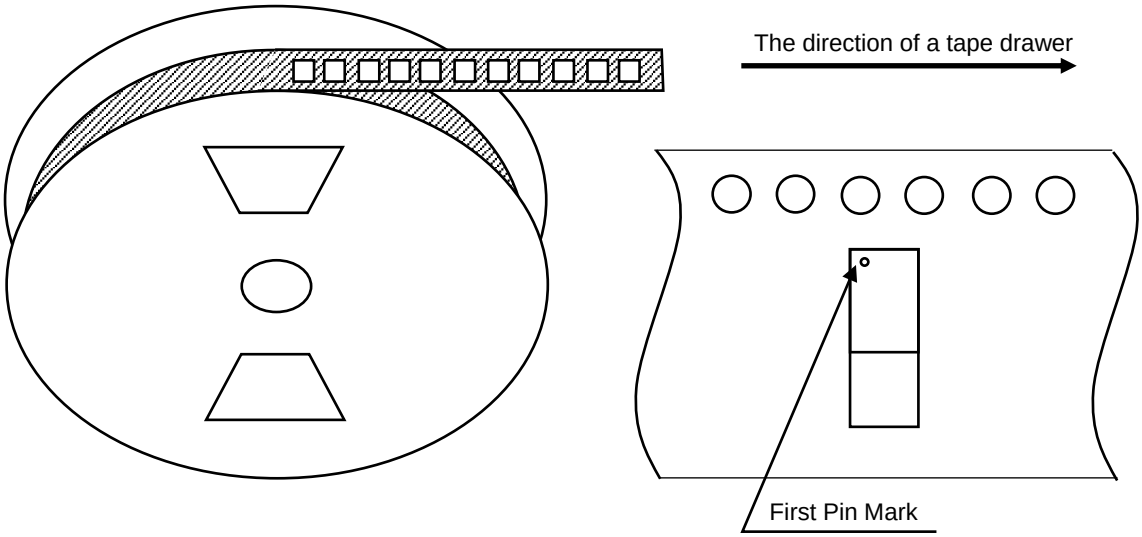

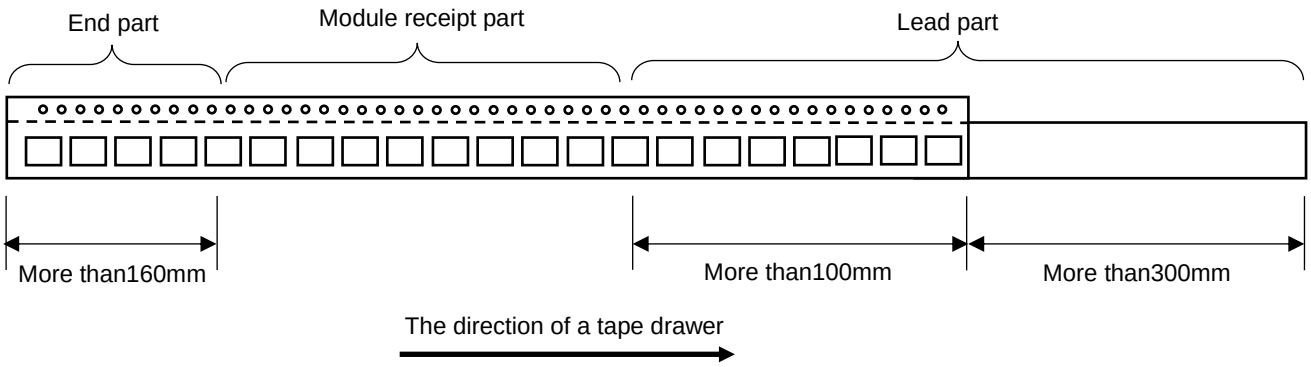

Copyright 2025 KAGA FEI Co., Ltd.

Downloaded from Arrow.com.

Emboss carrier tape drawing

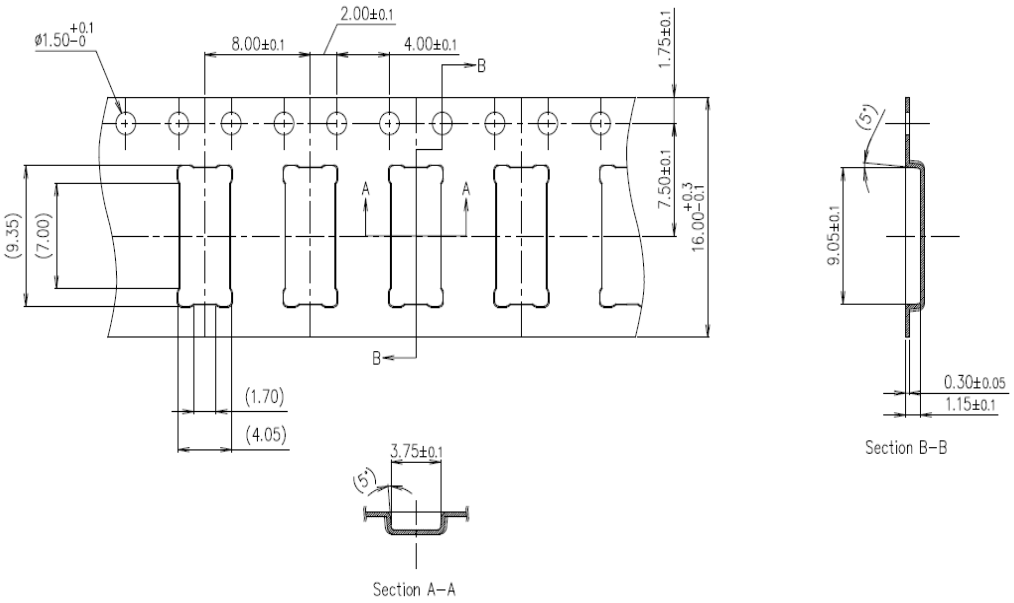

9.3.Reel specification

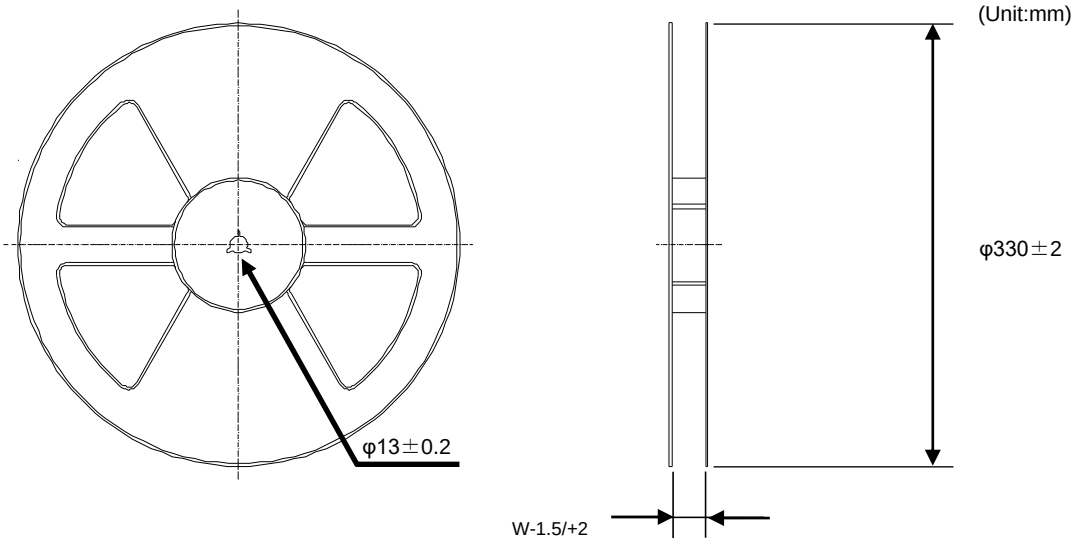

Tape wide	8mm	12mm	16mm	24mm	32mm	44mm
w	9.4mm	13.4mm	17.4mm	25.4mm	33.4mm	45.4mm

Copyright 2025 KAGA FEI Co., Ltd.

Downloaded from Arrow.com.

9.4.Taping performance

Both of an embossing tape top cover tape bear this,when the power of 10N is applied in the direction of a drawer.

The exfoliation adhesion of a top cover tape is the intensity of 0.1~1.3N.
(The angle to pull is 165~180 degrees. The speed to pull is 300 mm/min)

Note

Lack of the parts in 1 reel is with two or less pieces.

MSL Level 3 Under control

Copyright 2025 KAGA FEI Co., Ltd.

Downloaded from Arrow.com.

10.Antenna application note

10.1.Recommended module mounting example

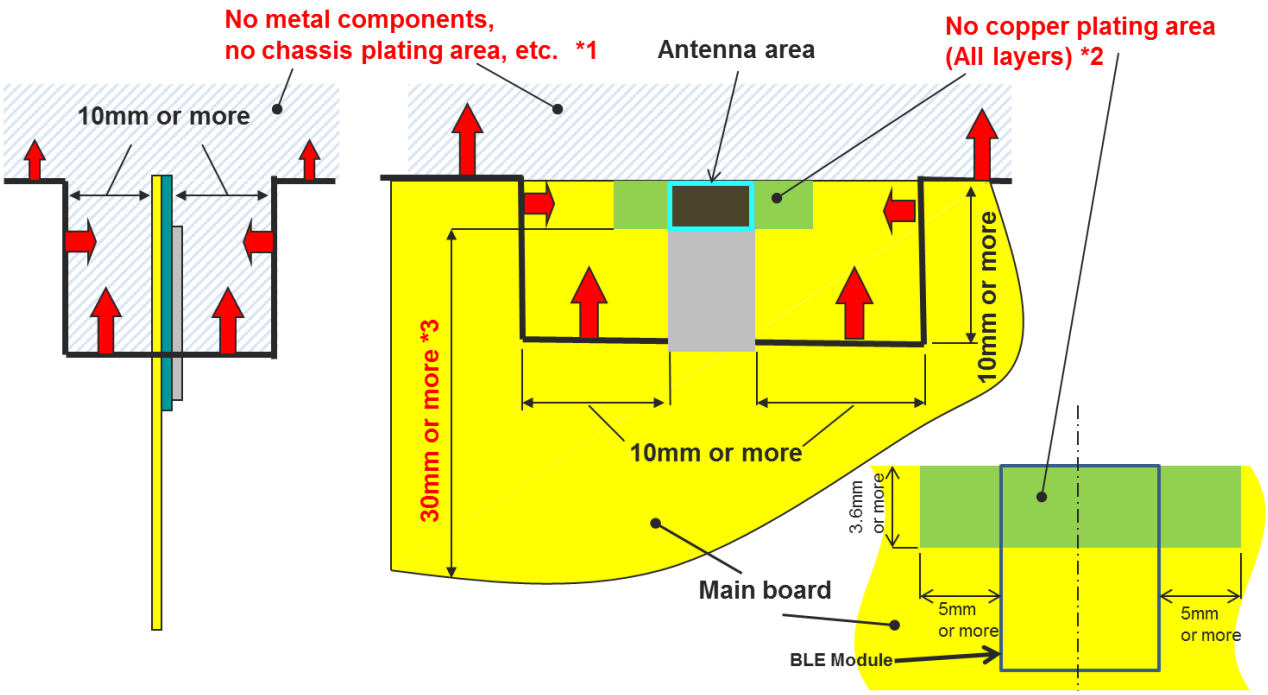

*1 Please do not place any metal components in blue shaded space.*1) We do not recommend placing any metal objects upper space of the module in the above figure. If it needs to place metal objects, please consider keeping the metal off from the antenna as far as you can. Such as signal line and metal chassis as possible except for main board while mounting the components in *1 space on the main board is allowed except for no copper plating area. (*2).

*2 This area is routing prohibited area on the main board. Please do not place copper on any layer. Please remain use of FR-4 dielectric material. The antenna is tuned with the FR-4.

*3 Characteristics may deteriorate when GND pattern length is less than 30mm. It should be 30 mm or more as possible.

Even when above mentioned condition is satisfied, communication performance may be significantly deteriorated depending on the structure of the product.

Copyright 2025 KAGA FEI Co., Ltd.

Downloaded from Arrow.com.

10.2.Other module mounting examples

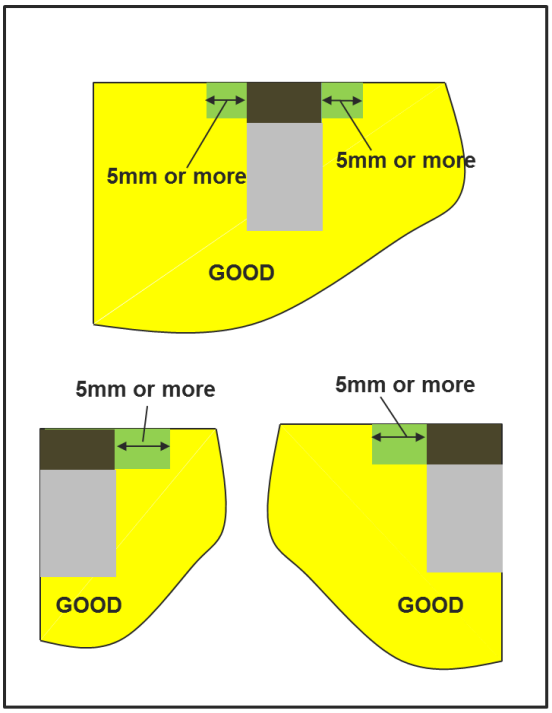

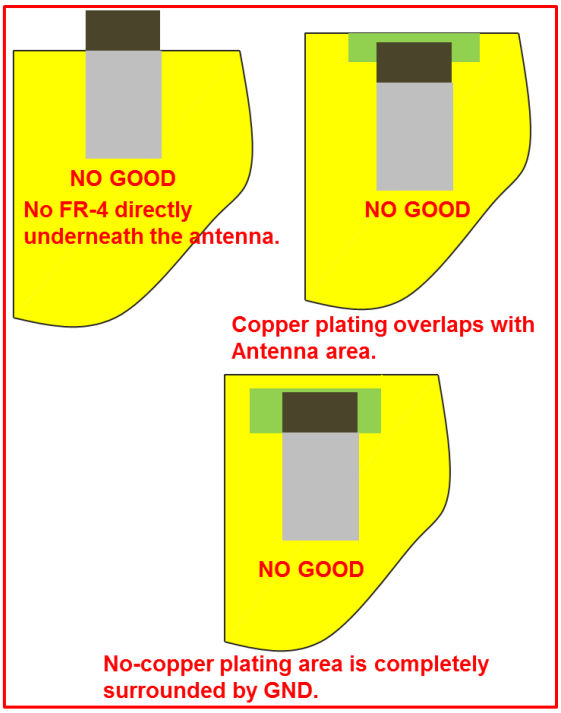

10.3.Placement of resin or plastic parts

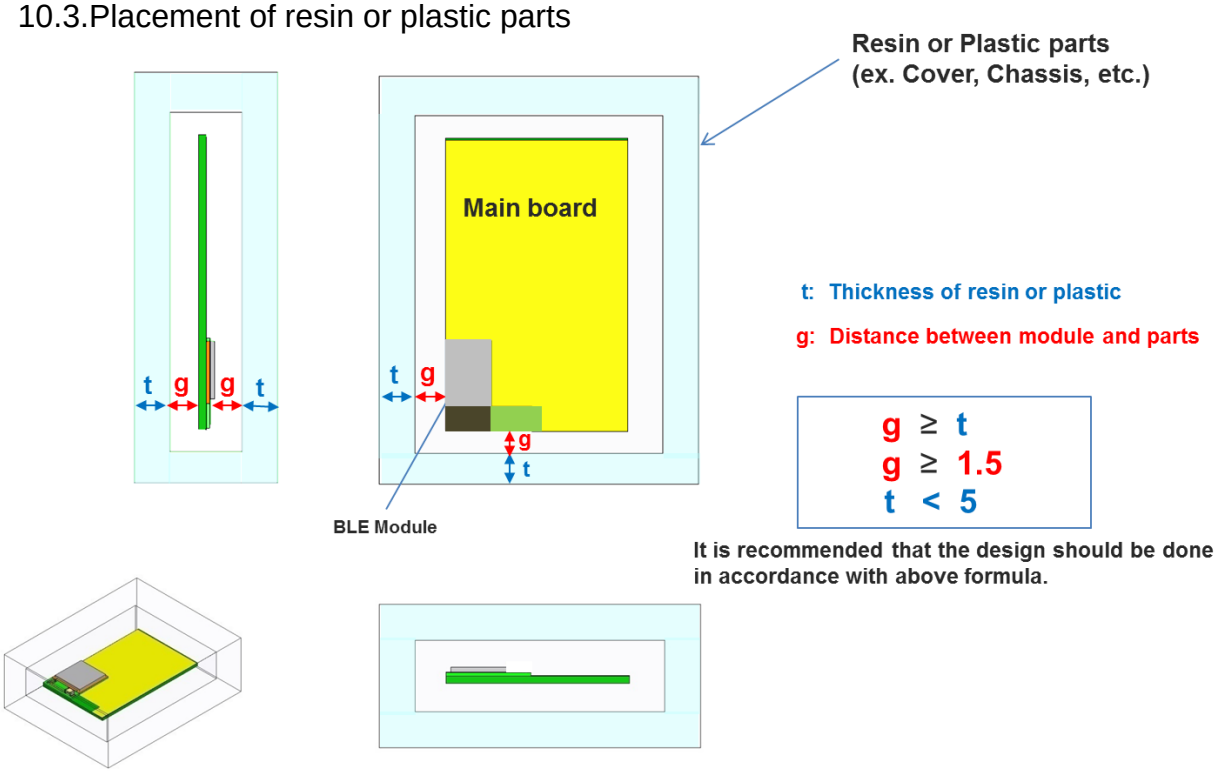

Please do not apply molding over the antenna area of BLE module.

Copyright 2025 KAGA FEI Co., Ltd.

Downloaded from Arrow.com.

10.4.Directional characteristics example (when mounted on evaluation board)

Measurement data of antenna

Appearance and coordinates definition

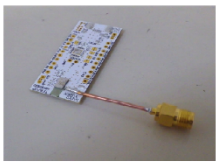

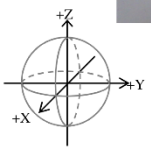

Frequency	[MHz]	@2400	@2442	@2484
Peak gain		[dBi]		
3-plane	TX-H	-5.3	-4.4	-4.8
	TX-V	-4.9	-4.0	-3.7
		-4.9	**-4.0**	**-3.7**
Average gain		[dBi]		
XY-plane	TX-H	-10.4	-9.7	-9.5
	TX-V	-21.7	-20.2	-19.2
	Plus(H,V)	-10.1	-9.3	-9.0
YZ-plane	TX-H	-15.3	-14.5	-14.3
	TX-V	-7.1	-6.2	-6.1
	Plus(H,V)	-6.5	-5.6	-5.5
ZX-plane	TX-H	-9.9	-9.2	-9.6
	TX-V	-13.5	-12.6	-12.3
	Plus(H,V)	-8.4	-7.6	-7.7
3-plane	TX-H	-11.3	-10.6	-10.6
	TX-V	-10.8	-9.9	-9.8
		-8.1	**-7.2**	**-7.2**
Efficiency	[dB]	**-8.2**	**-7.4**	**-7.4**
VSWR	[:1]	1.4	1.2	1.9

*Note: Peak gain(3-plane)=Peak(XY[H],XY[V],YZ[H])YZ[V],ZX[H])ZX[V])
*Note:The value is average value in 1 round of each inclination direction angle.
*Note: Average gain(3-plane)=Average(XY[Plus(H,V)],YZ[Plus(H,V)],ZX[Plus(H,V)])

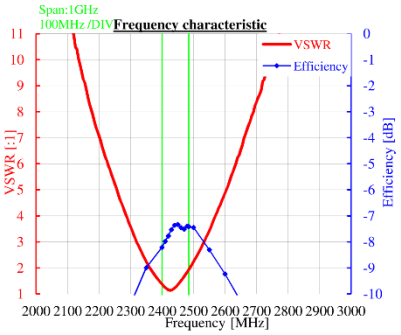

Radiation pattern

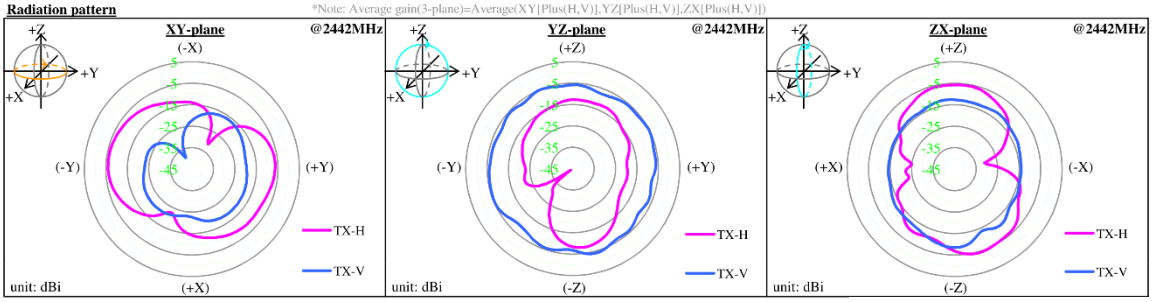

About this Application Note

・This Application Note has been prepared as a reference material to help obtaining the antenna performance mounted on BLE module better while it is not guaranteed or assured to obtain better communication performance and distance.
・This product “BLE module” has been certified and matching circuit constant for antenna within module cannot be changed when ambient environment condition changes. The product must be re-certified when matching circuit constant is changed.

Copyright 2025 KAGA FEI Co., Ltd.

Downloaded from Arrow.com.

11.Design guide

11.1. Power Up Sequence

VCC_NRF power supply rise time (0V to 1.7V) must not exceed 60ms.

11.2.Recommended Power Circuit

VCC_NRF is the main power supply (1.7 – 3.6V) for this module. The supply voltage range of VCC_NRF is 1.7V to 3.6V in both of LDO and DCDC mode. In case of the power supply voltage fluctuation by the load change is large, the module may not function properly. If an external regulator is used, the load change characteristic should be good in order to keep stable voltage as possible when the current is change.

11.3.Battery operation

When using a small battery (e.g. CR2032), a large capacitor (e.g.100uF low leakage capacitor) should be placed near the battery. This will reduce the voltage drop especially when the module is operated at low temperatures

11.4.Pattern Design Guide

11.4.1.Power Supply System

Power supply bypass capacitors should be placed close to the VCC_NRF pin of the module. The VCC_NRF trace should be greater than 0.5mm and a bigger a via diameter is recommended.

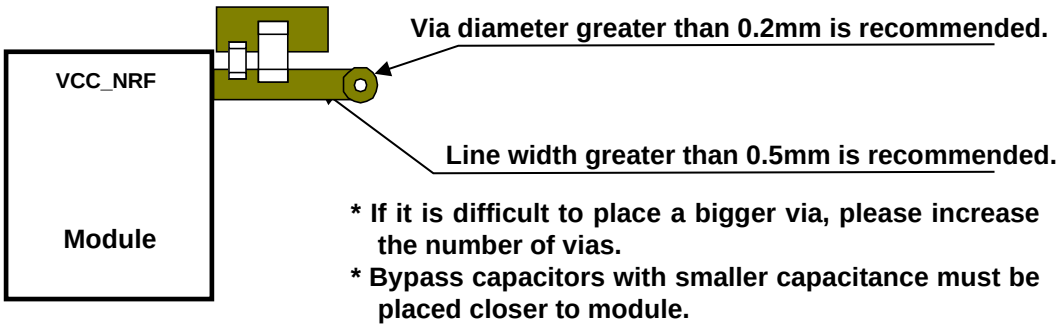

11.4.2.Bypass Capacitor Layout

A parallel combination of a small capacitance (about 10pF) and a large capacitance (1uF to 10uF) is recommended for bypass capacitors. The GND of the bypass capacitor should be placed close to an adjacent module GND to ensure the shortest closed loop.

11.4.3.GND Pattern

Power supply bypass capacitor GND should be placed in proximity of module GND. Wide GND area must be provided to ensure isolation for each layer.

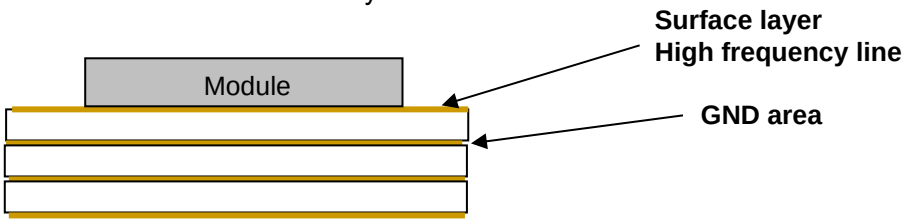

GND pattern of each layer should be connected to GND area with large number of via.

Copyright 2025 KAGA FEI Co., Ltd.

Downloaded from Arrow.com.

11.5.Reference information

ES2832 Series may be able to develop the extremely slim product such as pen, chopsticks, glasses frames, ring, slim wrist band and so on.

Example of our demonstration board. (Not for sale)

3.65mm x 35.6mm

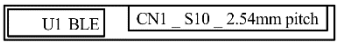

2-Layers board

L/S : 100/100(um)
TH/Land : 250/500(um)
Solder resist opening : +50(um)
Board outline to Circuit pattern : 300(um)
Board outline to TH : 625(um)

Even in the case of a small product, please take the GND pattern that kept strong in any layer for antenna performance.

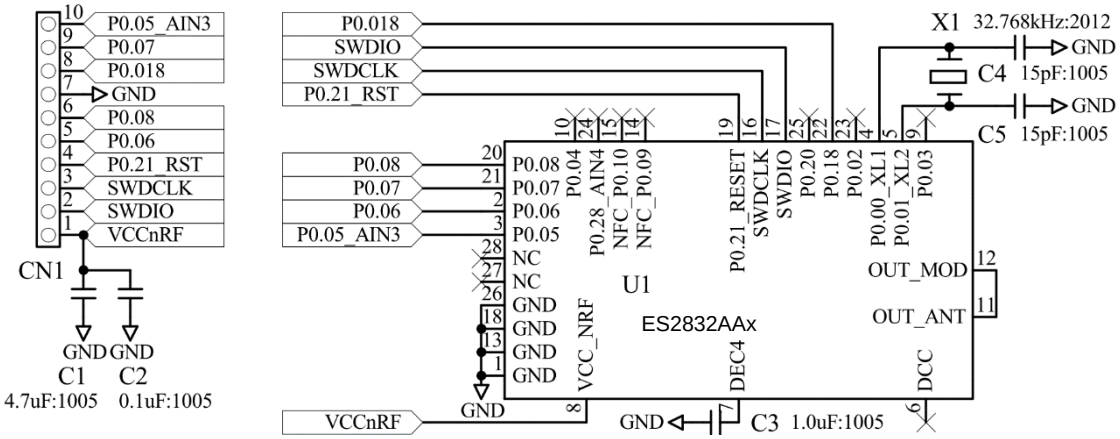

Copyright 2025 KAGA FEI Co., Ltd.

Downloaded from Arrow.com.

12.Notes

32kHz Clock

This module does not installed 32.768kHz crystal. In case of operating without external crystal, please modify sdk_config.h in order to enable internal 32.768kHz RC oscillator (32k RCOSC).
The content may change depending on the SDK you use.

```
--sdk_config.h-- (In case of SDK17.1)
// <o> CLOCK_CONFIG_LF_SRC    - LF Clock Source
// <0=> RC
// <1=> XTAL
// <2=> Synth
// <131073=> External Low Swing
// <196609=> External Full Swing
#ifndef CLOCK_CONFIG_LF_SRC
#define CLOCK_CONFIG_LF_SRC 0
#endif
// </h>
//==========================================================
// <h> Clock - SoftDevice clock configuration
//==========================================================
// <o> NRF_SDH_CLOCK_LF_SRC    - SoftDevice clock source.
// <0=> NRF_CLOCK_LF_SRC_RC
// <1=> NRF_CLOCK_LF_SRC_XTAL
// <2=> NRF_CLOCK_LF_SRC_SYNTH
#ifndef NRF_SDH_CLOCK_LF_SRC
#define NRF_SDH_CLOCK_LF_SRC 0
#endif
// <o> NRF_SDH_CLOCK_LF_RC_CTIV - SoftDevice calibration timer interval.
#ifndef NRF_SDH_CLOCK_LF_RC_CTIV
#define NRF_SDH_CLOCK_LF_RC_CTIV 16
#endif
// <o> NRF_SDH_CLOCK_LF_RC_TEMP_CTIV - SoftDevice calibration timer interval under constant temperature.
// <i> How often (in number of calibration intervals) the RC oscillator shall be calibrated
// <i>    if the temperature has not changed.
#ifndef NRF_SDH_CLOCK_LF_RC_TEMP_CTIV
#define NRF_SDH_CLOCK_LF_RC_TEMP_CTIV 2
#endif
// <o> NRF_SDH_CLOCK_LF_ACCURACY    - External clock accuracy used in the LL to compute timing.
// <0=> NRF_CLOCK_LF_ACCURACY_250_PPM
// <1=> NRF_CLOCK_LF_ACCURACY_500_PPM
// <2=> NRF_CLOCK_LF_ACCURACY_150_PPM
// <3=> NRF_CLOCK_LF_ACCURACY_100_PPM
// <4=> NRF_CLOCK_LF_ACCURACY_75_PPM
// <5=> NRF_CLOCK_LF_ACCURACY_50_PPM
// <6=> NRF_CLOCK_LF_ACCURACY_30_PPM
// <7=> NRF_CLOCK_LF_ACCURACY_20_PPM
// <8=> NRF_CLOCK_LF_ACCURACY_10_PPM
// <9=> NRF_CLOCK_LF_ACCURACY_5_PPM
// <10=> NRF_CLOCK_LF_ACCURACY_2_PPM
// <11=> NRF_CLOCK_LF_ACCURACY_1_PPM
#ifndef NRF_SDH_CLOCK_LF_ACCURACY
#define NRF_SDH_CLOCK_LF_ACCURACY 1
#endif
```

Note that when you choose to use the RC oscillator, it will add around 2uA average current consumption compared to a 20ppm external crystal.
ANT specification requires +/-50ppm accuracy for 32.768kHz clock. There is a possibility that the internal RC oscillator does not meet to the specification.

Copyright 2025 KAGA FEI Co., Ltd.

Downloaded from Arrow.com.

Precautions

■ Please conduct validation and verification of our products in actual condition of mounting and operating environment before using our products.

■ The products listed in this Specification are intended for use in general electronic equipment (e.g., AV equipment, OA equipment, home electric appliances, office equipment, information and communication equipment including, without limitation, mobile phone, and PC). Please be sure to contact KAGA FEI for further information before using the products for any equipment which may directly cause loss of human life or bodily injury (e.g., transportation equipment including, without limitation, automotive powertrain control system, train control system, and ship control system, traffic signal equipment, disaster prevention equipment, medical equipment classified as Class I, II or III by IMDRF, highly public information network equipment including, without limitation, telephone exchange, and base station).
Please do not incorporate our products into any equipment requiring high levels of safety and/or reliability (e.g., aerospace equipment, aviation equipment, medical equipment classified as Class IV by IMDRF, nuclear control equipment, undersea equipment, military equipment).
When our products are used even for high safety and/or reliability-required devices or circuits of general electronic equipment, it is strongly recommended to perform a thorough safety evaluation prior to use of our products and to install a protection circuit as necessary.
Please note that unless you obtain prior written consent of KAGA FEI, KAGA FEI shall not be in any way responsible for any damages incurred by you or third parties arising from use of the products listed in this Specification for any equipment requiring inquiry to KAGA FEI or prohibited for use by KAGA FEI as described above.

■ Information contained in this Specification is intended to convey examples of typical performances and/or applications of our products and is not intended to make any warranty with respect to the intellectual property rights or any other related rights of KAGA FEI or any third parties nor grant any license under such rights.

■ Please note that the scope of warranty for our products is limited to the delivered our products themselves and KAGA FEI shall not be in any way responsible for any damages resulting from a fault or defect in our products.

■ The contents of this Specification are applicable to our products which are purchased from our sales offices or authorized distributors (hereinafter “KAGA FEI’s official sales channel”). Please note that the contents of this specification are not applicable to our products purchased from any seller other than KAGA FEI’s official sales channel.

■ The contents of this Specification are applied in preference to any agreement between you and KAGA FEI or KAGA FEI's official sales channel (e.g., supply and purchase agreement, quality assurance agreement).

■ You will have deemed accepted the contents of this Specification upon usage of our products.

■ Caution for Export
Some of our products listed in this specification may require specific procedures for export according to "U.S. Export Administration Regulations" and other applicable regulations.

Copyright 2025 KAGA FEI Co., Ltd.

Downloaded from Arrow.com.