DWG. NO.	HH-3642
ISSUE	REVISIONS
A	SCREW DESCRIPTION ADDED 7-9-15

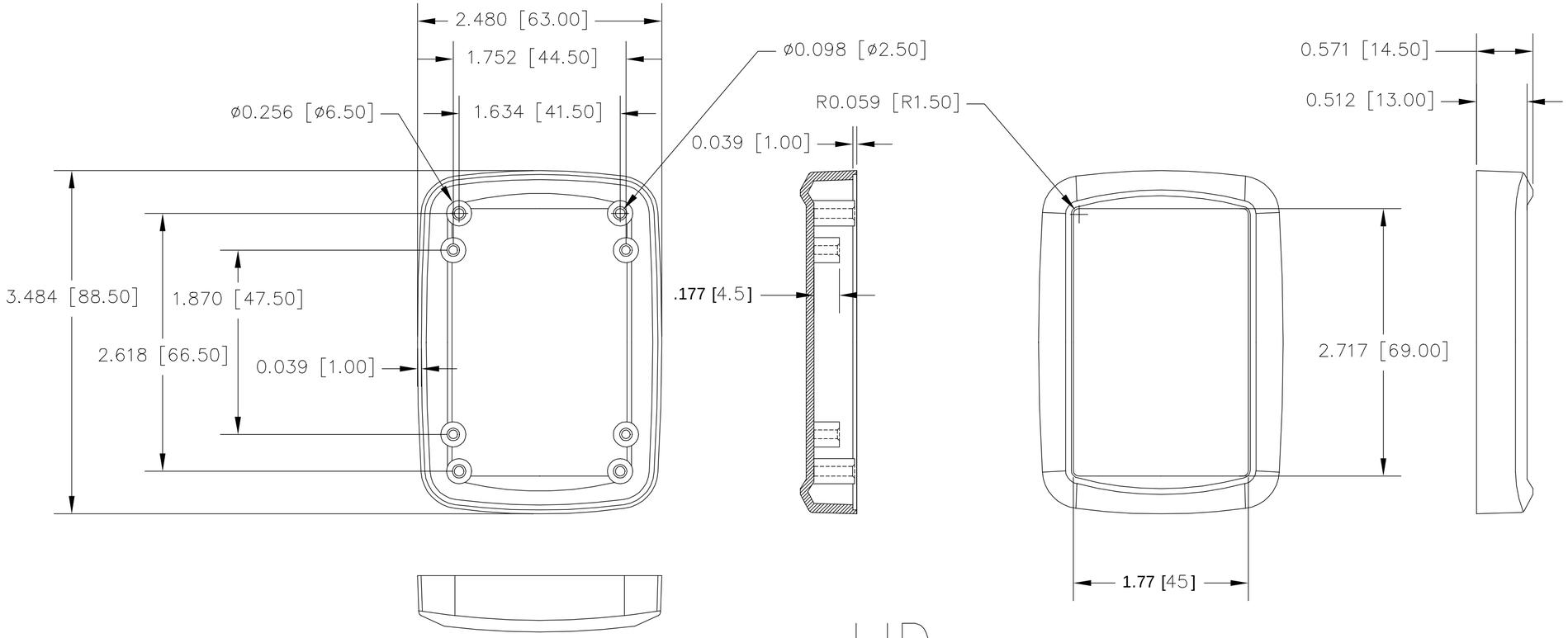

LID

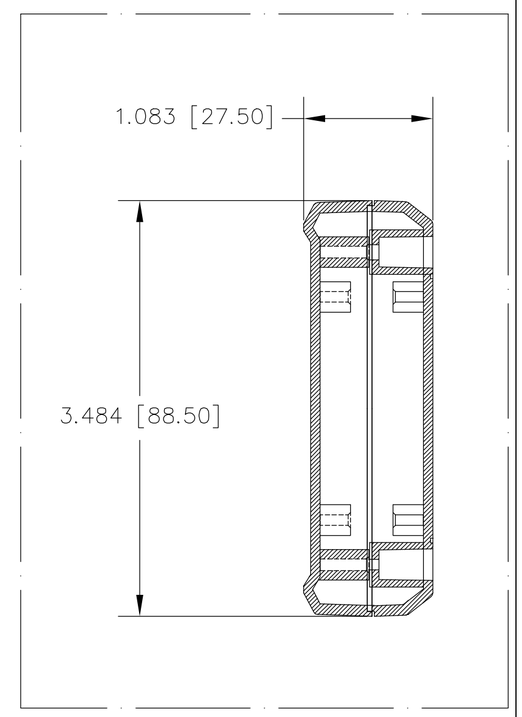

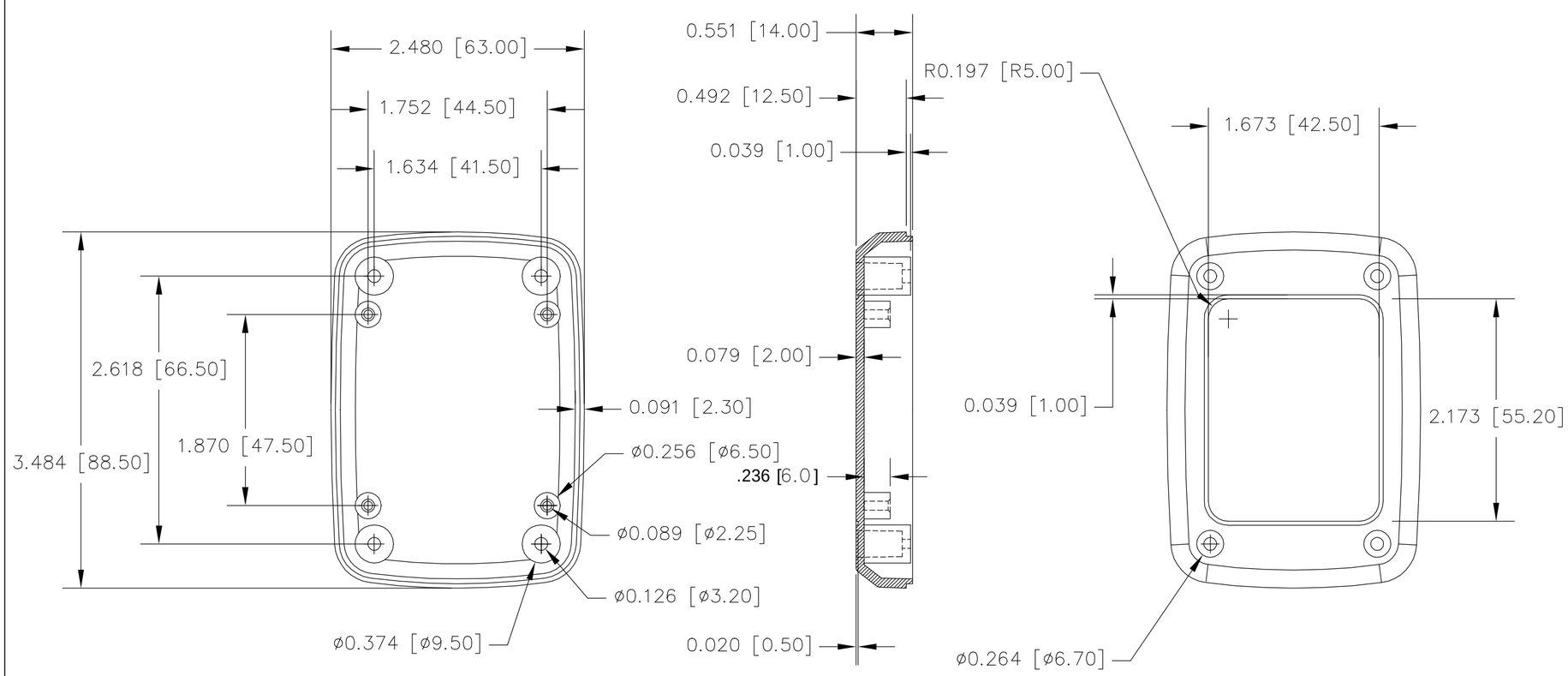

BASE

MATERIAL : FLAME RETARDANT OF ABS (UL94-V0)
COLOR: BLACK
FINISH:
SHELL EXTERIOR SURFACES ARE TEXTURED.
RECESSED AREAS ON EXTERIOR ARE SMOOTH.
FOUR (4) INTERNAL BOSSES ON EACH SHELL ARE DESIGNED TO TRAP PCB BETWEEN ASSEMBLED SHELL HALVES.
FOUR (4) #4-24 x .375 LG. SCREWS (BLACK) ARE SUPPLIED FOR ASSEMBLING SHELL HALVES
ALL DIMENSIONAL TOLERANCES ARE +/-.015

QTY.	USED ON

TOLERANCES:
±.005 BETWEEN HOLE CENTERS
±.015 FROM SHEARED EDGE
±.032 FROM A BENT SURFACE
±.063 BETWEEN ASSEMBLED SURFACES
UNLESS OTHERWISE SPECIFIED

ITEM	REQ'D.	PART NO.	DESCRIPTION
MAT:	NOTED	SCALE:	NAME:
FINISH:	BLACK	BUD	HAND-HELD BOX STYLE P 3.47 X 2.48 X 1.08
DR. RD	10-13-08	BUD INDUSTRIES, INC.	
CH.		WILLOUGHBY, OHIO	DWG. NO. HH-3642
APP.			

Downloaded from Arrow.com.