Downloaded from Arrow.com.

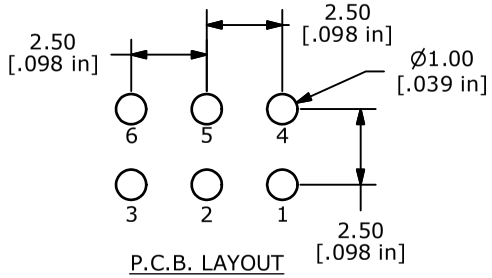

P.C.B. LAYOUT

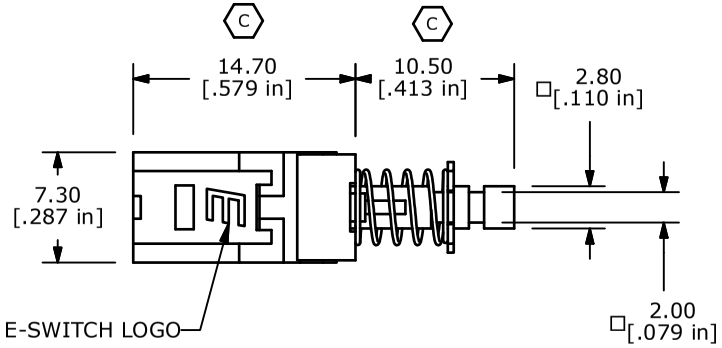

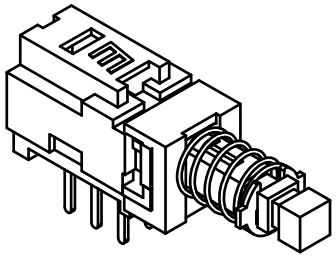

ISOMETRIC

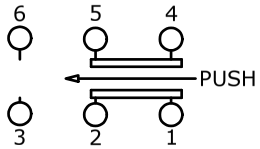

CIRCUIT DIAGRAM

NOTES:

1. ALL DIMENSIONS IN MM [INCH]
2. GENERAL TOLERANCE: X.X=± 0.4
   X.XX=± 0.25
3. TERM. NOS. FOR REFERENCE ONLY.
4. RATING 0.1A @30V DC
5. ▲ MATERIALS:
   CONTACT/TERMINALS: SILVER PLATE
   HOUSING: PBT UL94HB
   BASE: PA66 UL94HB (B)
   ACTUATOR: POM
6. CONTACT RESISTANCE: 100 MILLI-OHM (INITIAL) (C)
7. ▲ TIMING: NON-SHORTING
8. OPERATING FORCE: 230± 50GF
9. TRAVEL: LATCHING
   2MM TO LOCK
   3MM OVERALL
10. ELECTRICAL LIFE: 10000 CYCLES
11. OPERATING TEMP: -20˚C TO +70˚C (C)
12. ▲ DENOTES CRITICAL PARAMETER.
13. 2002/95/EC (ROHS) COMPLIANT

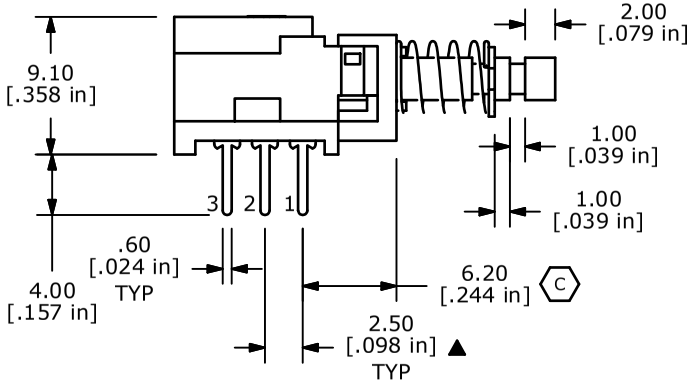

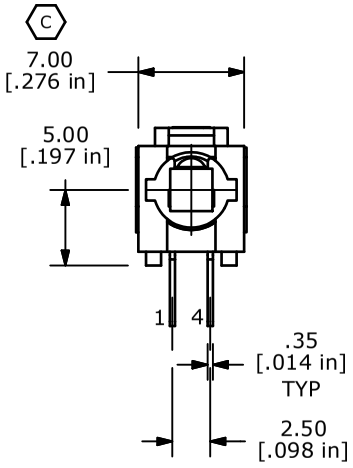

REV	PCR NO	DESCRIPTION	DATE	BY
E	19670	UPDATE CIRCUIT DIAGRAM	2/10/11	BGL
D	15669	EDIT PC MOUNT DIM, ADD ROHS	1/9/06	PH
C	14893	CHANGED NOTES AND DIMENSIONS	5/3/05	JB
B	14790	ADD MATERIALS TO NOTES	3/29/05	AR
A	14691	RELEASED FOR PRODUCTION	2/14/05	AR

THE INFORMATION CONTAINED IN THIS DOCUMENT IS PROPRIETARY TO E-SWITCH AND IS NOT TO BE COPIED OR TRANSFERRED

E-SWITCH®

TITLE PBH2UEENAGX

SCALE	DATE	DR	DWG	REV
2:1	2/2/2005	AR	Q960000	E