CONN SIZE	FILTER DESIGNATION	FILTER CIRCUITS	CAPACITANCE VALUE	CAPACITANCE TOLERANCE	3 dB MAX CUTOFF FREQ (MHz)	DIELECTRIC WITHSTANDING VOLTAGE	CONTACT RATING	CONTACT RESIST	WORKING VOLTAGE DC −55°C TO +125°C	MINIMUM INSERTION LOSS–DECIBELS (dB) 5 MHz	10 MHz	20 MHz	50 MHz	100 MHz	200 MHz	500 MHz	1 GHz
50	E	Pi	4000pF	+100% −0%	0.8	150V	5A	.01 OHM MAX	50V	8	13	20	35	48	61	76	80

MARKING

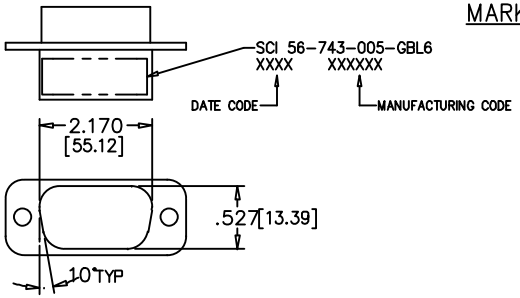

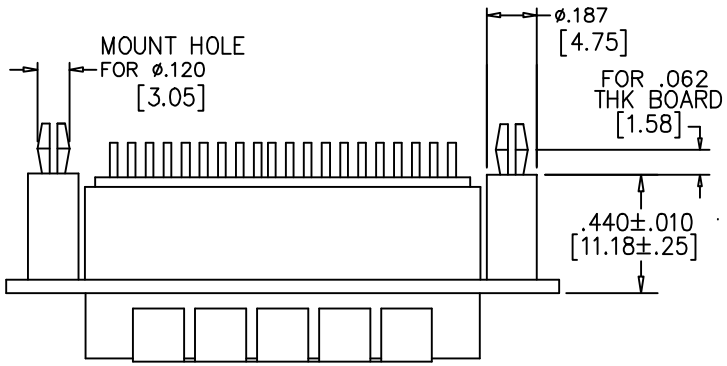

FILTER ELEMENT LOCATION

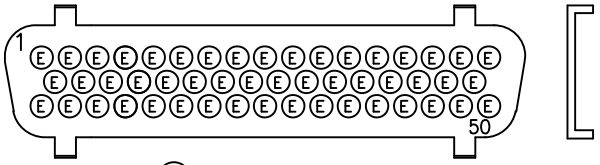

(E) = 51-820-803

ENGAGEMENT VIEW

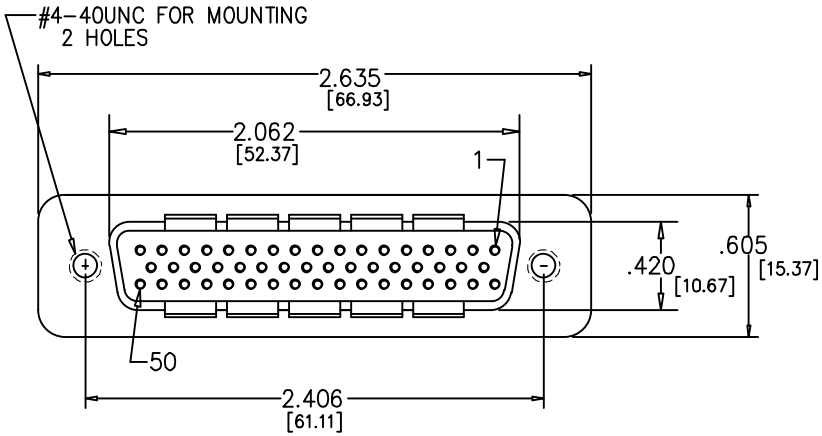

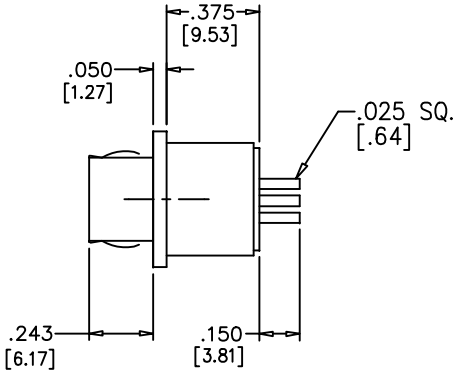

NOTES:

1. SHELL: NICKEL PLATED ZINC
2. INSULATORS: UL94V-0
3. CONTACTS: COPPER ALLOY: .000030 GOLD IN PIN CONTACT MATING AREAS
4. RADIO FREQUENCY GROUND CONTACT FROM THE CONNECTOR SHELL TO THE MATING CONNECTOR IS ASSURED BY A COAXIAL SPRING CLIP

THIS DOCUMENT CONTAINS PROPRIETARY INFORMATION AND IS COPYRIGHTED. EXCEPT WITH THE WRITTEN PERMISSION OF SPECTRUM CONTROL INC., OR ITS SUBSIDIARIES, SUCH INFORMATION SHALL NOT BE PUBLISHED OR DISCLOSED TO OTHERS OR USED FOR ANY PURPOSE AND THIS DOCUMENT SHALL NOT BE DUPLICATED IN WHOLE OR IN PART.

REV. NO.	CHANGE NOTICE
O	CN 53839-ENG

UNLESS OTHERWISE SPECIFIED DIMENSIONS ARE IN INCHES.
CAD SCALE: FULL
THIRD ANGLE PROJECTION

TOLERANCES UNLESS OTHERWISE SPECIFIED
Fractions ± 1/64
Dec. .xx±
Dec. .xxx± .015
Angles ±0° 30'
CODE IDENT. NO. 0LSP2

SPECTRUM CONTROL INC.
FAIRVIEW PENNSYLVANIA

Dwn. KAUFFMAN
Date 4-6-10
Engr. GRUNAUER
Sheet 1 of 1

Description: SKT – PCB
50L FILTERED CONNECTOR

B 56-743-005-GBL6

Quality Products From The Specialists In Electro-Magnetic Compatibility

Downloaded from Arrow.com.