We connect and protect

Mounting Plate for 19" Case and Subrack, 84 HP, 220 mm Board Length

CATALOG NUMBER

34562-752

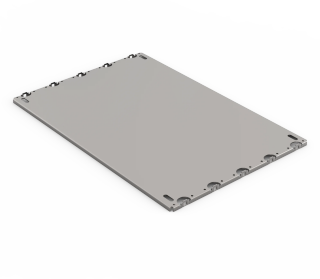

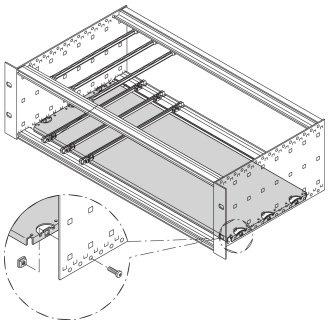

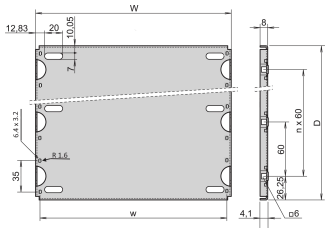

Material	HP	W	w	D
34562745	28	146,87	137,16	112,50
34562749	28	146,87	137,16	172,50
34562753	28	146,87	137,16	232,50
34562757	28	146,87	137,16	292,50
34562746	42	217,99	208,28	112,50
34562750	42	217,99	208,28	172,50
34562754	42	217,99	208,28	232,50
34562758	42	217,99	208,28	292,50
34562747	63	324,67	314,96	112,50
34562751	63	324,67	314,96	172,50
34562755	63	324,67	314,96	232,50
34562759	63	324,67	314,96	292,50
34562748	84	431,35	421,64	112,50
34562752	84	431,35	421,64	172,50
34562756	84	431,35	421,64	232,50
34562760	84	431,35	421,64	292,50
34562870	84	431,35	421,64	352,50
34562871	84	431,35	421,64	412,50

Mounting plate for heavy components or proprietary electronic assemblies. Suitable for RatiopacPRO/-AIR, CompacPRO and EuropacPRO.

Guide rails Type 4,4” and type strengthened cannot be used in combination with a mounting plate. Top / bottom cover which will be inserted into the groove of the light (type L) horizontal rails cannot be used in combination with a mounting plate.

CERTIFICATIONS

RoHS COMPLIANT

Downloaded from Arrow.com.

FEATURES

For assembly of heavy components

Mounting plate, full width: The mounting plate is as wide as the subrack/system case and is fixed to the side panels

Mounting plate, partial width: The partial width mounting plate fixed to the side panel by means of an assembly strip

The chassis plate can´t be combined with EMC top- / bottom covers

PRODUCT ATTRIBUTES

Rack Width: 84HP

Package Quantity: 1

Material: Aluminum

Product Family: EuropacPRO; CompacPRO; RatiopacPRO; PropacPRO

Product Type: Mounting Plate

Works With: Subracks

Net Weight: 0.37kg

ADDITIONAL PRODUCT DETAILS

Please order assembly kit for mounting plate separately.

Other versions on request.

Fixing strips required for partial width, please order separately.

WARNING

nVent products shall be installed and used only as indicated in nVent's product instruction sheets and training materials. Instruction sheets are available at www.nvent.com and from your nVent customer service representative. Improper installation, misuse, misapplication or other failure to completely follow nVent's instructions and warnings may cause

North America
All locations
+1.763.422.2661
Chat with us:
nvent.com/schroff

Europe
Straubenhardt, Germany
+49.7082.794.0
Betschdorf, France
+33.3.88.90.64.90
Warsaw, Poland
+48.22.209.98.35
Assago, Italy
+39.02.932.7141
Chat with us:
nvent.com/schroff

Asia
Shanghai, China
+86.21.2412.6943
Qingdao, China
+86.532.8771.6101
Singapore
+65.6768.5800
Shin-Yokohama, Japan
+81.45.476.0271
Chat with us:
nvent.com/schroff

Middle East & India
Dubai, United Arab Emirates
+971.4.378.1700
Bangalore, India
+91.80.6715.2001
Istanbul, Turkey
+90.216.250.7374
Chat with us:
nvent.com/schroff

Our powerful portfolio of brands:

CADDY ERICO HOFFMAN ILSCO SCHROFF TRACHTE

©2026 nVent. All nVent marks and logos are owned or licensed by nVent Services GmbH or its affiliates. All other trademarks are the property of their respective owners. nVent reserves the right to change specifications without notice.

This document is system-generated.

Downloaded from Arrow.com.