THIS COPY IS PROVIDED ON A RESTRICTED BASIS AND IS NOT TO BE USED IN ANY WAY DETRIMENTAL TO THE INTERESTS OF PANDUIT CORP.

E

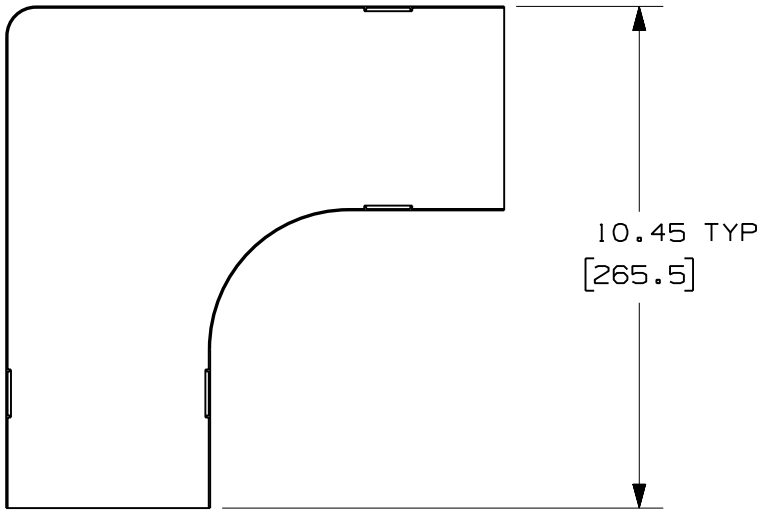

PANDUIT PART NUMBER	WEIGHT
FRA4X4	1.10 LB/EACH (500g/EACH)

I

J NOTES:

1. SEE CURRENT CATALOG FOR ADDITIONAL PART SUFFIXES TO INDICATE COLOR AND/OR PACKAGE QUANTITY.
2. THE FIBER-DUCT 4x4 HORIZONTAL RIGHT ANGLE FITTING IS DESIGNED WITH A MINIMUM 2" (50.8) BEND RADIUS TO PROTECT FIBER OPTIC CABLES.
3. DIMENSIONS IN PARENTHESES ARE IN METRIC.

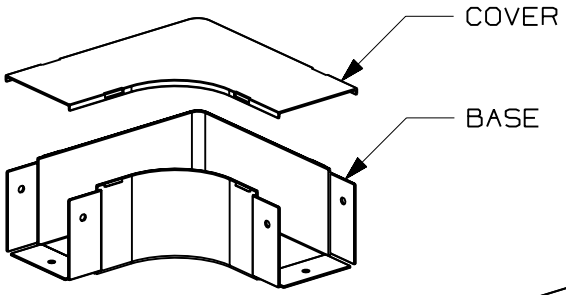

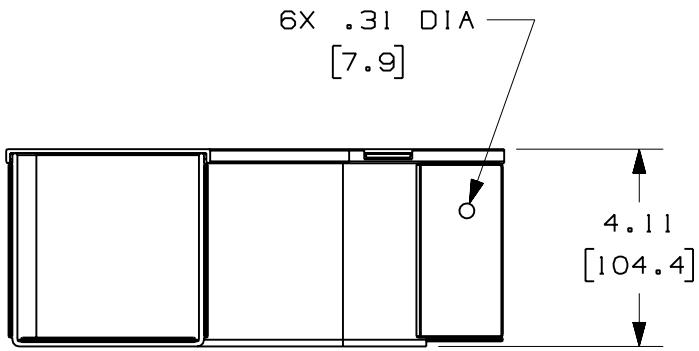

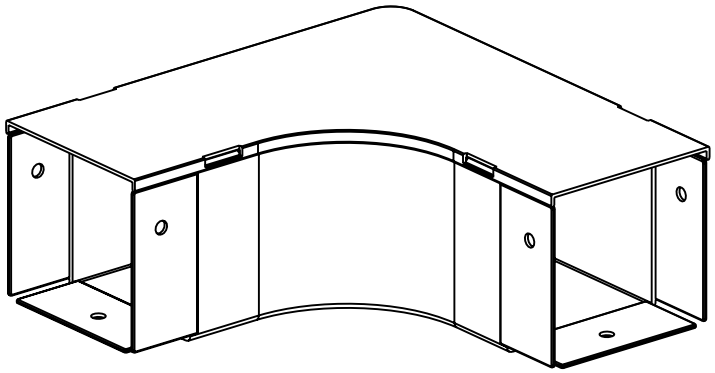

ENG. REF.: D35245CE_DC_FRA4X4_03.prt

CAD FILENAME/LAYERS F FRA4X4.pdf

PANDUIT CORP TINLEY PARK, ILLINOIS

FIBER-DUCT 4x4 HORIZONTAL RIGHT ANGLE FITTING (FRA4X4)
G CUSTOMER DRAWING

UNLESS OTHERWISE SPECIFIED, DIMENSIONAL TOLERANCES ARE:
(.X) ± (.XXX) ±
(.XX) ±.03 (.8) ANGLES ±

UNLESS OTHERWISE SPECIFIED, ALL DIMENSIONS ARE GIVEN IN INCHES, THIRD ANGLE PROJECTION.

DRAWN BY JBA
MAT'L: ABS
SCALE NONE
DATE 4-2-97
DRAWING NO. 35245-31
DWG A
CHK'D CEF
H
SIZE

REV	DATE	BY	CHK	DESCRIPTION	ECN	-	R	CUST	SUP	GMBH
-	--------	---	--	J. REVISED GENERAL NOTES. I. REVISED PART WEIGHT.	--------		--	--		
-	--------	---	--	H. REVISED MATERIAL. G. REVISED DRAWING TITLE.	--------		--	--		
3	12-28-06	MSO	RN	F. REVISED CAD FILENAME. E. REVISED AND REDRAWN.	35245-31		RN	RN		

Downloaded from Arrow.com.