MICRO SWITCH
FREEPORT ILLINOIS U S A
A DIVISION OF HONEYWELL
FED MFG CODE 81929

SWITCH-TOGGLE

CATALOG LISTING
4TL144 SERIES
CHART 1

THIS DRAWING COVERS A PROPRIETARY ITEM AND IS THE PROPERTY OF MICRO SWITCH A DIVISION OF HONEYWELL. THIS DRAWING IS NOT TO BE COPIED OR USED WITHOUT THE APPROVAL OF MICRO SWITCH.

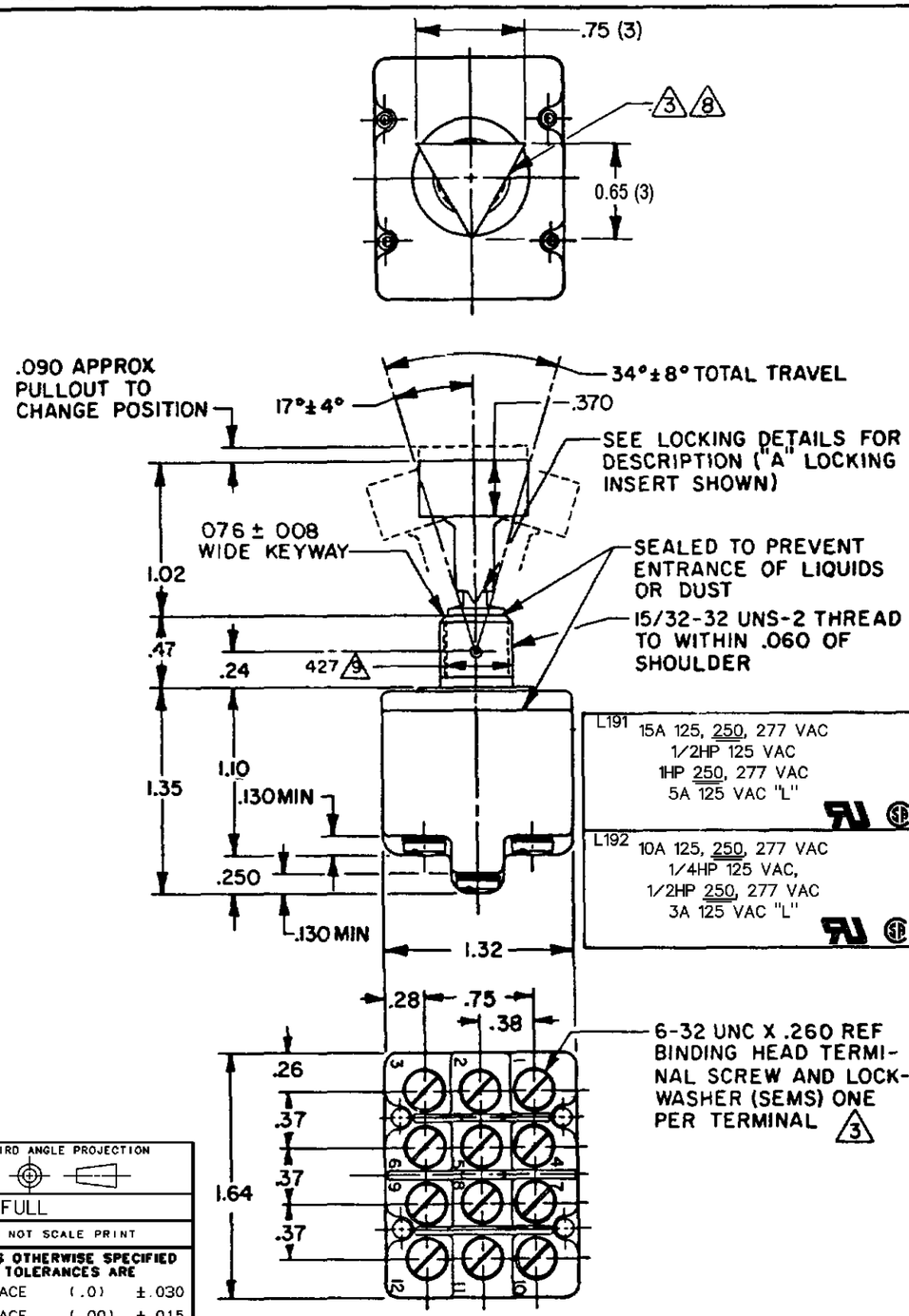

L191 15A 125, 250, 277 VAC
1/2HP 125 VAC
1HP 250, 277 VAC
5A 125 VAC "L"

L192 10A 125, 250, 277 VAC
1/4HP 125 VAC,
1/2HP 250, 277 VAC
3A 125 VAC "L"

CATALOG LISTING 6	AVAILABLE LOCKING COMBINATIONS FOR CONFIGURATION SEE LETTERING DETAILS	7 CIRCUIT MADE WITH TOGGLE LEVER IN: KEYWAY SIDE (1-2, 4-5) (7-8, 10-11)	CENTER (1-2, 4-5) (7-8, 10-11)	OPPOSITE KEYWAY (2-3, 5-6) (8-9, 11-12)	MILITARY RATING (AMPS) RESISTIVE LOAD DC VOLTS 28	125	250	AC VOLTS 125	250	LAMP LOAD 28 VDC	125 VAC	IND. LOAD 28 VDC	125 VAC
4TL144-1	A,B,D,E,F,G,H,J,K,L,M,N,P	ON	OFF	ON									
4TL144-2	D, F, G	OFF	NONE	ON									
4TL144-3	D, F, G	ON	NONE	ON	20	.75	.5	15	6	5	4	12	15
4TL144-21	E, F, K, M	NONE	OFF	ON	(REFER TO L191 FOR UL RATING)								
4TL144-31	E, F, K, M	NONE	ON	ON									
4TL144-4	F	MOM OFF	NONE	ON									
4TL144-5	E, F, K, L, M, N	MOM ON	OFF	ON									
4TL144-6	F	MOM ON	NONE	OFF									
4TL144-7	E, L, N	MOM ON	OFF	MOM ON	18	.75	.5	11	6	4	2	10	8
4TL144-8	F	MOM ON	NONE	ON	(REFER TO L192 FOR UL RATING)								
4TL144-51	E	NONE	ON	MOM ON									
4TL144-61	E	MOM ON	OFF	NONE									

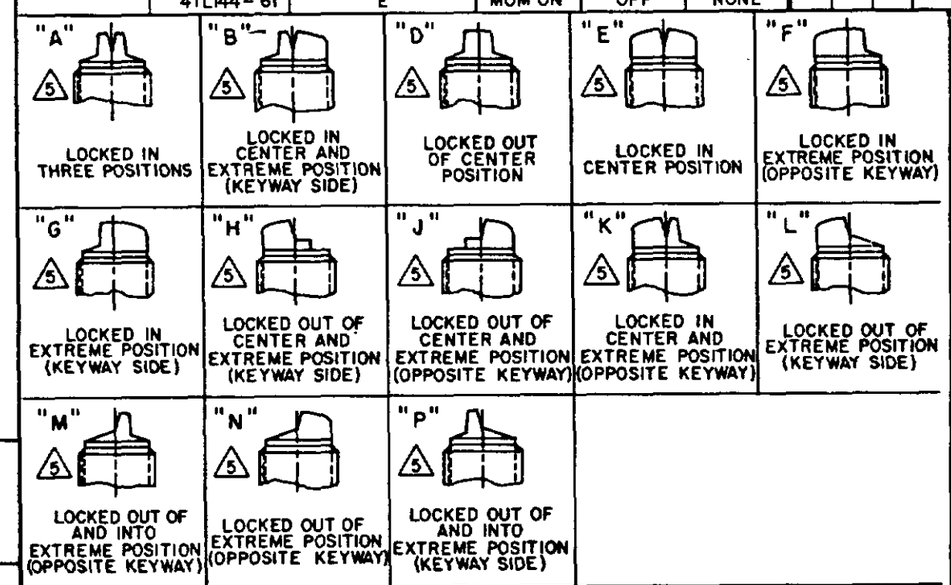

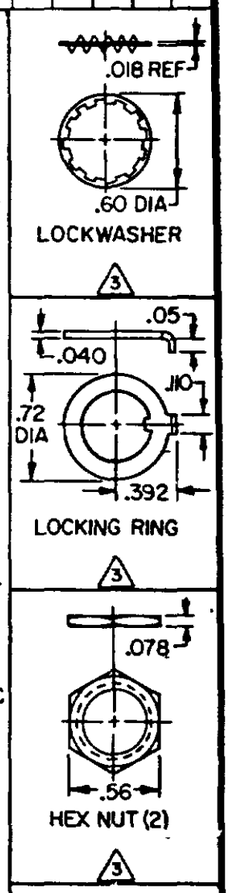

NOTES

1 - SWITCHES ARE CAPABLE OF WITHSTANDING A TEMPERATURE OF 160°F CONTINUOUSLY AT FULL RATED LOAD

2 - CIRCUIT DESIGNATION AND MICRO SWITCH CATALOG LISTING MARKED ON SIDE OF SWITCH

3 FURNISHED UNASSEMBLED

4 - FOR TERMINAL COVER SEE MICRO SWITCH CAT. LIST. 5PA9

5 KEYWAY SHOWN ON LEFT SIDE

6 SUFFIX LETTER MUST BE ADDED FOR DESIRED TYPE OF TOGGLE LOCKING. SEE CHART FOR AVAILABLE LOCKING COMBINATIONS

7 APPLIES ONLY TO "ON" AND "MOMENTARY ON" POSITIONS

8 REMOVABLE LEVER CAP HELD IN PLACE BY A PLASTIC LOCKING INSERT IN CAP THREADS

9 FROM BOTTOM OF KEYWAY TO MAJOR DIA OF 15/32 THREAD

THIRD ANGLE PROJECTION

SCALE FULL

DO NOT SCALE PRINT

UNLESS OTHERWISE SPECIFIED TOLERANCES ARE

ONE PLACE	(.0)	±.030
TWO PLACE	(.00)	±.015
THREE PLACE	(.000)	±.005
ANGLES		±

WEIGHT .23 LBS MAX

CATALOG LISTING 4TL144 SERIES CHART 1
PAGE 1 OF 1
ISSUE 4 M
RELEASE NO CO-78497
REPLACES 4TL144 SERIES

REVISIONS
A CO-81150 J A K 19 JUN 95
B CO-94443 J J A 13 OCT 99
C 0003226 RS 10FEB04

CHECK	CHECK	CHECK	CHECK	CHECK	DRAWN	
10FEB04	MDM	13 JUL 94	KAG		11 JUL 94	SAV

FORMTEK

Downloaded from Arrow.com.