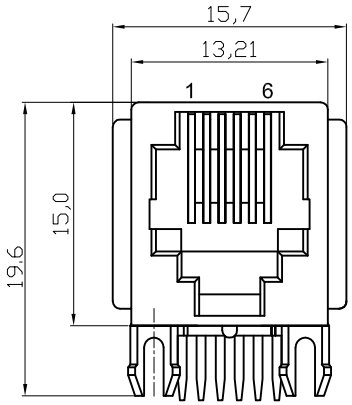

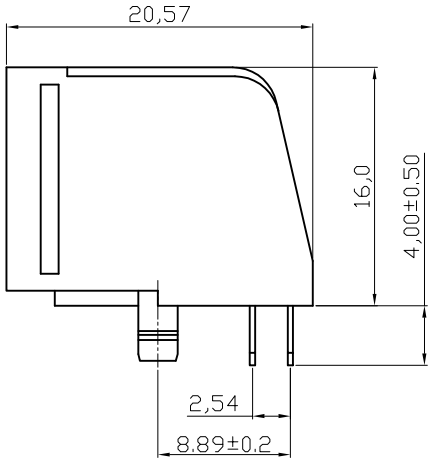

NOTES:

ELECTRICAL:

1. VOLTAGE RATING : 125 VAC MIN.
2. CURRENT RATING : 1.5 AMP MIN.
3. CONTACT RESISTANCE : 50 MILLIOHMS MAX.
4. INSULATION RESISTANCE : 1000 MEGOHMS MIN @ 500 VDC.
5. DIELECTRIC STRENGTH : 1000 VAC 60Hz, 1MIN.

MECHANICAL:

1. HOUSING MATERIAL : HIGH TEMP. UL94V-0.
2. CONTACT MATERIAL : PHOSPHOR BRONZE t=0.35mm.
2. 3. PLATING : 6u" GOLD ON CONTACT AREA 100~200u" TIN ON SOLDER AREA ALL OVER 30~50u" NICKEL.
4. OPERATING LIFE : 750 CYCLES MIN.
5. PCB RETENTION PRE-SOLDER : 1 LB MIN.
6. PCB RETENTION POST-SOLDER: 10 LBS MIN.

ENVIRONMENTAL:

1. STORAGE : -40°C TO +85°C.
2. OPERATION : -40°C TO +85°C.
3. WAVE SOLDER TEMPERTURE : 255°C TO 265°C 5~10 SECOND.

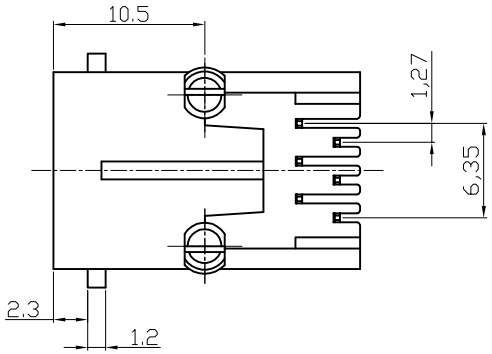

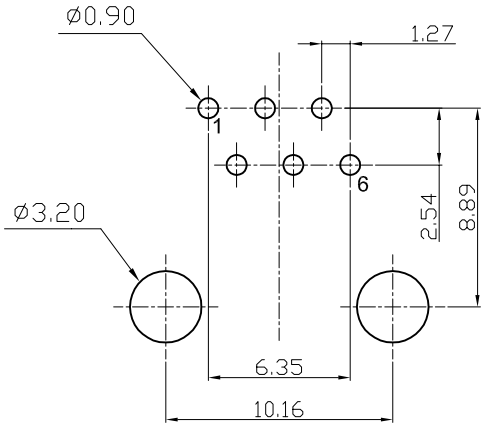

PC Board Layout
Component Side Shown

RoHS compliant
Unit: mm

File No.: E345352

Scale	Free
TOLERANCE	
.X	±0.20
.XX	±0.15
.XXX	±0.10
DIM	TOL
Angle	±5°

Id.	Modification	Date	Name
2	Update the contact plating	25.08.2015	Amy
1	Drawn	02.07.2009	Dean

	Date	Name
Drawn	02.07.2009	Dean
Approved	25.08.2015	Amy

ASSMANN WSW components

Customer-No.

ASSMANN WSW-No. A-20041

Drawing-No. ASS 0484 CO

rev02

Replace

SHEET

Downloaded from Arrow.com.