DATE	REV	ECN	APP'D. BY
3-8-16	C9	10591	TRM
8-25-17	C10	11072	TRM

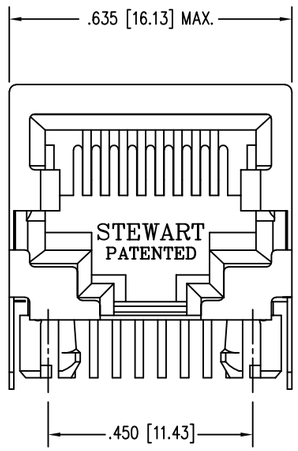

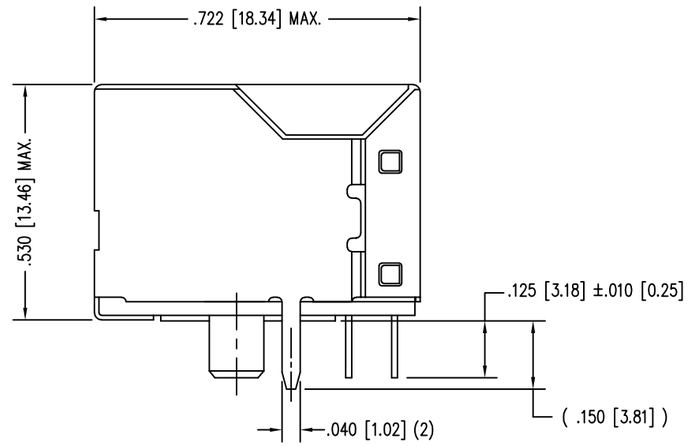

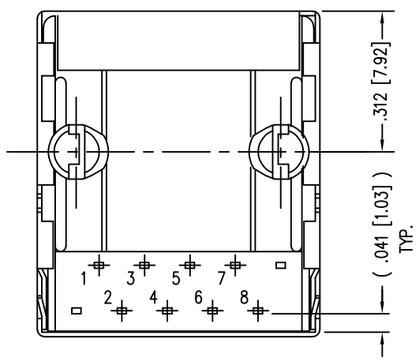

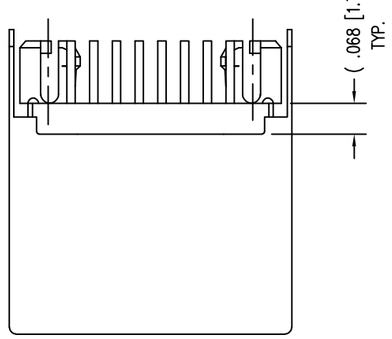

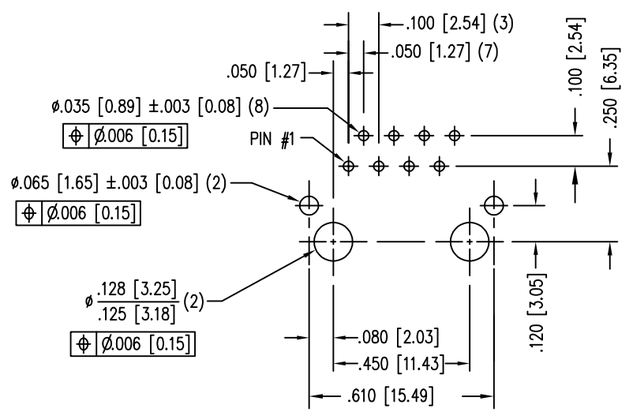

P.C.B. RECOMMENDED HOLE LAYOUT
SEEN FROM COMPONENT SIDE

ALL CENTERLINE DIMENSIONS ARE BASIC.

NOTES:

1. CONNECTOR MATERIALS:
   HOUSING: THERMOPLASTIC UL94 V-0
   CONTACTS/SHIELD: COPPER ALLOY
   SHIELD PLATING: NICKEL OR TIN
   CONTACT PLATING: SELECTIVE GOLD IN CONTACT AREA
   SEE CHART FOR PART NUMBER
2. DIMENSIONS AND TOLERANCES COMPLY WITH TIA-1096 STANDARD.
3. FOR PRODUCT SPECIFICATION SEE PR022-01

CONTACT PLATING IN MATING AREA	PART NUMBER
50 MICRO-INCHES [1.27um]	SS-640810S-A-NF-A75
30 MICRO-INCHES [0.76um]	SS-640810S-A-NF-A111

RoHS

THIRD ANGLE PROJECTION

DO NOT SCALE DRAWING

DRAWING IS SUBJECT TO CHANGE WITHOUT NOTICE

DIMENSIONS: INCHES [METRIC]

UNLESS OTHERWISE SPECIFIED TOLERANCES ARE ±.005 [0.13] ANGLES ARE ± 1°

SHEET NO. 1 OF 1

stewart CONNECTOR a bel group
11118 Susquehanna Trail South
Glen Rock, PA 17327-9199
(717) 235-7512
http://www.stewartconnector.com

TITLE: EIGHT POSITION, EIGHT CONTACT, SHIELDED SHORT VERSION JACK NON-FLANGED

THIS DRAWING AND THE SUBJECT MATTER SHOWN THEREON ARE CONFIDENTIAL AND THE PROPRIETARY PROPERTY OF STEWART CONNECTOR AND SHALL NOT BE REPRODUCED, COPIED, OR USED IN ANY MANNER WITHOUT PRIOR WRITTEN CONSENT OF STEWART CONNECTOR. ONE OR MORE U.S. PATENTS MAY APPLY TO THIS PRODUCT. FOR DETAILS, PLEASE VISIT: HTTP://BELFUSE.COM/STEWART/STEWART_PATENTS/

DRN BY:	SAR	DATE	2-7-03
APPD BY:	RGC	DATE	2-25-03
DWG NO.	CT640006	REV.	C10

AutoCAD

Downloaded from Arrow.com.