Connector Location A

Connector Location B

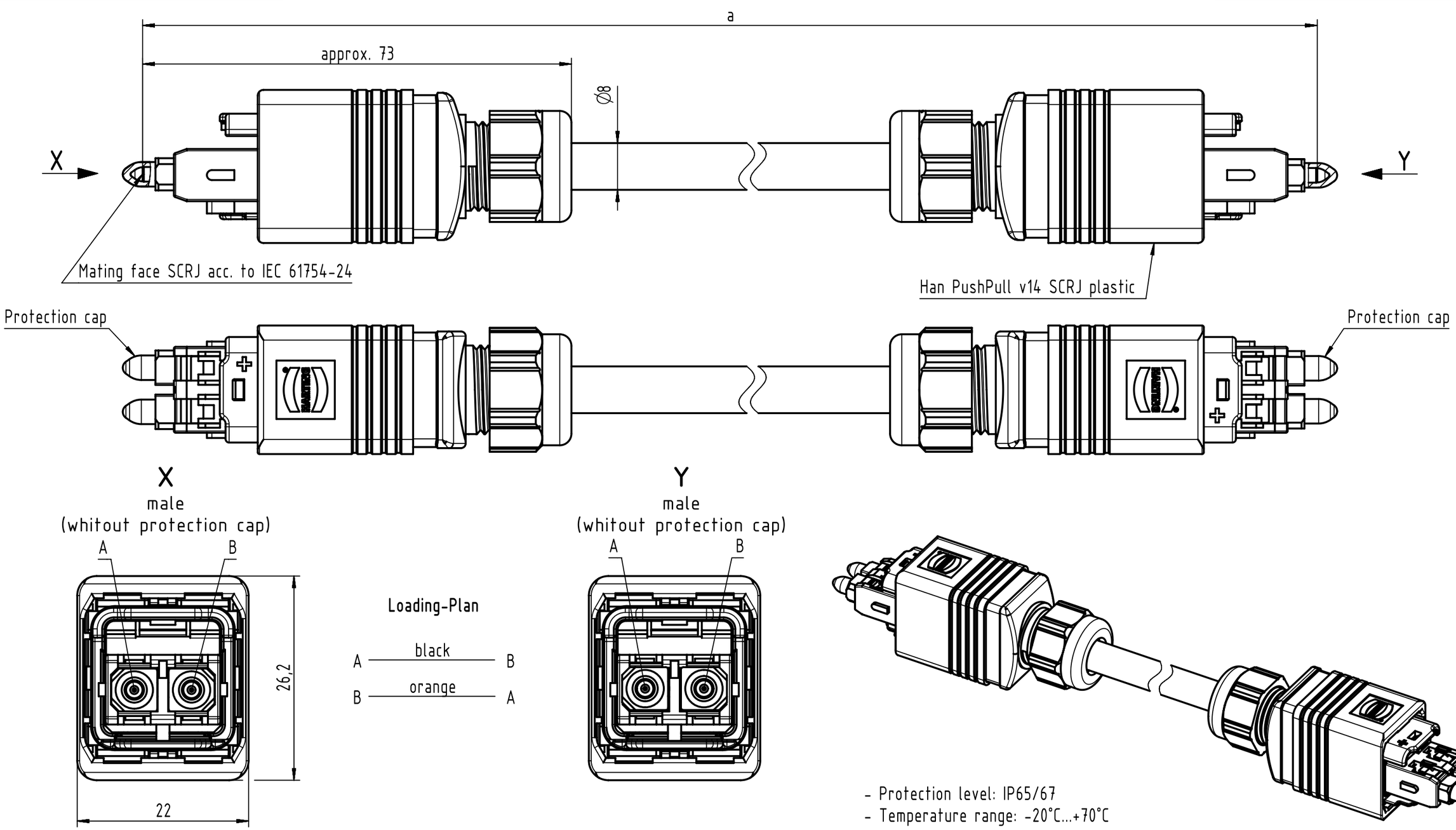

- Protection level: IP65/67
- Temperature range: -20°C...+70°C

Cont. no.	Part no.	Type of cable	Dim. a[m]
5	33532110200001	POF FO cable, 2-channel, 2P980/1000, PUR, green	20
4	33532110100001		10
3	33532110050001		5
2	33532110020001		2
1	33532110010001		1

All Dimensions in mm | Tech. Character. | Free size tol. | According to production drawing

All rights reserved

Department HCS - RO

HARTING Customised Solutions

D-32339 Espelkamp

Created by	Inspected by	Standardisation	Date	State
COSTEA	STOCHECIC	MUNTEANV	2018-10-11	Final Release

Title: PushPull v14 POF Assembly

Doc-Key / ECM-Nr.: 100225657/UGD/005/D 500000141147

Type: TB | Number: 3353211XXX0001 | Rev.: D | Page: 1/1

A3

Downloaded from Arrow.com.