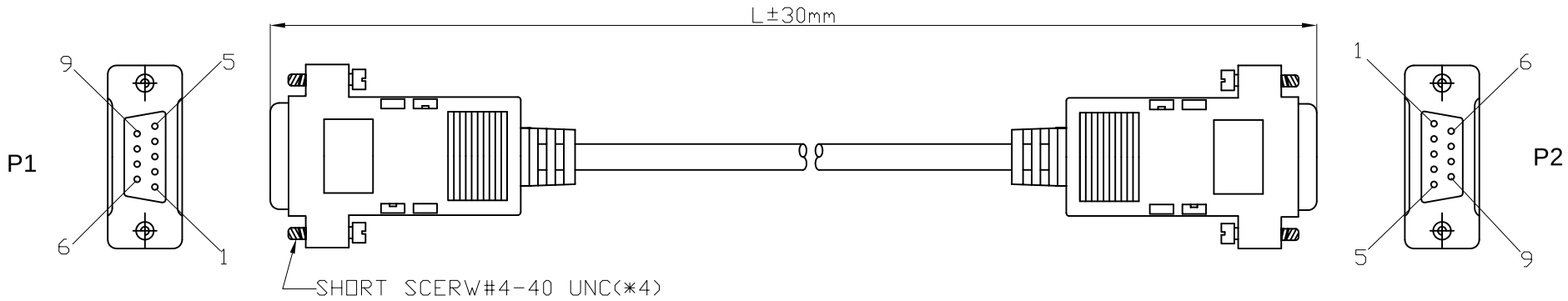

NOTES:

1.CABLE: NON-UL 28AWG(7/0.127)*8C+DRAIN WIRE+AL-FOIL/MYLAR
PVC JACKET , COLOR:BEIGE.OD:∅5.0±0.2mm(GLL)

2.CONNECTOR:
P1&P2:DB9P FEMALE GOLD FLASH CONTACT
NICKEL PLATED SHELL .

3.HOOD: ASS'Y TYPE , COLOR:BEIGE.

4.ELECTRICAL TEST:
100% OPEN SHORT MIS WIRE TEST
CONTACT RESISTANCE 3 OHMS MAX .
INSULATION RESISTANCE 20M OHMS MIN .

5.PACKING:SEE P-0039 REV.C PACKING DRAWING
PACKING TYPE: DB VP3
(HANKING SIZE MUST BE SMALLER THAN PACKING)

EAN Code:
4016032080633

ASSMANN WSW P/N	LENGTH
AK-610100-018-E	1.8 M
AK-610100-030-E	3.0 M

PIN OUT

P1	1	2	3	4	5	7	8	9	SHELL
P2	4	3	2	1	5	8	7	9	SHELL

DRAIN

RoHS compliant

Scale	FREE
TOLERANCE	
X.	±X
X.X	±X
X.XX	±X
DIM	TOL
X.°	±X°
X.X°	±X°
Angle	TOL

Id.	Modification	Date	Name
②	P/N changed	20.02.2015	A.Plate
①	Drawn	01.07.2009	Rale

	Date	Name
Drawn	01.07.2009	Rale
Approved	01.07.2009	Meng

ASSMANN WSW components

Customer-No.

ASSMANN WSW-No. AK-610100-xxx-E

Drawing-No. ASS 3619 CA

rev02

Replace

Sheet

Downloaded from Arrow.com.