PRODUCT CATALOG

HIROSE ELECTRIC CO.,LTD.

RM-W Series

HRS Original Multi-Purpose, Wide Range of Positions, Miniature, Waterproof Connectors

Waterproof

Compact

Wide Variation



Oct.1.2026 Copyright 2026 HIROSE ELECTRIC CO., LTD. All Rights Reserved.

Product Page
https://www.hirose.com/en/product/series/RM-W

Mar. 2024

Downloaded from Arrow.com.

Overview

The RM-W series, developed by Hirose, features miniature waterproof connectors designed for high performance in a compact form.
Its locking mechanism uses a threaded coupling style, offering excellent waterproof reliability.

Features

1. Wide Variations

Choose the best fit for your needs from a diverse selection of plugs and receptacles within the RM-W series.

Plugs : Straight Plug, Straight Low Height Plug, and Right Angle Plug

Receptacles :
・Fixing Methods : Jam Nut Type and Screw Tightening Type with Square Flange
・The Jam nut Type : Front or Rear Panel Mount

No. of Positions :
2, 4, 8, 10, 12, 15, 20 and 40

Contact Plating : Gold or Silver

Assembly Type (Straight Plug/RM15W)

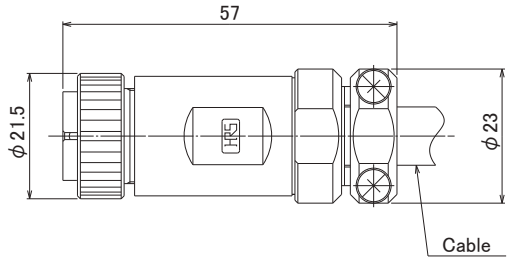

(Low-Height Plug)

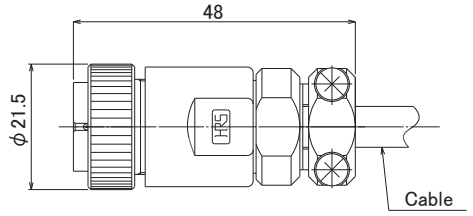

Assembly Type (Right Angle Plug/RM15W)

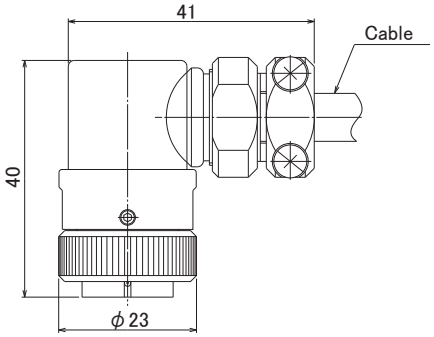

2. Waterproof Design

Achieves IPX7 and IPX8 waterproof standards when fully mated.
IPX7 certified for immersion at 1 meter for 30 minutes, and IPX8 certified for immersion at 2 meters for 14 days, ensuring durability in wet conditions.

Oct.1.2026 Copyright 2026 HIROSE ELECTRIC CO., LTD. All Rights Reserved.

Downloaded from Arrow.com.

3. Flexible Cable Arrangements

Right-angle plug assemblies allow for 360-degree cable exit in any direction, providing versatility in cable management.

Flexible Cable Arrangements

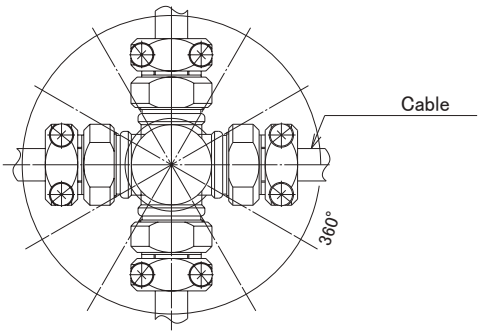

Oct.1.2026 Copyright 2026 HIROSE ELECTRIC CO., LTD. All Rights Reserved.

Downloaded from Arrow.com.

Product Specifications

Size RM15WT

Rated Current	2 and 4pos. : 10A 8, 10 and 12pos. : 5A	Operating Temperature (Note 1)	-25 to +85℃
Rated Voltage	2pos. : 600V AC, 840V DC 4 and 8pos. : 500V AC and 700V DC 10 and 12pos. : 350V AC, 490V DC	Storage Temperature (Note 2)	-10 to +60℃

Item	Specifications	Conditions
Contact Resistance	2 and 4pos. : 2mΩ Max. 8, 10 and 12pos. : 4mΩ Max.	Measured at 1A DC
Insulation Resistance	1,000MΩ Min.	Measured at 500V DC
Withstanding Voltage	No insulation breakdown	2pos. : 1,800V AC 4 and 8pos. : 1,500V AC 10 and 12pos. : 1,000V AC for 1 min.
Vibration Resistance	No electrical discontinuity of 10μs Min.	Frequency : 10 to 55Hz/ and 55 to10Hz/ 10 cycles in single amplitude of 0.75 mm of the 3 directions
Shock Resistance	No electrical discontinuity of 10μs Min.	Acceleration of 490m/s^2, duration of 11ms sine half-wave waveform, 3 cycles in each of the 6 axes
Mating Durability	Contact Resistance 2 and 4pos. : 4mΩ Max. 8, 10 and 12pos. : 8mΩ Max.	2,000 times (Measure Contact Resistance)
Temperature Cycle	Insulation Resistance : 100MΩ Min.	Temperature : -55℃ to Normal Temperature → +85℃ → Normal Temperature Time : 30 → 2 to 3 → 30 → 2 to 3 (Minutes) 5 cycles
Humidity Resistance (Steady state)	Insulation Resistance : 100MΩ Min. (Drying)	96 hours at temperature of 40℃ and humidity of 90% to 95%
Waterproof	No water immersion into connector	Mated : Immersed in 1.8 meters water depth for 48 hours

Oct.1.2026 Copyright 2026 HIROSE ELECTRIC CO., LTD. All Rights Reserved.

Downloaded from Arrow.com.

Size RM21WT to RM31WT

Rated Current	5A	Operating Temperature (Note 1)	-25 to +85℃
Rated Voltage	40pos. : 600V AC, 840V DC 15pos. : 500V AC, 700V DC 20pos. : 350V AC, 490V DC	Storage Temperature (Note 2)	-10 to +60℃

Item	Specifications	Conditions
Contact Resistance	4mΩ Max.	Measured at 1A DC
Insulation Resistance	1,000MΩ Min.	Measured at 500V DC
Withstanding Voltage	No insulation breakdown	40pos. : 1,800V AC 15pos. : 1,500V AC 20pos. : 1,000V AC for 1 min.
Vibration Resistance	No electrical discontinuity of 10μs Min.	Frequency : 10 to 55Hz/ and 55 to10Hz/ 10 cycles in single amplitude of 0.75 mm of the 3 directions
Shock Resistance	No electrical discontinuity of 10μs Min.	Acceleration of 490m/s^2, duration of 11ms sine half-wave waveform, 3 cycles in each of the 6 axes
Mating Durability	Contact Resistance : 8mΩ Max.	2,000 times (Measure Contact Resistance)
Temperature Cycle	Insulation Resistance : 100MΩ Min.	Temperature : -55℃ to Normal Temperature → +85℃ → Normal Temperature Time : 30 → 2 to 3 → 30 → 2 to 3 (Minutes) 5 cycles
Humidity Resistance (Steady state)	Insulation Resistance : 100MΩ Min. (Drying)	96 hours at temperature of 40℃ and humidity of 90% to 95%
Waterproof	No water immersion into connector	Mated : Immersed in 1.8 meters water depth for 48 hours

Note 1 : Includes temperature rise caused by the current flow.
Note 2 : The term "storage" refers to products stored for long period of time prior to mounting and use.
Operating temperature range covers non-conducting condition of installed connectors in storage, shipment or during transportation.

Oct.1.2026 Copyright 2026 HIROSE ELECTRIC CO., LTD. All Rights Reserved.

Downloaded from Arrow.com.

Materials / Finish

Size RM15WT

Item	Material	Color / Finish
Body	Zinc Alloy / Brass	Chromium / Nickel Plating
Insulator	PPS	Black
Contact	Brass / Phosphorous Bronze / Copper Alloy	Silver / Gold Plating
Gasket	SIR (Black or Red) / NBR (Gray)	-

Note : Do not mix different contact plating.

Size RM21WT to RM31WT

Item	Material	Color / Finish
Body	Brass	Chromium Plating / Nickel Plating
Insulator	PPS	Black
Contact	Brass / Copper Alloy	Silver Plating
Gasket	Chloroprene Rubber / SIR	Black

Note : Do not mix different contact plating.

Oct.1.2026 Copyright 2026 HIROSE ELECTRIC CO., LTD. All Rights Reserved.

Downloaded from Arrow.com.

Product Number Structure

Please utilize the below part number chart when selecting.

■ Size RM15WT

Connector

RM 15 W T P## - 2 P (##)
❶ ❷ ❶ ❸ ❹ ❺ ❻ ❼

Cap

RM 15 T P - C (##)
❶ ❷ ❸ ❹ ❽ ❼

❶ Series Name	RM-W	❺ No. of Pos.	2, 4, 8, 10 and 12
❷ Shell Size	Outer diameter of the case of the plug mating part	❻ Contact Type	P : Male Contact S : Female Contact
❸ Lock Type	T : Screw Lock	❼ Other Specifications	A two-digit number is added to indicate other specifications.
❹ Connector Type	P : Plug LP : Right Angle Plug R : Receptacle (## : Type Change Classification Symbol by The Same Classification)	❽ Accessory Type	C : Cap

Note : The cap of the RM-W series is the same as that of the RM series. It can be used as a waterproof cap.

■ Size RM21WT to RM31WT

Connector

RM 31 W T P## - 40 S (##)
❶ ❷ ❶ ❸ ❹ ❺ ❻ ❼

Cap

RM 21 T P - C (##)
❶ ❷ ❸ ❹ ❽ ❼

Strain Relief

RM 21 W T P - CP (10) (##)
❶ ❷ ❶ ❸ ❹ ❽ ❾ ❼

❶ Series Name	RM-W	❻ Contact Type	P : Male Contact S : Female Contact
❷ Shell Size	Outer diameter of the case of the plug mating part	❼ Other Specifications	In the case of specifications change other than the above, two digits will be added.
❸ Lock Type	T : Screw Lock	❽ Accessory Type	C : Cap CP : Cable Clamp
❹ Connector Type	P : Plug R : Receptacle (## : Type Change Classification Symbol by The Same Classification)	❾ Cable Clamp Type and Applicable Cable Diameter	( ) with Number : No Screw Type Without ( ) : With Screw Type The Number : Cable Diameter
❺ No. of Pos.	15, 20 and 40		

Note : The cap of the RM-W series is the same as that of the RM series. It can be used as a waterproof cap.

Oct.1.2026 Copyright 2026 HIROSE ELECTRIC CO., LTD. All Rights Reserved.

Downloaded from Arrow.com.

Size RM15WT

Plugs - Straight Long Back Shell (Assembly Type)



RM15WTPZA-10S(81)

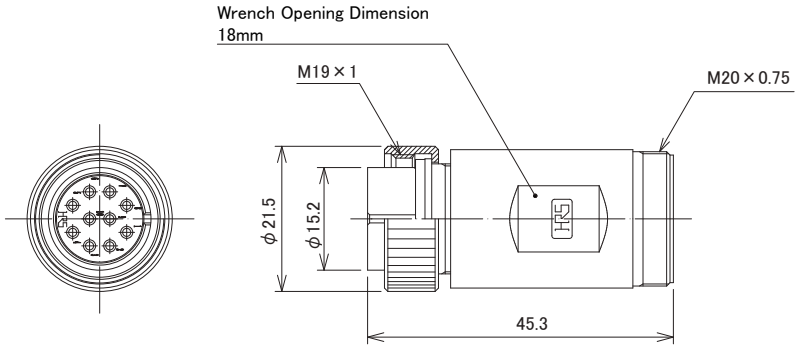

(Representative Example)

Unit : mm

Part No.	HRS No.	No. of Pos.	Purchase Unit
RM15WTPZA-2P(8#)	CL0109-1734-5-8#	2	40pcs per tray
RM15WTPZA-4P(8#)	CL0109-1735-8-8#	4	
RM15WTPZA-8P(8#)	CL0109-1736-0-8#	8	
RM15WTPZA-10P(8#)	CL0109-1737-3-8#	10	
RM15WTPZA-12P(8#)	CL0109-1738-6-8#	12	
RM15WTPZA-2S(8#)	CL0109-1729-5-8#	2	
RM15WTPZA-4S(8#)	CL0109-1730-4-8#	4	
RM15WTPZA-8S(8#)	CL0109-1731-7-8#	8	
RM15WTPZA-10S(8#)	CL0109-1732-0-8#	10	
RM15WTPZA-12S(8#)	CL0109-1733-2-8#	12	

[Specification No.]
(81) : Silver Plating
(82) : Gold Plating

Oct.1.2026 Copyright 2026 HIROSE ELECTRIC CO., LTD. All Rights Reserved.

Downloaded from Arrow.com.

Applicable Strain Reliefs

External Strain Relief + Internal, Self-Tightening



JR16WCC-10(72)

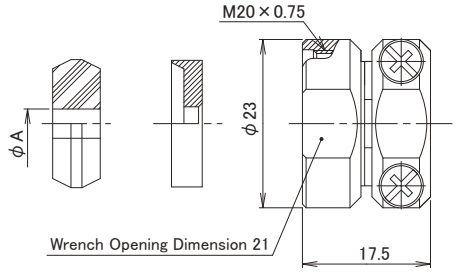

(Representative Example)

Unit : mm

Part No.	HRS No.	ϕA	Purchase Unit
JR16WCC-6(72)	CL0114-2053-9-72	6	
JR16WCC-8(72)	CL0114-2054-1-72	8	
JR16WCC-10(72)	CL0114-2055-4-72	10	
JR16WCC-11(72)	CL0114-2154-6-72	11	
JR16WCC-12(72)	CL0114-2056-7-72	12	

Internal, Self Tightening



JR16WCCA-10(72)

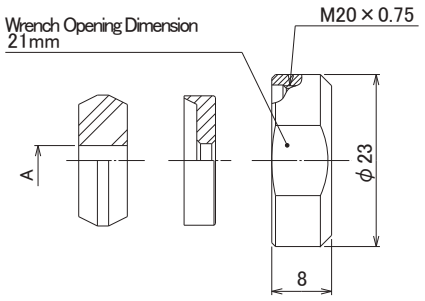

(Representative Example)

Unit : mm

Part No.	HRS No.	A	Purchase Unit
JR16WCCA-6(72)	CL0114-2077-7-72	6	20pcs per bag
JR16WCCA-8(72)	CL0114-2078-0-72	8	10pcs per bag
JR16WCCA-10(72)	CL0114-2079-2-72	10	20pcs per bag
JR16WCCA-11(72)	CL0114-2155-9-72	11	
JR16WCCA-12(72)	CL0114-2080-1-72	12	

Note 1 : Please use cable jacket diameter : A ± 0.2mm.
Note 2 : When using the self-tightening strain relief verify the cable pull force requirements.

Oct.1.2026 Copyright 2026 HIROSE ELECTRIC CO., LTD. All Rights Reserved.

Downloaded from Arrow.com.

Plugs - Straight Short Back Shell (Assembly Type)



RM15WTPZ-10S(81)

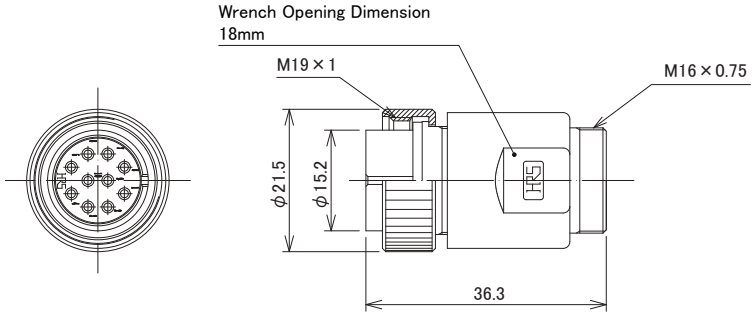

(Representative Example)

Unit : mm

Part No.	HRS No.	No. of Pos.	Purchase Unit
RM15WTPZ-2P(8#)	CL0109-1616-9-8#	2	40pcs per tray
RM15WTPZ-4P(8#)	CL0109-1617-1-8#	4	
RM15WTPZ-8P(8#)	CL0109-1618-4-8#	8	
RM15WTPZ-10P(8#)	CL0109-1619-7-8#	10	
RM15WTPZ-12P(8#)	CL0109-1620-6-8#	12	
RM15WTPZ-2S(8#)	CL0109-1611-5-8#	2	
RM15WTPZ-4S(8#)	CL0109-1612-8-8#	4	
RM15WTPZ-8S(8#)	CL0109-1613-0-8#	8	
RM15WTPZ-10S(8#)	CL0109-1614-3-8#	10	
RM15WTPZ-12S(8#)	CL0109-1615-6-8#	12	

[Specification No.]
(81) : Silver Plating
(82) : Gold Plating

Oct.1.2026 Copyright 2026 HIROSE ELECTRIC CO., LTD. All Rights Reserved.

Downloaded from Arrow.com.

Applicable Strain Reliefs

External Strain Relief + Internal, Self-Tightening



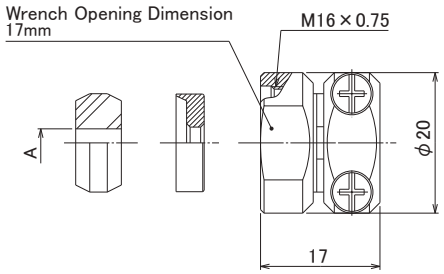

(Representative Example)

JR13WCC-10(72)

Unit : mm

Part No.	HRS No.	A	Purchase Unit
JR13WCC-4(72)	CL0114-2045-0-72	4	20pcs per bag
JR13WCC-5(72)	CL0114-2046-3-72	5	
JR13WCC-6(72)	CL0114-2047-6-72	6	
JR13WCC-7(72)	CL0114-2048-9-72	7	
JR13WCC-8(72)	CL0114-2049-1-72	8	
JR13WCC-9(72)	CL0114-2050-0-72	9	
JR13WCC-10(72)	CL0114-2051-3-72	10	

Internal, Self Tightening

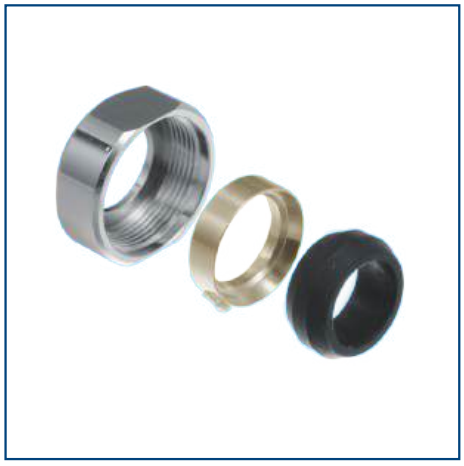

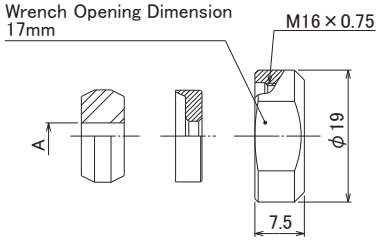

(Representative Example)

JR13WCCA-10(72)

Unit : mm

Part No.	HRS No.	A	Purchase Unit
JR13WCCA-4(72)	CL0114-2069-9-72	4	20pcs per bag
JR13WCCA-5(72)	CL0114-2070-8-72	5	10pcs per bag
JR13WCCA-6(72)	CL0114-2071-0-72	6	
JR13WCCA-7(72)	CL0114-2072-3-72	7	
JR13WCCA-8(72)	CL0114-2073-6-72	8	
JR13WCCA-9(72)	CL0114-2074-9-72	9	
JR13WCCA-10(72)	CL0114-2075-1-72	10	

Note 1 : Please use cable jacket diameter : A ± 0.2mm.
Note 2 : When using the self-tightening strain relief verify the cable pull force requirements.

Oct.1.2026 Copyright 2026 HIROSE ELECTRIC CO., LTD. All Rights Reserved.

Downloaded from Arrow.com.

Plugs - Right Angle (Assembly Type)



RM15WTLP-10S(81)

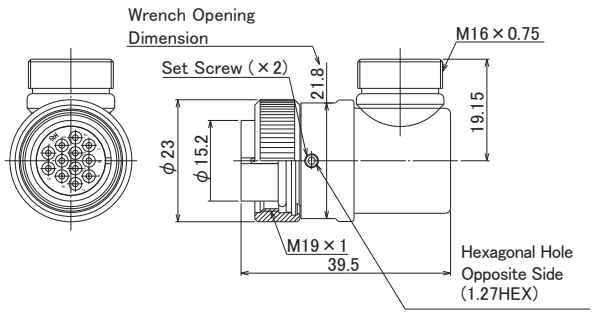

(Representative Example)

Unit : mm

Part No.	HRS No.	No. of Pos.	Purchase Unit
RM15WTLP-4P(81)	CL0109-1886-3-81	4	50pcs per tray
RM15WTLP-4S(32)	CL0109-1888-9-32		
RM15WTLP-8P(81)	CL0109-1887-6-81	8	
RM15WTLP-8S(82)	CL0109-1889-1-82		
RM15WTLP-10P(81)	CL0109-0020-0-81	10	
RM15WTLP-10S(81)	CL0109-0999-4-81		
RM15WTLP-12P(81)	CL0109-0997-9-81	12	
RM15WTLP-12S(81)	CL0109-1911-9-81		

[Specification No.]
(81) : Silver Plating
(32)(82) : Gold Plating

Note 1 : Gasket Material : NBR / Body Plating : Nickel
Note 2 : HRS Recommended Tool : 1.27mm Hex Wrench
Note 3 : Recommended Set Screw Tightening Torque : 0.2 to 0.3N·m.

Oct.1.2026 Copyright 2026 HIROSE ELECTRIC CO., LTD. All Rights Reserved.

Downloaded from Arrow.com.

Applicable Strain Reliefs

External Strain Relief + Internal, Self-Tightening



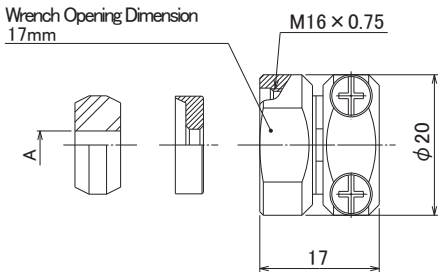

(Representative Example)

JR13WCC-10(72)

Unit : mm

Part No.	HRS No.	A	Purchase Unit
JR13WCC-4(72)	CL0114-2045-0-72	4	20pcs per bag
JR13WCC-5(72)	CL0114-2046-3-72	5	
JR13WCC-6(72)	CL0114-2047-6-72	6	
JR13WCC-7(72)	CL0114-2048-9-72	7	
JR13WCC-8(72)	CL0114-2049-1-72	8	
JR13WCC-9(72)	CL0114-2050-0-72	9	
JR13WCC-10(72)	CL0114-2051-3-72	10	

Internal, Self Tightening

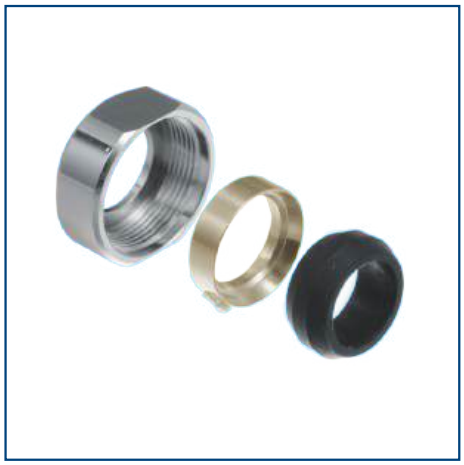

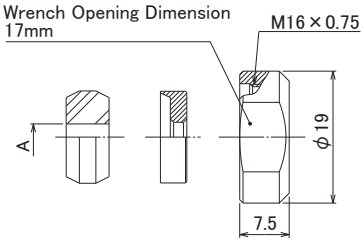

(Representative Example)

JR13WCCA-10(72)

Unit : mm

Part No.	HRS No.	A	Purchase Unit
JR13WCCA-4(72)	CL0114-2069-9-72	4	20pcs per bag
JR13WCCA-5(72)	CL0114-2070-8-72	5	10pcs per bag
JR13WCCA-6(72)	CL0114-2071-0-72	6	
JR13WCCA-7(72)	CL0114-2072-3-72	7	
JR13WCCA-8(72)	CL0114-2073-6-72	8	
JR13WCCA-9(72)	CL0114-2074-9-72	9	
JR13WCCA-10(72)	CL0114-2075-1-72	10	

Note 1 : Please use cable jacket diameter : A ± 0.2mm.
Note 2 : When using the self-tightening strain relief verify the cable pull force requirements.

Oct.1.2026 Copyright 2026 HIROSE ELECTRIC CO., LTD. All Rights Reserved.

Downloaded from Arrow.com.

Receptacles (Jam Nut Type)

Front Panel Mount



RM15WTRZ-10S(81)

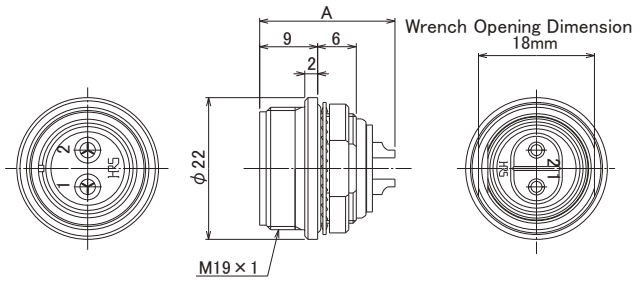

(Representative Example)

Unit : mm

Part No.	HRS No.	No. of Pos.	A	Purchase Unit
RM15WTRZ-2P(8#)	CL0109-1631-2-8#	2	21	20pcs per bag
RM15WTRZ-4P(8#)	CL0109-1633-8-8#	4		
RM15WTRZ-8P(8#)	CL0109-1634-0-8#	8	20.65	
RM15WTRZ-10P(8#)	CL0109-1635-3-8#	10		
RM15WTRZ-12P(8#)	CL0109-1636-6-8#	12		
RM15WTRZ-2S(8#)	CL0109-1637-9-8#	2	21.75	
RM15WTRZ-4S(8#)	CL0109-1639-4-8#	4		
RM15WTRZ-8S(8#)	CL0109-1640-3-8#	8	21.6	
RM15WTRZ-10S(8#)	CL0109-1641-6-8#	10		
RM15WTRZ-12S(8#)	CL0109-1642-9-8#	12		

[Specification No.]
(81) : Silver Plating
(82) : Gold Plating

Note : Recommended Nut Tightening Torque : 3 to 4N･m

Oct.1.2026 Copyright 2026 HIROSE ELECTRIC CO., LTD. All Rights Reserved.

Downloaded from Arrow.com.

Rear Panel Mount



RM15WTRZA-10S(81)

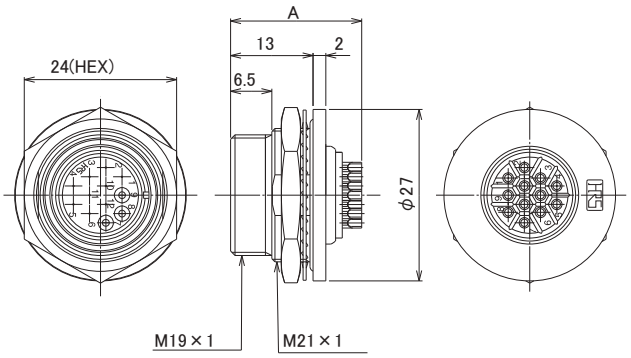

(Representative Example)

Unit : mm

Part No.	HRS No.	No. of Pos.	A	Purchase Unit
RM15WTRZA-2P(8#)	CL0109-1651-0-8#	2	21	20pcs per bag
RM15WTRZA-4P(8#)	CL0109-1653-5-8#	4		
RM15WTRZA-8P(8#)	CL0109-1654-8-8#	8	20.65	
RM15WTRZA-10P(8#)	CL0109-1655-0-8#	10		
RM15WTRZA-12P(8#)	CL0109-1656-3-8#	12		
RM15WTRZA-2S(8#)	CL0109-1657-6-8#	2	21.75	
RM15WTRZA-4S(8#)	CL0109-1659-1-8#	4		
RM15WTRZA-8S(8#)	CL0109-1660-0-8#	8	21.6	
RM15WTRZA-10S(8#)	CL0109-1661-3-8#	10		
RM15WTRZA-12S(8#)	CL0109-1662-6-8#	12		

[Specification No.]
(81) : Silver Plating
(82) : Gold Plating

Note : Recommended Nut Tightening Torque : 3 to 4N·m

Oct.1.2026 Copyright 2026 HIROSE ELECTRIC CO., LTD. All Rights Reserved.

Downloaded from Arrow.com.

Receptacles (Square Flange Type)

Mated Waterproof Type



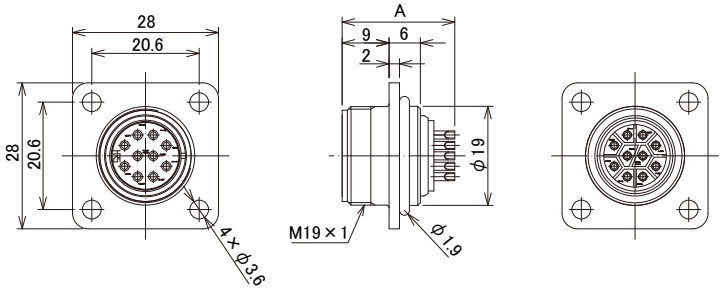

(Representative Example)

RM15WTRZB-10S(81)

Unit : mm

Part No.	HRS No.	No. of Pos.	A	Purchase Unit
RM15WTRZB-2P(8#)	CL0109-1671-7-8#	2	21	20pcs per bag
RM15WTRZB-4P(8#)	CL0109-1673-2-8#	4		
RM15WTRZB-8P(8#)	CL0109-1674-5-8#	8	20.65	
RM15WTRZB-10P(8#)	CL0109-1675-8-8#	10		
RM15WTRZB-12P(8#)	CL0109-1676-0-8#	12		
RM15WTRZB-2S(8#)	CL0109-1677-3-8#	2	21.75	
RM15WTRZB-4S(8#)	CL0109-1679-9-8#	4		
RM15WTRZB-8S(8#)	CL0109-1680-8-8#	8	21.6	
RM15WTRZB-10S(8#)	CL0109-1681-0-8#	10		
RM15WTRZB-12S(8#)	CL0109-1682-3-8#	12		

[Specification No.]
(81) : Silver Plating
(82) : Gold Plating

Note 1 : Screw size : M3
Note 2 : Recommended Nut Tightening Torque : 0.3 to 0.35N·m

Oct.1.2026 Copyright 2026 HIROSE ELECTRIC CO., LTD. All Rights Reserved.

Downloaded from Arrow.com.

Cap

Plug Cap



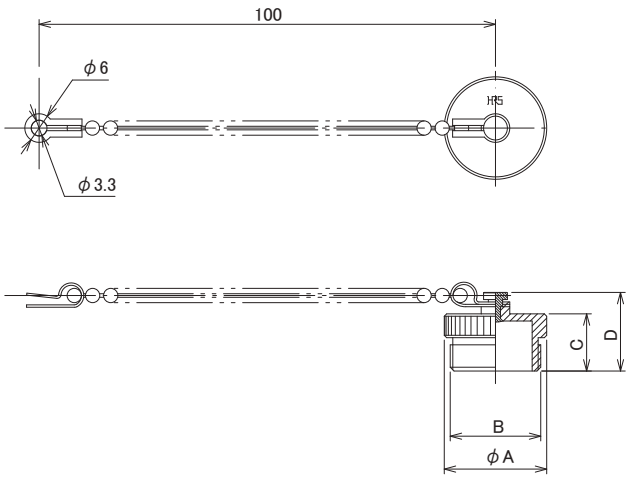

Unit : mm

Part No.	HRS No.	ϕA	B	C	D	Purchase Unit
RM15TP-C(71)	CL0109-0079-6-71	21.5	M19 × 1	12.0	16.5	20pcs per bag

Receptacle Cap



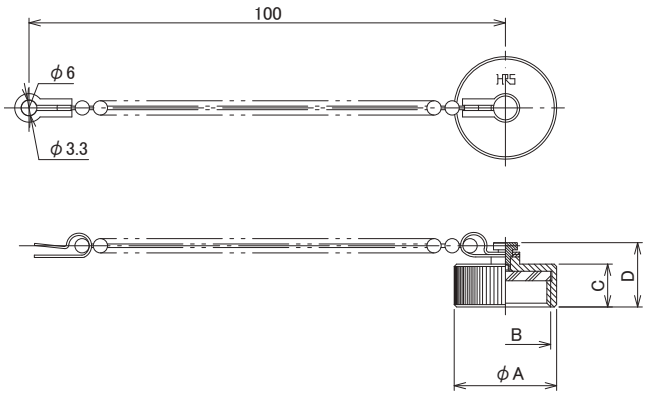

Unit : mm

Part No.	HRS No.	ϕA	B	C	D	Purchase Unit
RM15TR-C(31)	CL0109-0080-5-31	21.5	M19 × 1	9.0	13.5	20pcs per bag

Oct.1.2026 Copyright 2026 HIROSE ELECTRIC CO., LTD. All Rights Reserved.

Downloaded from Arrow.com.

Size RM21WT to RM31WT

Plugs - Straight Short Back Shell (Assembly Type)



RM21WTP-15P(81)

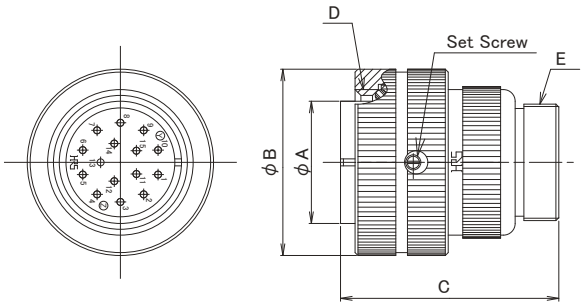

(Representative Example)

Note : Recommended Set Screw Tightening Torque : 0.2 to 0.3 N·m.

Unit : mm

Part No.	HRS No.	No. of Pos.	ϕ A	ϕ B	C	D	E	Purchase Unit
RM21WTP-15S(31)	CL0109-1401-2-31	15	21	32	37.5	TM25 × 2	M20 × 0.75	30pcs per tray
RM21WTP-15P(81)	CL0109-1403-8-81							
RM21WTP-20S(31)	CL0109-1402-5-31	20						
RM21WTP-20P(81)	CL0109-1404-0-81							
RM31WTP-40P(81)	CL0109-1573-8-81	40	30.8	42	52	TM35 × 2	M28 × 0.75	

[Specification No.]
(31)(81) : Silver Plating

Oct.1.2026 Copyright 2026 HIROSE ELECTRIC CO., LTD. All Rights Reserved.

Downloaded from Arrow.com.

Applicable Strain Reliefs

External Strain Relief + Internal, Self-Tightening



JR16WCC-10(72)

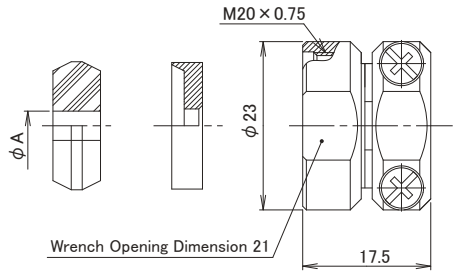

(Representative Example)

Unit : mm

Part No.	HRS No.	ϕ A	Purchase Unit
JR16WCC-6(72)	CL0114-2053-9-72	6	20pcs per bag
JR16WCC-8(72)	CL0114-2054-1-72	8	
JR16WCC-10(72)	CL0114-2055-4-72	10	
JR16WCC-11(72)	CL0114-2154-6-72	11	
JR16WCC-12(72)	CL0114-2056-7-72	12	

Note 1 : Please use cable jacket diameter : A ± 0.2mm.
Note 2 : HRS Recommended Tool : 1.27mm Hex Wrench
Note 3 : Recommended Set Screw Tightening Torque : 0.3 to 0.4N·m.
Note 4 : For RM21WT (No Set Screw)

Oct.1.2026 Copyright 2026 HIROSE ELECTRIC CO., LTD. All Rights Reserved.

Downloaded from Arrow.com.

Internal, Self Tightening



RM21WTP-CP(8)(71)

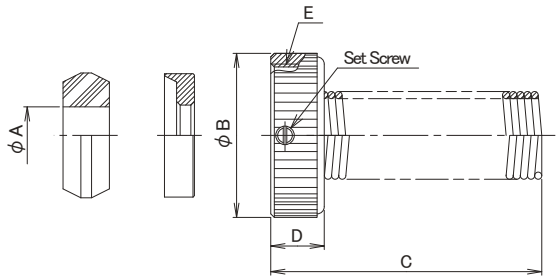

(Representative Example)

Note : Recommended Set Screw Tightening Torque : 0.2 to 0.3 N·m.

Unit : mm

Part No.	HRS No.	φA	φB	C	D	E	Purchase Unit
RM21WTP-CP(8)(71)	CL0109-1405-3-71	8	23	38	7.5	M20 × 0.75	20pcs per bag
RM21WTP-CP(10)(71)	CL0109-1406-6-71	10					
RM21WTP-CP(12)(71)	CL0109-1407-9-71	12					
RM31WTP-CP(10)(71)	CL0109-1575-3-71	10	31	42	12	M28 × 0.75	10pcs per bag
RM31WTP-CP(12)(71)	CL0109-1576-6-71	12					
RM31WTP-CP(14)(71)	CL0109-1579-4-71	14					
RM31WTP-CP(16)(71)	CL0109-1577-9-71	16					
RM31WTP-CP(18)(71)	CL0109-1578-1-71	18					

Note 1 : Please use cable jacket diameter : A ± 0.2mm.
Note 2 : Please select the applicable strain relief from shell size number on the connector and strain relief with the same number.
Note 3 : When using the self-tightening strain relief verify the cable pull force requirements.
Note 4 : RM21WTP is For RM21WT
RM31WTP is For RM31WT

Oct.1.2026 Copyright 2026 HIROSE ELECTRIC CO., LTD. All Rights Reserved.

Downloaded from Arrow.com.

Receptacles (Jam Nut Type)

Front Panel Mount



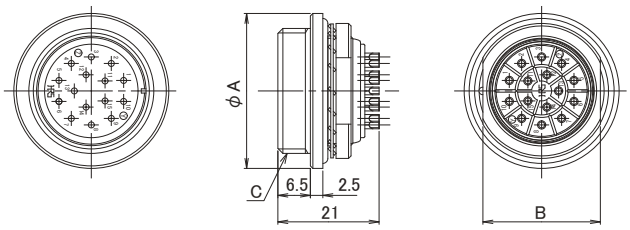

RM21WTR-15P(81)

Unit : mm

Part No.	HRS No.	No. of Pos.	ϕ A	B	C	Purchase Unit
RM21WTR-15P(81)	CL0109-1445-8-81	15	31	23.5	TM25 × 2	5pcs per bag
RM21WTR-20P(81)	CL0109-1446-0-81	20				
RM31WTR-40S(81)	CL0109-1527-0-81	40	41	34	TM35 × 2	1pc per bag
RM21WTR-15S(31)	CL0109-1447-3-31	15	31	23.5	TM25 × 2	5pcs per bag
RM21WTR-20S(31)	CL0109-1448-6-31	20				

Note : Recommended Nut Tightening Torque : 3N·m

[Specification No.]
(31)(81) : Silver Plating

Oct.1.2026 Copyright 2026 HIROSE ELECTRIC CO., LTD. All Rights Reserved.

Downloaded from Arrow.com.

Cap

Plug Cap



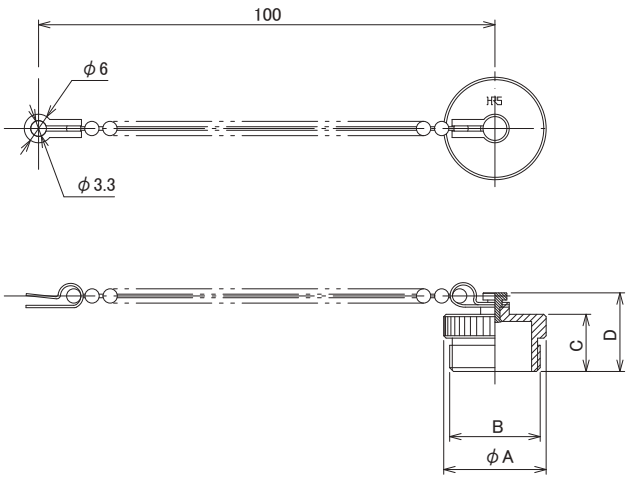

Unit : mm

Part No.	HRS No.	ϕA	B	C	D	Purchase Unit
RM21TP-C(71)	CL0109-0353-6-71	28	TM25×2	17.5	22	20pcs per bag

Receptacle Cap



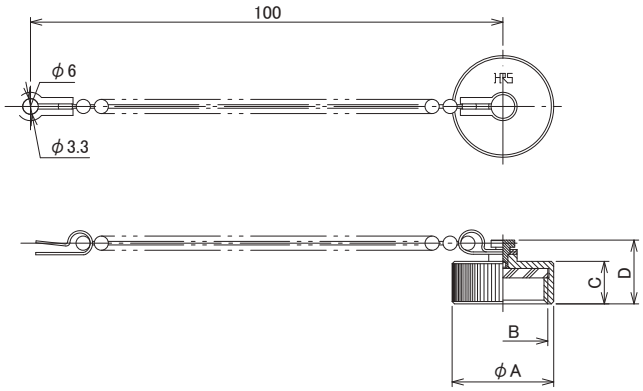

Unit : mm

Part No.	HRS No.	ϕA	B	C	D	Purchase Unit
RM21TR-C(31)	CL0109-0354-9-31	28	TM25×2	8	12.5	20pcs per bag

Oct.1.2026 Copyright 2026 HIROSE ELECTRIC CO., LTD. All Rights Reserved.

Downloaded from Arrow.com.

Recommended Panel Cut-Out Dimensions

Size RM15WT

Receptacle

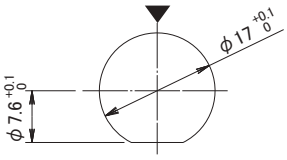

Panel Thickness : 0.5 to 2mm

RM15WTRZ

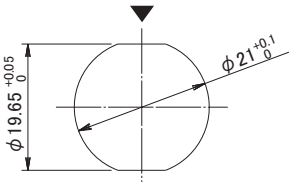

Panel Thickness : 0.5 to 2.5mm

RM15WTRZA

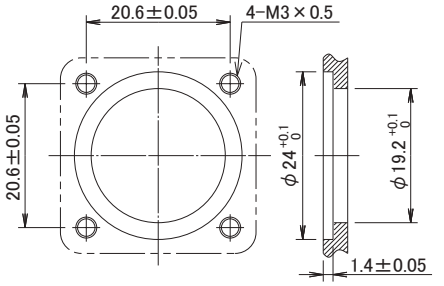

Panel Thickness : 2.5 to 4mm

RM15WTRZB

Note 1 : When attaching the receptacle to the panel, be certain to check that the gasket is in place in the groove. Do not pinch the gasket.
Note 2 : The view of the above diagrams is from the receptacle mating side.
Note 3 : The ▼ symbol in the above diagrams indicates the coupling guide position of the receptacles.

Size RM21WT to RM31WT

Receptacle
(Front Mounting and Jam Nut)

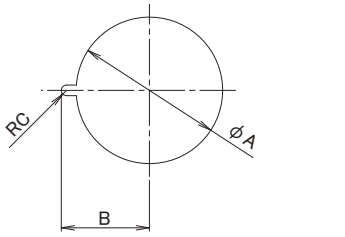

Panel Thickness : 0.5–2mm
Tolerance : +0.1/0

RM##WTR

Unit : mm

Part No.	ϕ A	B	RC
RM21WTR	22.1	12.75	0.8
RM31WTR	32.1	17.75	0.85

Note 1 : When attaching the receptacle to the panel, be certain to check that the gasket is in place in the groove. Do not pinch the gasket.
Note 2 : The view of the above diagrams is from the receptacle mating side.
Note 3 : The ▼ symbol in the above diagrams indicates the coupling guide position of the receptacles.

Oct.1.2026 Copyright 2026 HIROSE ELECTRIC CO., LTD. All Rights Reserved.

Downloaded from Arrow.com.

Contact Arrangement and Specifications

Size RM15WT

	Shell Size : 15				
Contact Arrangement	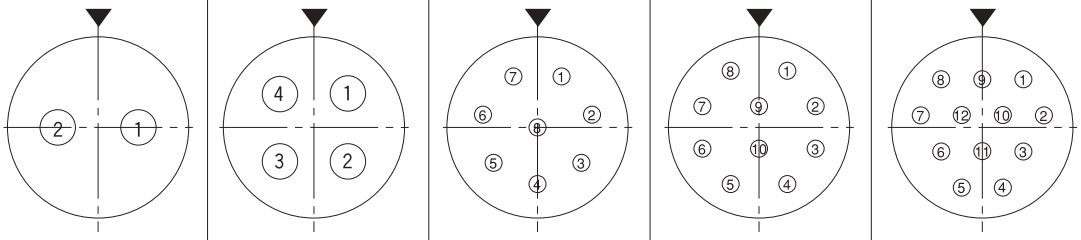				
No. of Pos.	2	4	8	10	12
Withstanding Voltage	1,800V AC / 1 minute	1,500V AC / 1 minute		1,000V AC / 1 minute	
Current Rating	10A		5A		
Insulation Resistance	1,000MΩ Min.				
Contact Resistance	2mΩ Max.		4mΩ Max.		
Solder Pot Inner Diameter	φ1.7mm		φ1.1mm (Male Contact) / φ1.15mm (Female Contact)		

Note 1 : The figure above shows the connector with the female contact as seen from the mating side.
Note 2 : The ▼ symbol in the above diagrams indicates the coupling guide position of the receptacles.
Note 3 : Withstanding voltages indicate test voltage values.

Size RM21WT to RM31WT

	Shell Size : 21		Shell Size : 31
Contact Arrangement	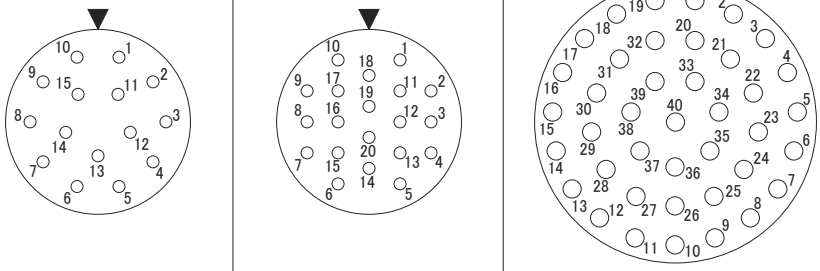		
No. of Pos.	15	20	40
Withstanding Voltage	1,500V AC / 1 minute	1,000V AC / 1 minute	1,800V AC / 1 minute
Current Rating	5A		
Insulation Resistance	1000MΩ Min.		
Contact Resistance	4mΩ Max.		
Solder Pot Inner Diameter	φ1.1mm (Male Contact) / φ1.15mm (Female Contact)		

Note 1 : The figure above shows the connector with the female contact as seen from the mating side.
Note 2 : The ▼ symbol in the above diagrams indicates the coupling guide position of the receptacles.
Note 3 : Withstanding voltages indicate test voltage values.

Applicable Tools

Item	Type	Part No.	HRS No.	Compatible Connector
Disassembly and Assembly of Connectors	Assembly Tools	RM15TP-T01	CL0150-0098-0-00	RM15WTPZA-## RM15WTPZ-## RM15WTLP-##

Oct.1.2026 Copyright 2026 HIROSE ELECTRIC CO., LTD. All Rights Reserved.

Downloaded from Arrow.com.

Cable Assembly

■ Items Required Prior to Starting

The work-related documents listed below are required before starting harness assembly.
When the documents shown below are not available, ask a Hirose sales personnel to provide them.

Document Name	Document No.	Contents	Compatible Connector	Remarks
RM15WTPZ Connector Cable Assembly Procedures	ETAD-C0525-00	Cable Assembly Procedure	RM15WTPZA-## RM15WTPZ-##	Please contact a Hirose sales representative.
RM15WTLP Connector Cable Assembly Procedures	ATAD-C0093-00	Cable Assembly Procedure	RM15WTLP-##	Please contact a Hirose sales representative.

Precautions

1. Always switch off the circuit power before disconnecting or connecting the connectors.
2. Use connectors with female contacts on the power side of the circuit.
3. Ensure the coupling is fully locked.
4. Match the correct plug/receptacle for effective dust and water protection.
5. This series features silver-plated contacts. Silver may tarnish when exposed to sulfur gases under certain conditions such as:

* Dusty environments
* High sulfur gas concentration areas, e.g., near factory exhausts, automotive emissions
* Extreme temperature variations, high humidity, proximity to heaters
* Near rubber products, including adhesives.

Tarnishing does not affect electrical connections due to the contact pins' wiping effect.

Storage Instructions:

* Store in original or equivalent packaging.
* Temperature range: -10 to +60℃, with a maximum humidity of 85%.
* Store in a stable temperature and humidity environment.

Use products within 6 months of delivery. After 6 months, verify solderability before use.
'Storage' refers to keeping unused products in sealed packaging before PCB assembly.

While Taking into Consideration

Specifications mentioned in this catalog are reference values.
When considering to order or use this product, please review the Drawing and Product Specifications sheets.
Use an appropriate cable when using the connector in combination with cables.
If considering usage of a non-specified cable, please contact your sales representative.
If assembly process is done by jigs & tools which are not identified by Hirose, the warranty of the product may be affected.
If considering usage for below mentioned applications, please contact your sales representative.
In cases where the application will demand a high level of reliability, such as automotive, medical instruments, public infrastructure, aerospace/defense etc. Hirose must review before assurance of reliability can be given.

Oct.1.2026 Copyright 2026 HIROSE ELECTRIC CO., LTD. All Rights Reserved.

HIROSE ELECTRIC CO.,LTD. 2-6-3,Nakagawa Chuoh,Tsuzuki-Ku,Yokohama-Shi 224-8540,JAPAN
https://www.hirose.com

※The contents of this catalog are current as of date of 3/2024. Contents are subject to change without notice for the purpose of improvements.
※The HRS logo and "HIROSE" are trademarks of HIROSE ELECTRIC CO., LTD.

Downloaded from Arrow.com.