XLamp® CMB1825 LED

PRODUCT DESCRIPTION

The XLamp® CMB family delivers industry-leading lumen density and efficacy in Cree LED's package and LES sizes. Leveraging the latest COB technology platform, the CMB family provides a no-compromise performance upgrade to existing CXA, CXB and CMA product families while retaining mechanical and optical compatibility with them.

XLamp CMB LEDs are optimized for premium indoor lighting applications, including track, spot and downlight, as well as outdoor lighting.

FEATURES

- 12-mm optical source
- Mechanical and optical design consistent with CXA18, CXB18 and CMA18 LEDs with a 12-mm optical source
- Available in 70, 80, 90, and 95 CRI minimum options
- EasyWhite® 2-, 3- and 5-step binning, 6500 K to 2200 K
- Premium Color 2- and 3-step binning
- Forward voltage option: 36-V class
- 85 °C binning and characterization
- Maximum drive current: 1800 mA
- 115° viewing angle, uniform chromaticity profile
- Top-side solder connections
- RoHS and REACH compliant
- UL® recognized component (E349212)

TABLE OF CONTENTS

Characteristics 2
Operating Limits 2
Flux Characteristics, Order Codes & Bins - Standard LEDs 3
Flux Characteristics, Order Codes & Bins - Standard LEDs, Premium Color 4
Relative Spectral Power Distribution, Standard LEDs 5
Relative Spectral Power Distribution, Premium Color LEDs 6
Electrical Characteristics 8
Relative Luminous Flux 9
Relative Chromaticity vs. Current and Temperature 10
Typical Spatial Distribution 14
Performance Groups - Chromaticity 15
Premium Color Performance Groups - Chromaticity 17
EasyWhite® Bins Plotted on the 1931 CIE Color Space 18
Bin and Order Code Formats 20
Mechanical Dimensions 21
Thermal Design 22
Notes 23
Packaging 24

Cree LED / 4001 E. Hwy. 54, Suite 2000 / Durham, NC 27713 USA / +1.919.313.5330 / www.cree-led.com

© 2022-2025 Cree LED. The information in this document is subject to change without notice. Cree®, XLamp®, EasyWhite®, the Cree logo, and the Cree LED logo are registered trademarks of Cree LED. UL® and the UL logo are registered trademarks of UL LLC.

Downloaded from Arrow.com.

CHARACTERISTICS

Characteristics	Unit	Minimum	Typical	Maximum
Viewing angle (FWHM)	degrees		115	
ESD withstand voltage (JEDEC JS-001-2012)	V		Class 3A	
DC forward current	mA			1800*
Reverse current	mA			0.1
Forward voltage (@ 700 mA, 85 °C)	V		34	38

* Refer to the Operating Limits section.

OPERATING LIMITS

The maximum current rating of the CMB1825 LED depends on the case temperature (Tc) when the LED has reached thermal equilibrium under steady-state operation. The graph shown below assumes that the system design employs good thermal management (thermal interface material and heat sink) and may vary when poor thermal management is employed. Either solder pad shown in the Mechanical Dimensions section on page 21 can be used as the Tc measurement point.

Another important factor in good thermal management is the temperature of the Light Emitting Surface (LES). Cree LED recommends a maximum LES temperature of 140 °C to ensure optimal LED lifetime. Please refer to the Thermal Design section on page 22 for more information on LES temperature measurement.

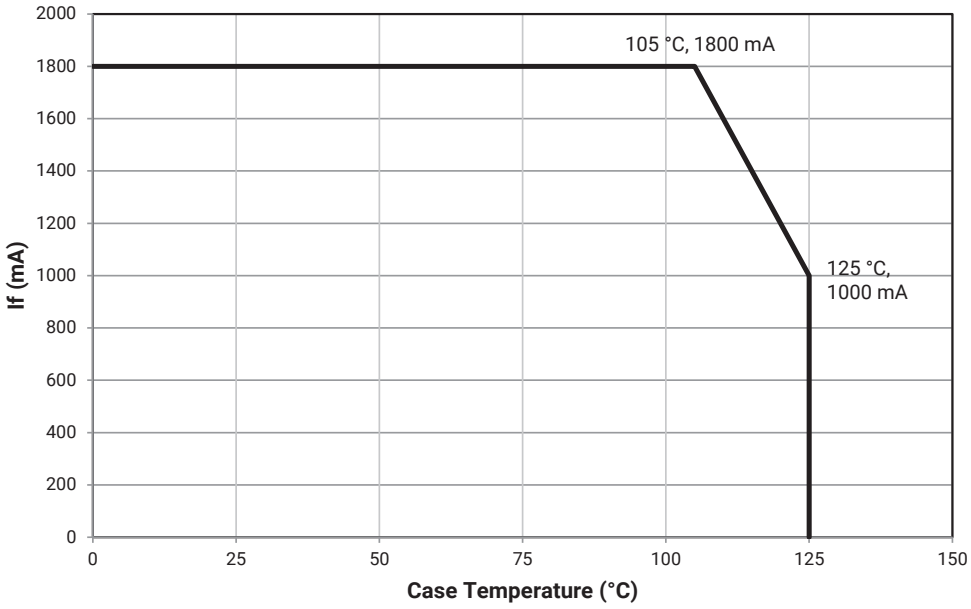

© 2022-2025 Cree LED. The information in this document is subject to change without notice. Cree®, XLamp®, EasyWhite®, the Cree logo, and the Cree LED logo are registered trademarks of Cree LED. UL® and the UL logo are registered trademarks of UL LLC.

Downloaded from Arrow.com.

FLUX CHARACTERISTICS, ORDER CODES & BINS - STANDARD LEDS (I_F = 700 mA, T_J = 85 °C)

The following tables provide order codes for XLamp CMB1825 LEDs. For a complete description of the order code nomenclature, please see the Bin and Order Code Formats section (page 20).

Nominal CCT	CRI		Minimum Luminous Flux (lm)	Typical Luminous Flux (lm)	2-Step		3-Step		5-Step	
	Min.	Typ			Group	Order Code	Group	Order Code	Group	Order Code
6500 K	70	73	3942	4228					65E	CMB1825-0000-000N0B0A65E
	80	82	3611	3874			65G	CMB1825-0000-000N0H0A65G		
5700 K	70	73	3919	4204					57E	CMB1825-0000-000N0B0A57E
	80	82	3590	3851			57G	CMB1825-0000-000N0H0A57G		
	90	92	3117	3344			57G	CMB1825-0000-000N0U0A57G		
5000 K	70	73	3912	4196					50E	CMB1825-0000-000N0B0A50E
	80	82	3584	3844			50G	CMB1825-0000-000N0H0A50G		
	90	92	3076	3299			50G	CMB1825-0000-000N0U0A50G		
4000 K	70	73	3866	4147					40E	CMB1825-0000-000N0B0A40E
	80	82	3543	3800	40H	CMB1825-0000-000N0H0A40H	40G	CMB1825-0000-000N0H0A40G		
	90	92	3046	3267	40H	CMB1825-0000-000N0U0A40H	40G	CMB1825-0000-000N0U0A40G		
3500 K	80	82	3512	3767	35H	CMB1825-0000-000N0H0A35H	35G	CMB1825-0000-000N0H0A35G		
	90	92	3045	3266	35H	CMB1825-0000-000N0U0A35H	35G	CMB1825-0000-000N0U0A35G		
3000 K	70	73	3769	4043					30E	CMB1825-0000-000N0B0A30E
	80	82	3453	3703	30H	CMB1825-0000-000N0H0A30H	30G	CMB1825-0000-000N0H0A30G		
	90	92	3004	3222	30H	CMB1825-0000-000N0U0A30H	30G	CMB1825-0000-000N0U0A30G		
2700 K	80	82	3315	3556	27H	CMB1825-0000-000N0H0A27H	27G	CMB1825-0000-000N0H0A27G		
	90	92	2886	3096	27H	CMB1825-0000-000N0U0A27H	27G	CMB1825-0000-000N0U0A27G		
2400 K	80	82	3112	3338	24H	CMB1825-0000-000N0H0A24H	24G	CMB1825-0000-000N0H0A24G		
	90	92	2688	2883	24H	CMB1825-0000-000N0U0A24H	24G	CMB1825-0000-000N0U0A24G		
2200 K	80	82	2919	3131	22H	CMB1825-0000-000N0H0A22H	22G	CMB1825-0000-000N0H0A22G		
	90	92	2481	2662	22H	CMB1825-0000-000N0U0A22H	22G	CMB1825-0000-000N0U0A22G		

Notes

- Cree LED maintains a tolerance of ±7% on flux and power measurements, ±0.005 on chromaticity (CCx, CCy) measurements and a tolerance of ±2 on CRI measurements. See the Measurements section (page 23).
- For 80 CRI minimum LEDs, CRI R9 minimum is 0 with a ±2 tolerance. For 90 CRI minimum LEDs, CRI R9 typical is 60.

© 2022-2025 Cree LED. The information in this document is subject to change without notice. Cree®, XLamp®, EasyWhite®, the Cree logo, and the Cree LED logo are registered trademarks of Cree LED. UL® and the UL logo are registered trademarks of UL LLC.

Downloaded from Arrow.com.

FLUX CHARACTERISTICS, ORDER CODES & BINS - STANDARD LEDS, PREMIUM COLOR (I_F = 700 mA, T_J = 85 °C)

Fidelity

Nominal CCT	CRI*		Minimum Luminous Flux (lm)	Typical Luminous Flux (lm)	2-Step	
	Min.	Typ			Group	Order Code
4000 K	95	98	2751	2951	40H	CMB1825-0000-000N0Z0A40H
3500 K	95	98	2737	2936	35H	CMB1825-0000-000N0Z0A35H
3000 K	95	98	2658	2851	30H	CMB1825-0000-000N0Z0A30H
2700 K	95	98	2532	2716	27H	CMB1825-0000-000N0Z0A27H
2400 K	95	98	2317	2486	24H	CMB1825-0000-000N0Z0A24H

Specialty

Nominal CCT	CRI		Minimum Luminous Flux (lm)	Typical Luminous Flux (lm)	2-Step		3-Step			
	Min.	Typ			Group	Order Code	Group	Order Code	Group	Order Code
3100 K	90	92	2868	3077			31Q	CMB1825-0000-000N0U0A31Q		
3000 K	90	92	2823	3028					30U	CMB1825-0000-000N0U0A30U
	90	92	2943	3157			30Q	CMB1825-0000-000N0U0A30Q		
	95	98	2505	2687	L7C	CMB1825-0000-000N0Z0AL7C				

Notes

- Cree LED maintains a tolerance of ±7% on flux and power measurements, ±0.005 on chromaticity (CCx, CCy) measurements and a tolerance of ±2 on CRI measurements. See the Measurements section (page 23).
- For 80 CRI minimum LEDs, CRI R9 minimum is 0 with a ±2 tolerance. For 90 CRI minimum LEDs, CRI R9 typical is 60.

© 2022-2025 Cree LED. The information in this document is subject to change without notice. Cree®, XLamp®, EasyWhite®, the Cree logo, and the Cree LED logo are registered trademarks of Cree LED. UL® and the UL logo are registered trademarks of UL LLC.

Downloaded from Arrow.com.

RELATIVE SPECTRAL POWER DISTRIBUTION, STANDARD LEDS

The following graphs are the result of a series of pulsed measurements at 700 mA and T_J = 85 °C.

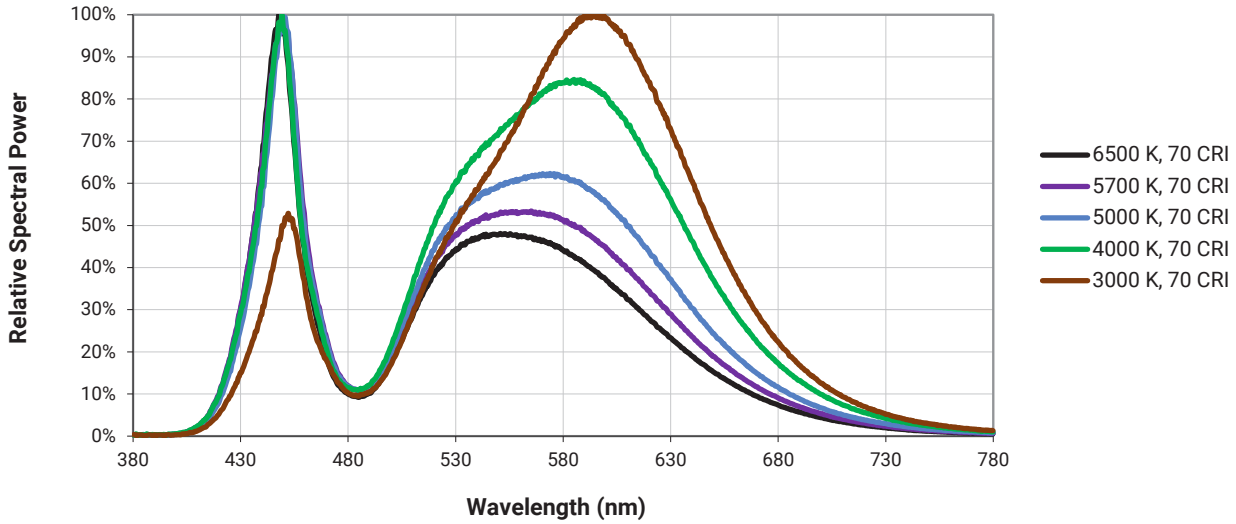

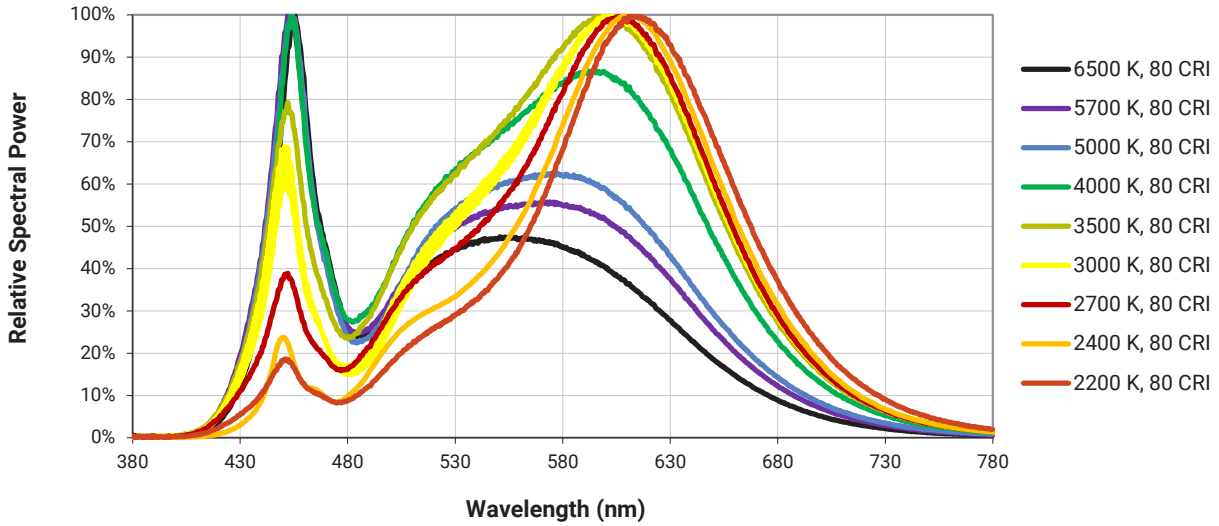

© 2022-2025 Cree LED. The information in this document is subject to change without notice. Cree®, XLamp®, EasyWhite®, the Cree logo, and the Cree LED logo are registered trademarks of Cree LED. UL® and the UL logo are registered trademarks of UL LLC.

Downloaded from Arrow.com.

RELATIVE SPECTRAL POWER DISTRIBUTION, STANDARD LEDS - CONTINUED

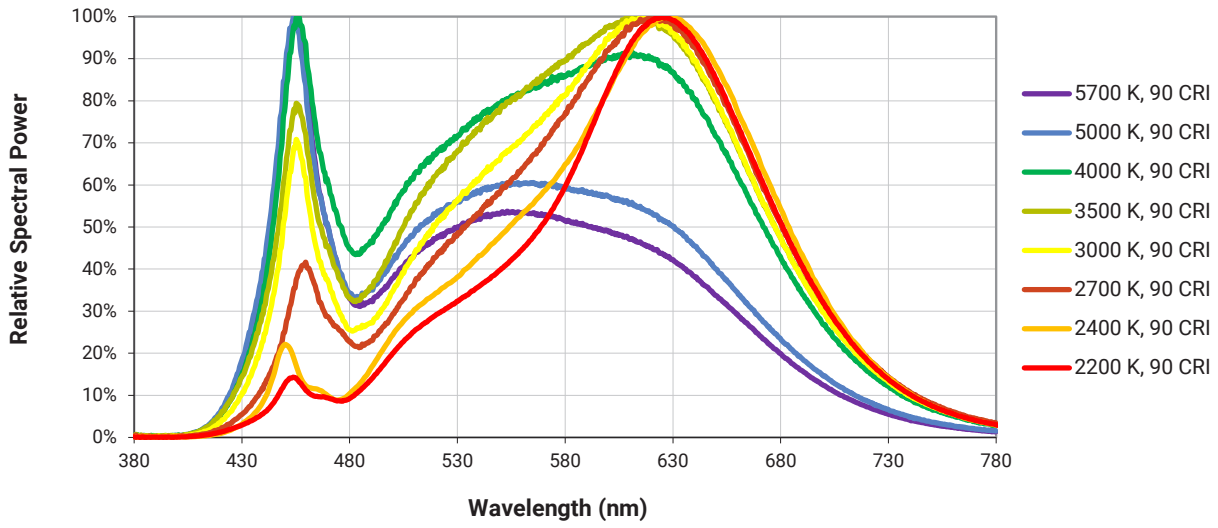

RELATIVE SPECTRAL POWER DISTRIBUTION, PREMIUM COLOR LEDS

The following graphs are the result of a series of pulsed measurements at 700 mA and T_J = 85 °C.

Fidelity

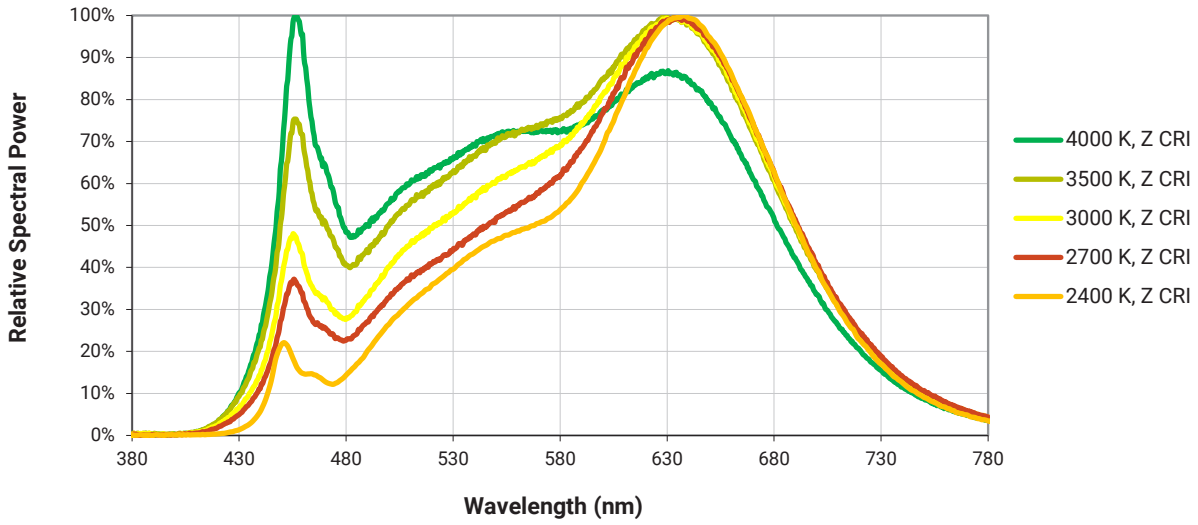

© 2022-2025 Cree LED. The information in this document is subject to change without notice. Cree®, XLamp®, EasyWhite®, the Cree logo, and the Cree LED logo are registered trademarks of Cree LED. UL® and the UL logo are registered trademarks of UL LLC.

Downloaded from Arrow.com.

RELATIVE SPECTRAL POWER DISTRIBUTION, PREMIUM COLOR LEDS - CONTINUED

Specialty

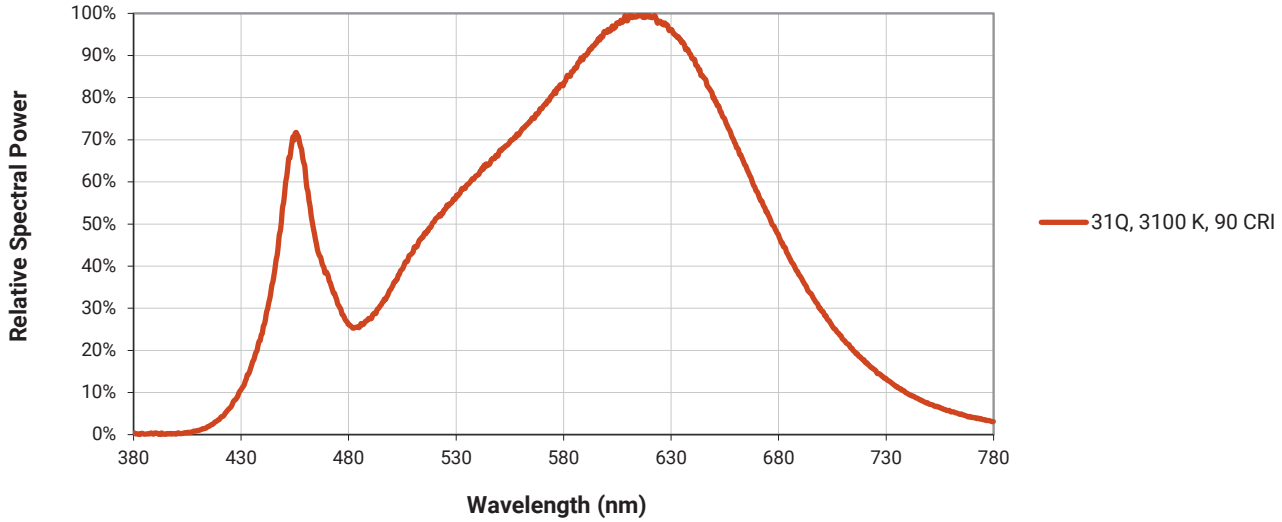

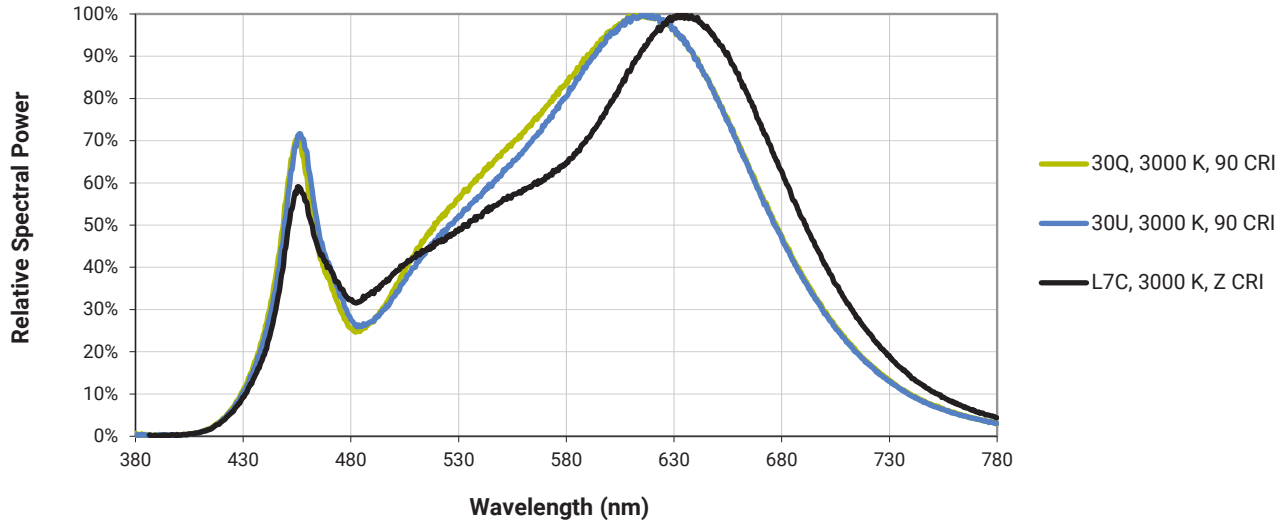

© 2022-2025 Cree LED. The information in this document is subject to change without notice. Cree®, XLamp®, EasyWhite®, the Cree logo, and the Cree LED logo are registered trademarks of Cree LED. UL® and the UL logo are registered trademarks of UL LLC.

Downloaded from Arrow.com.

ELECTRICAL CHARACTERISTICS

The following graph is the result of a series of steady-state measurements.

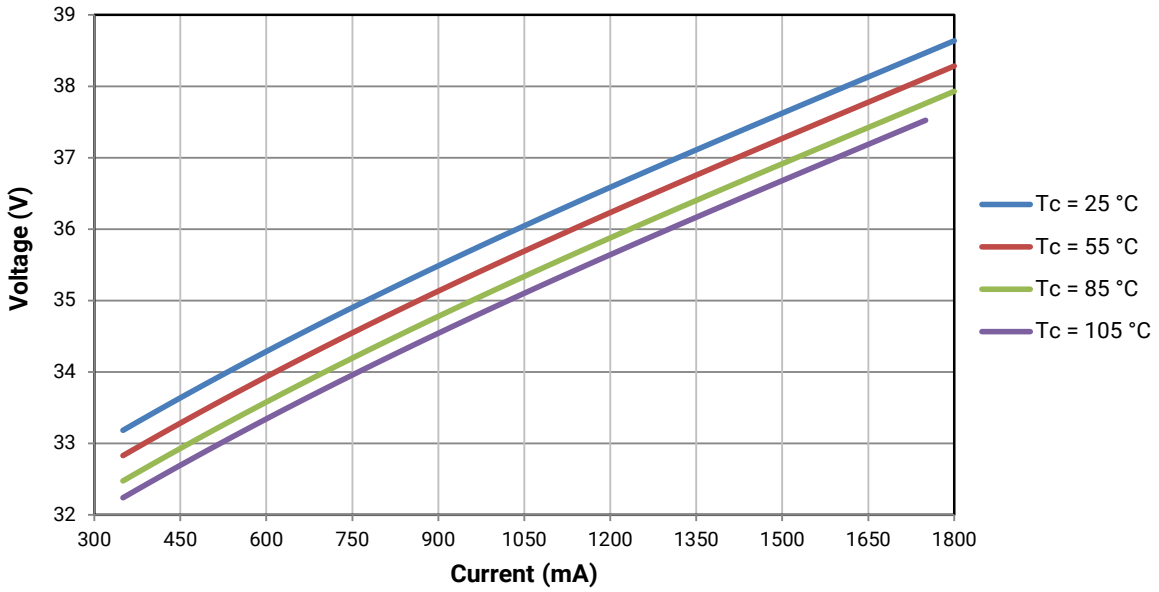

© 2022-2025 Cree LED. The information in this document is subject to change without notice. Cree®, XLamp®, EasyWhite®, the Cree logo, and the Cree LED logo are registered trademarks of Cree LED. UL® and the UL logo are registered trademarks of UL LLC.

Downloaded from Arrow.com.

RELATIVE LUMINOUS FLUX

The relative luminous flux values provided below are the ratio of measurements of the CMB1825 LED at steady-state operation at the given conditions, divided by the flux measured during binning, which is a pulsed measurement at 700 mA at T_J = 85 °C.

For example, at steady-state operation of Tc = 25 °C, I_F = 450 mA, the relative luminous flux ratio is 75% in the chart below. A CMB1825 LED that measures 4120 lm during binning will deliver 3090 lm (4120 * 0.75) at steady-state operation of Tc = 25 °C, I_F = 450 mA.

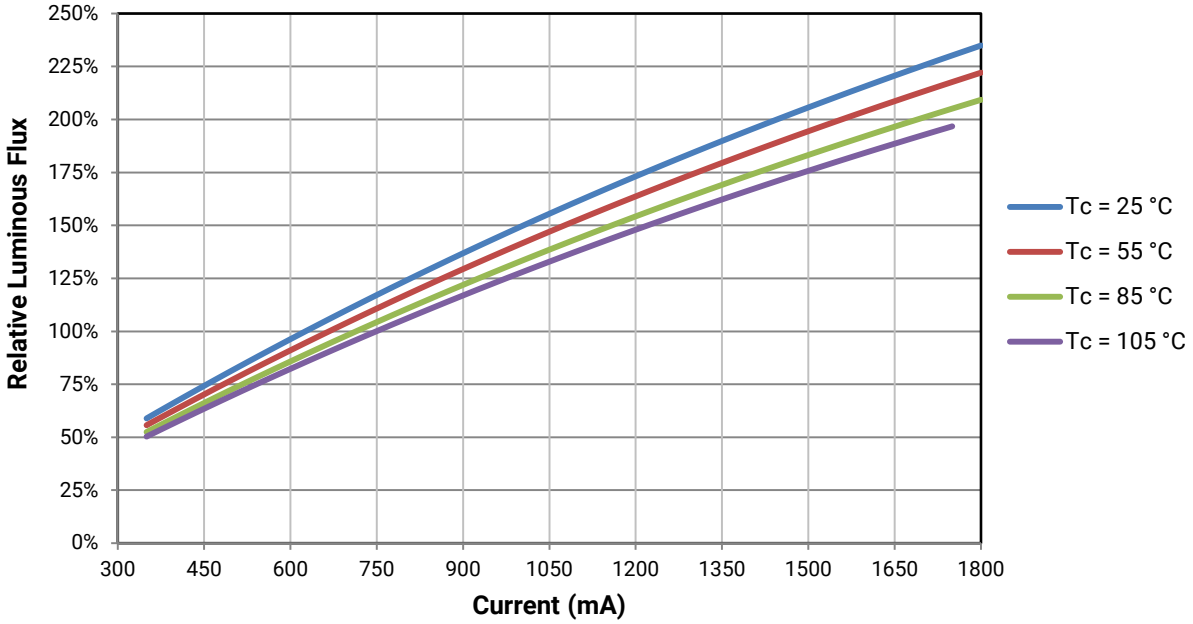

© 2022-2025 Cree LED. The information in this document is subject to change without notice. Cree®, XLamp®, EasyWhite®, the Cree logo, and the Cree LED logo are registered trademarks of Cree LED. UL® and the UL logo are registered trademarks of UL LLC.

Downloaded from Arrow.com.

RELATIVE CHROMATICITY VS. CURRENT AND TEMPERATURE

The following graphs are the result of a series of steady-state measurements. Chromaticity is shown relative to the chromaticity measured at binning, which is a pulsed measurement at T_J = 85 °C.

4000 K, 80 CRI

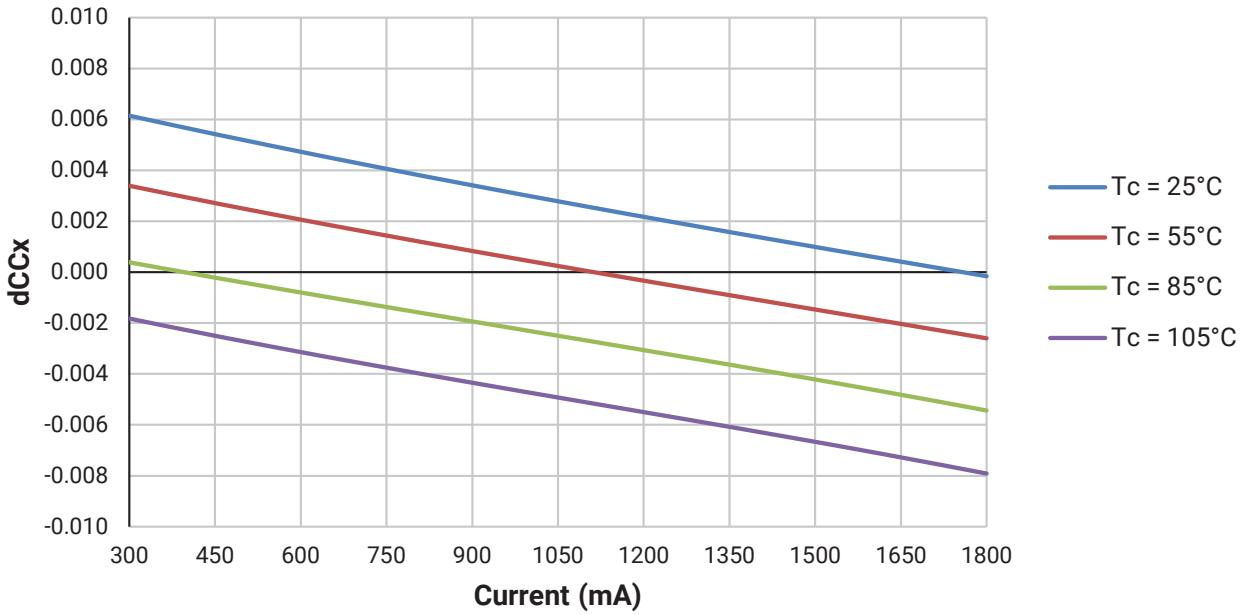

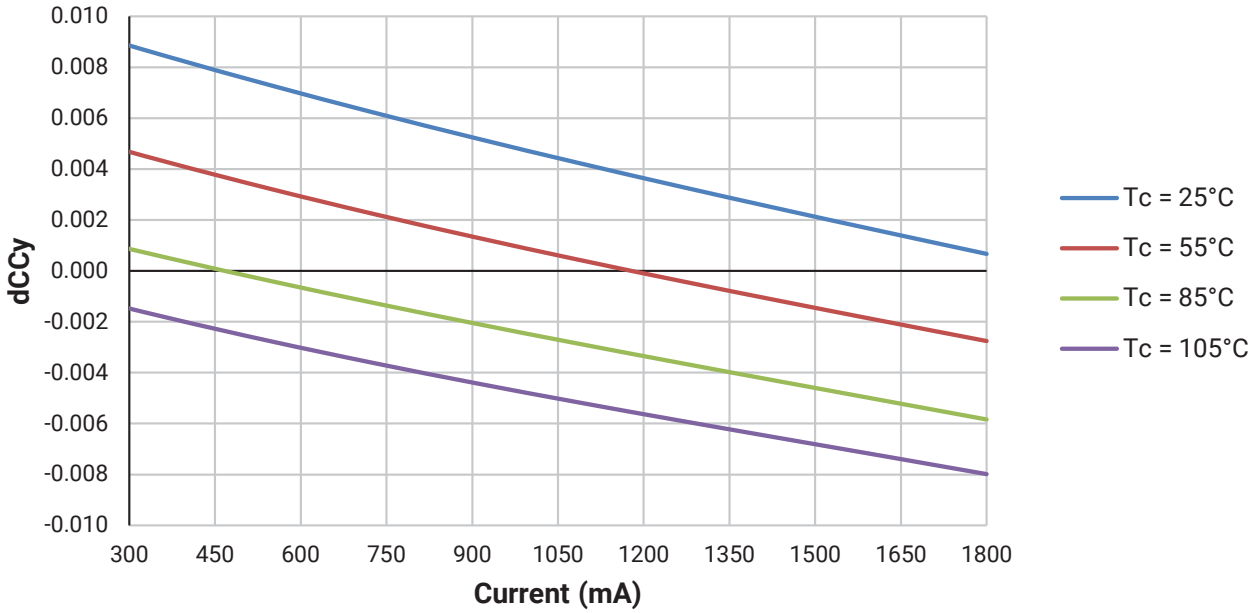

- Relative Chromaticity versus Current and Temperature are shown for reference only. These graphs are not a specification.

© 2022-2025 Cree LED. The information in this document is subject to change without notice. Cree®, XLamp®, EasyWhite®, the Cree logo, and the Cree LED logo are registered trademarks of Cree LED. UL® and the UL logo are registered trademarks of UL LLC.

Downloaded from Arrow.com.

RELATIVE CHROMATICITY VS. CURRENT AND TEMPERATURE - CONTINUED

4000 K, 90 CRI

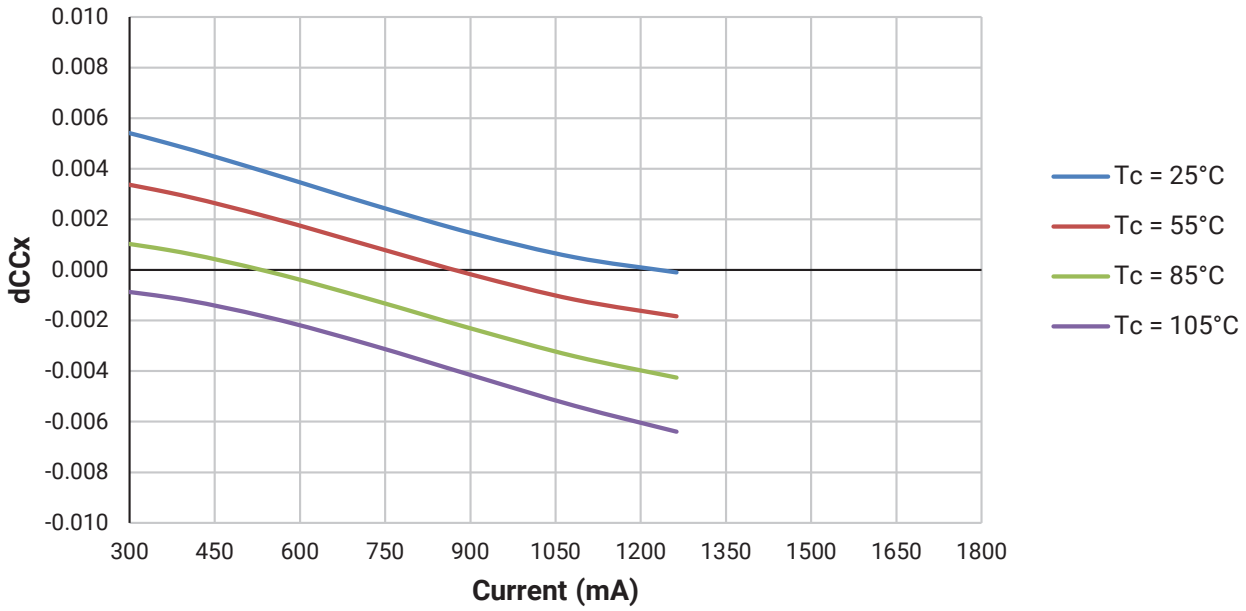

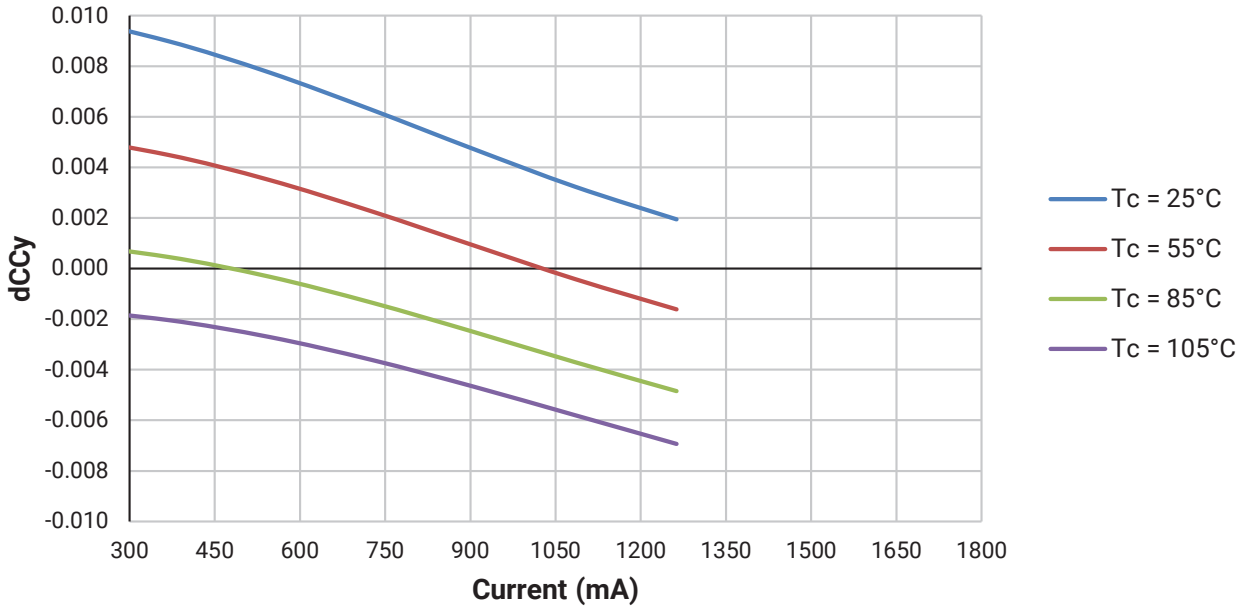

- Relative Chromaticity versus Current and Temperature are shown for reference only. These graphs are not a specification.

© 2022-2025 Cree LED. The information in this document is subject to change without notice. Cree®, XLamp®, EasyWhite®, the Cree logo, and the Cree LED logo are registered trademarks of Cree LED. UL® and the UL logo are registered trademarks of UL LLC.

Downloaded from Arrow.com.

RELATIVE CHROMATICITY VS. CURRENT AND TEMPERATURE - CONTINUED

3000 K, 80 CRI

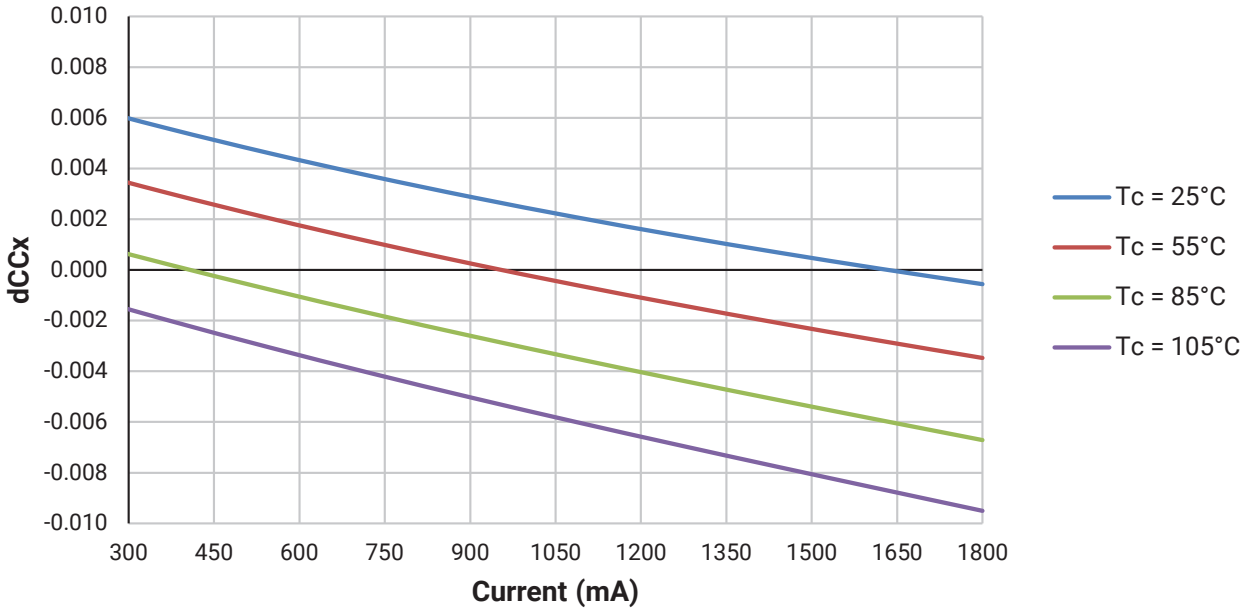

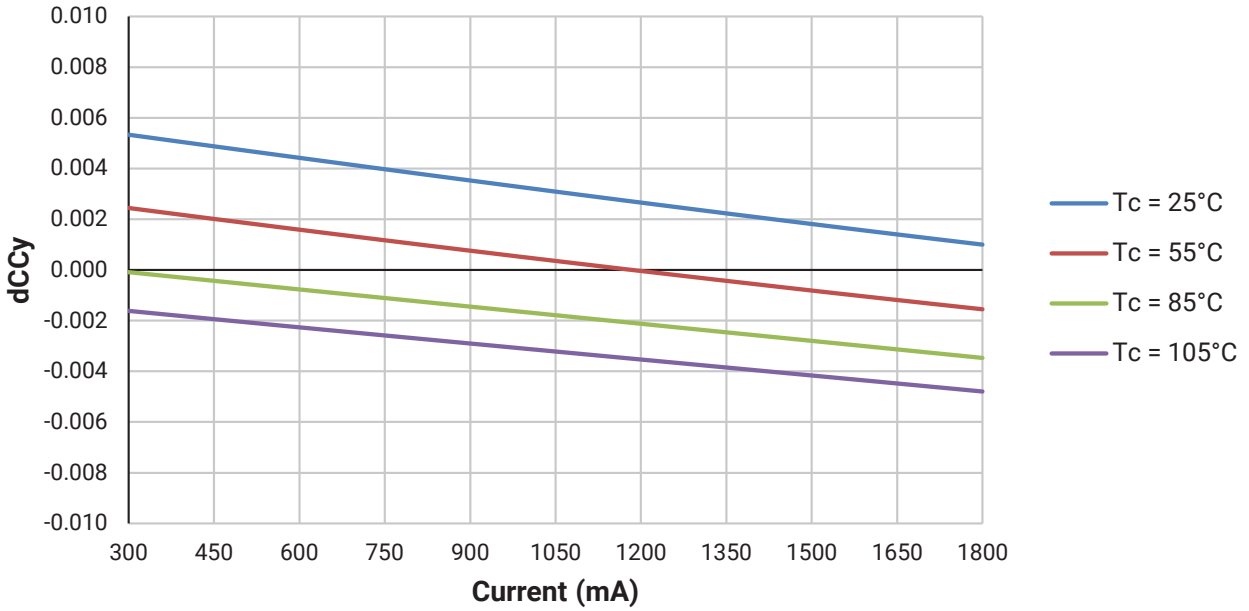

- Relative Chromaticity versus Current and Temperature are shown for reference only. These graphs are not a specification.

© 2022-2025 Cree LED. The information in this document is subject to change without notice. Cree®, XLamp®, EasyWhite®, the Cree logo, and the Cree LED logo are registered trademarks of Cree LED. UL® and the UL logo are registered trademarks of UL LLC.

Downloaded from Arrow.com.

RELATIVE CHROMATICITY VS. CURRENT AND TEMPERATURE - CONTINUED

3000 K, 90 CRI

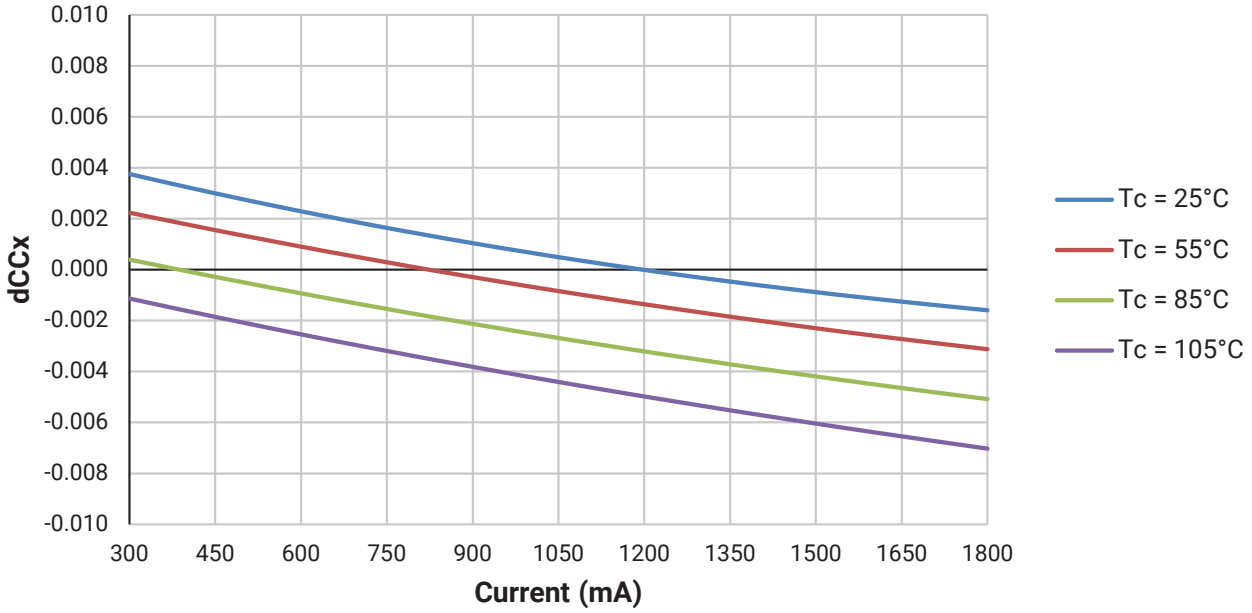

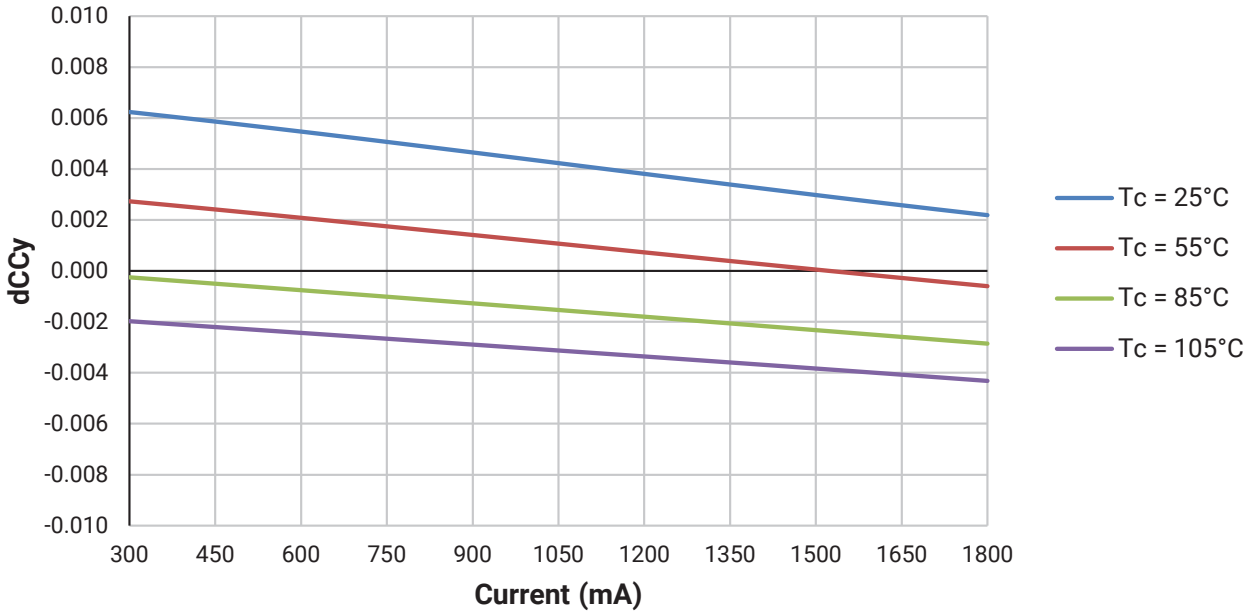

- Relative Chromaticity versus Current and Temperature are shown for reference only. These graphs are not a specification.

© 2022-2025 Cree LED. The information in this document is subject to change without notice. Cree®, XLamp®, EasyWhite®, the Cree logo, and the Cree LED logo are registered trademarks of Cree LED. UL® and the UL logo are registered trademarks of UL LLC.

Downloaded from Arrow.com.

TYPICAL SPATIAL DISTRIBUTION

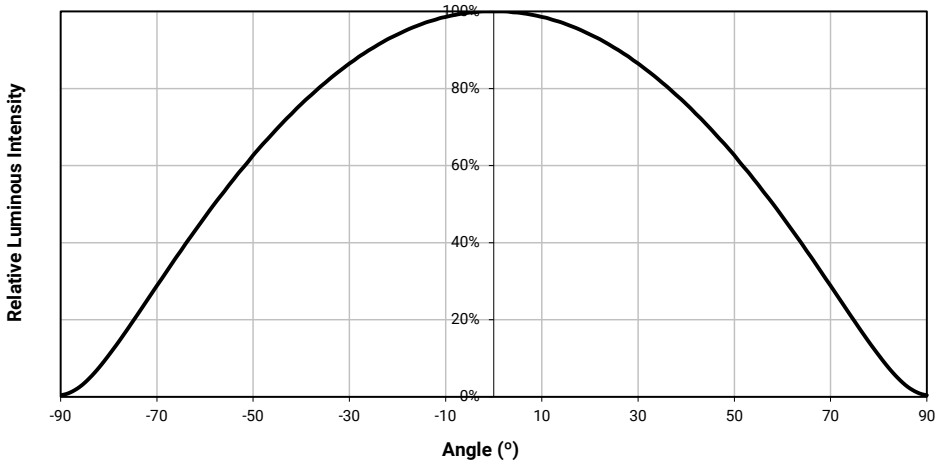

© 2022-2025 Cree LED. The information in this document is subject to change without notice. Cree®, XLamp®, EasyWhite®, the Cree logo, and the Cree LED logo are registered trademarks of Cree LED. UL® and the UL logo are registered trademarks of UL LLC.

Downloaded from Arrow.com.

PERFORMANCE GROUPS - CHROMATICITY (T_J = 85 °C)

XLamp CMB1825 LEDs are tested for chromaticity and placed into one of the regions defined by the following bounding coordinates.

EasyWhite Color Temperatures – 2-Step			
Code	CCT	x	y
40H	4000 K	0.3764	0.3711
		0.3784	0.3787
		0.3847	0.3826
		0.3825	0.3748
35H	3500 K	0.4022	0.3858
		0.4053	0.3942
		0.4125	0.3977
		0.4091	0.3891
30H	3000 K	0.4287	0.3975
		0.4328	0.4064
		0.4390	0.4086
		0.4347	0.3996
27H	2700 K	0.4524	0.4048
		0.4574	0.4140
		0.4633	0.4154
		0.4581	0.4062
24H	2400 K	0.4863	0.4110
		0.4914	0.4191
		0.4859	0.4185
		0.4809	0.4103
22H	2200 K	0.5004	0.4112
		0.5068	0.4206
		0.5128	0.4204
		0.5063	0.4110

EasyWhite Color Temperatures – 3-Step Ellipse						
Bin Code	CCT	Center Point		Major Axis	Minor Axis	Rotation Angle (°)
		x	y	a	b	
65G	6500 K	0.3123	0.3282	0.00666	0.00330	61.0
57G	5700 K	0.3287	0.3417	0.00738	0.00360	72.0
50G	5000 K	0.3447	0.3553	0.00840	0.00312	65.0
40G	4000 K	0.3818	0.3797	0.00939	0.00402	53.7
35G	3500 K	0.4073	0.3917	0.00927	0.00414	54.0
30G	3000 K	0.4338	0.4030	0.00834	0.00408	53.2
27G	2700 K	0.4577	0.4099	0.00834	0.00420	48.5
24G	2400 K	0.4861	0.4147	0.0085	0.00403	49.6
22G	2200 K	0.5066	0.4158	0.00980	0.00480	45.5

© 2022-2025 Cree LED. The information in this document is subject to change without notice. Cree®, XLamp®, EasyWhite®, the Cree logo, and the Cree LED logo are registered trademarks of Cree LED. UL® and the UL logo are registered trademarks of UL LLC.

Downloaded from Arrow.com.

PERFORMANCE GROUPS - CHROMATICITY (T_J = 85 °C) - CONTINUED

EasyWhite Color Temperatures – 5-Step Ellipse						
Bin Code	CCT	Center Point		Major Axis	Minor Axis	Rotation Angle (°)
		x	y	a	b	
65E	6500 K	0.3123	0.3282	0.01110	0.00550	61.0
57E	5700 K	0.3287	0.3417	0.01230	0.00600	72.0
50E	5000 K	0.3447	0.3553	0.01400	0.00520	65.0
40E	4000 K	0.3818	0.3797	0.01565	0.00670	53.7
30E	3000 K	0.4338	0.4030	0.01390	0.00680	53.2

© 2022-2025 Cree LED. The information in this document is subject to change without notice. Cree®, XLamp®, EasyWhite®, the Cree logo, and the Cree LED logo are registered trademarks of Cree LED. UL® and the UL logo are registered trademarks of UL LLC.

Downloaded from Arrow.com.

PREMIUM COLOR PERFORMANCE GROUPS - CHROMATICITY (T_J = 85 °C)

XLamp CMB1825 LEDs are tested for chromaticity and placed into one of the regions defined by the following bounding coordinates.

Fidelity

EasyWhite Color Temperatures – 2-Step			
Code	CCT	x	y
40H	4000 K	0.3764	0.3711
		0.3784	0.3787
		0.3847	0.3826
		0.3825	0.3748
35H	3500 K	0.4022	0.3858
		0.4053	0.3942
		0.4125	0.3977
		0.4091	0.3891
30H	3000 K	0.4287	0.3975
		0.4328	0.4064
		0.4390	0.4086
		0.4347	0.3996
27H	2700 K	0.4524	0.4048
		0.4574	0.4140
		0.4633	0.4154
		0.4581	0.4062
24H	2400 K	0.4863	0.4110
		0.4914	0.4191
		0.4859	0.4185
		0.4809	0.4103

Specialty

EasyWhite Color Temperatures – 2-Step			
Code	CCT	x	y
L7C	3000 K	0.4192	0.3754
		0.4224	0.3823
		0.4291	0.3847
		0.4257	0.3777

EasyWhite Color Temperatures – 3-Step Ellipse						
Bin Code	CCT	Center Point		Major Axis	Minor Axis	Rotation Angle (°)
		x	y	a	b	
31Q	3100 K	0.4236	0.3888	0.00848	0.00455	50.3
30Q	3000 K	0.4305	0.3935	0.00834	0.00408	53.2
30U	3000 K	0.4274	0.3837	0.00834	0.00408	53.2

© 2022-2025 Cree LED. The information in this document is subject to change without notice. Cree®, XLamp®, EasyWhite®, the Cree logo, and the Cree LED logo are registered trademarks of Cree LED. UL® and the UL logo are registered trademarks of UL LLC.

Downloaded from Arrow.com.

EASYWHITE® BINS PLOTTED ON THE 1931 CIE COLOR SPACE (T_J = 85 °C)

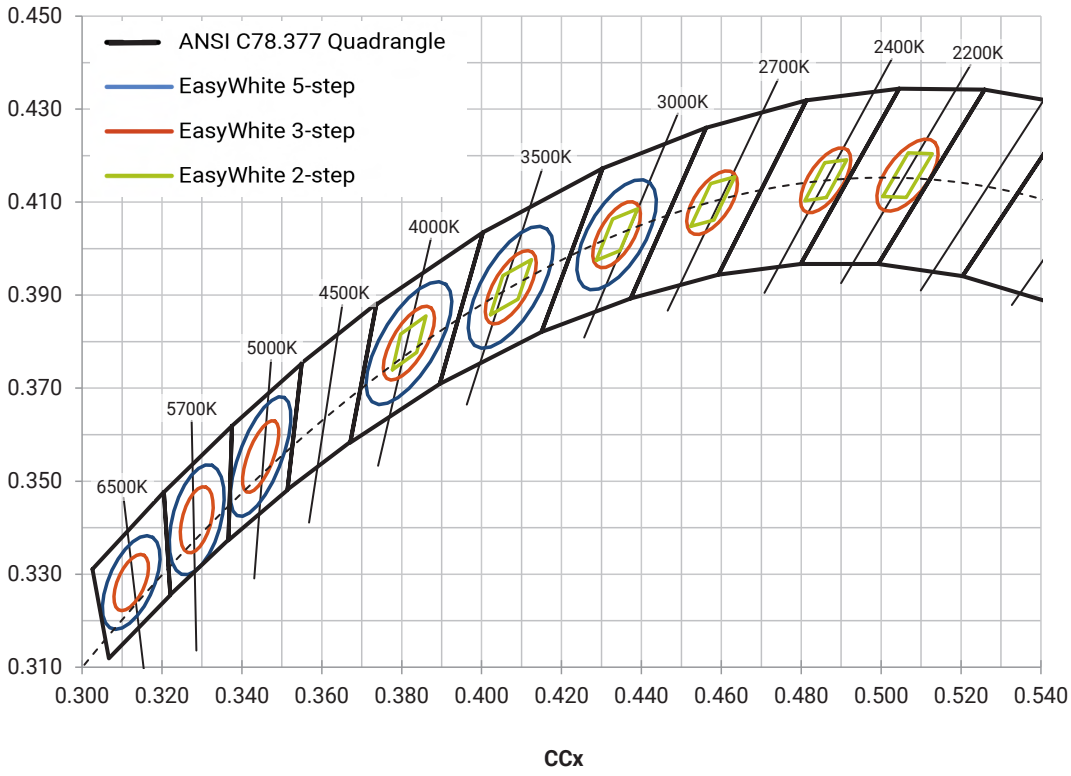

© 2022-2025 Cree LED. The information in this document is subject to change without notice. Cree®, XLamp®, EasyWhite®, the Cree logo, and the Cree LED logo are registered trademarks of Cree LED. UL® and the UL logo are registered trademarks of UL LLC.

Downloaded from Arrow.com.

PREMIUM COLOR BINS PLOTTED ON THE 1931 CIE COLOR SPACE (T_J = 85 °C)

Specialty (2-step)

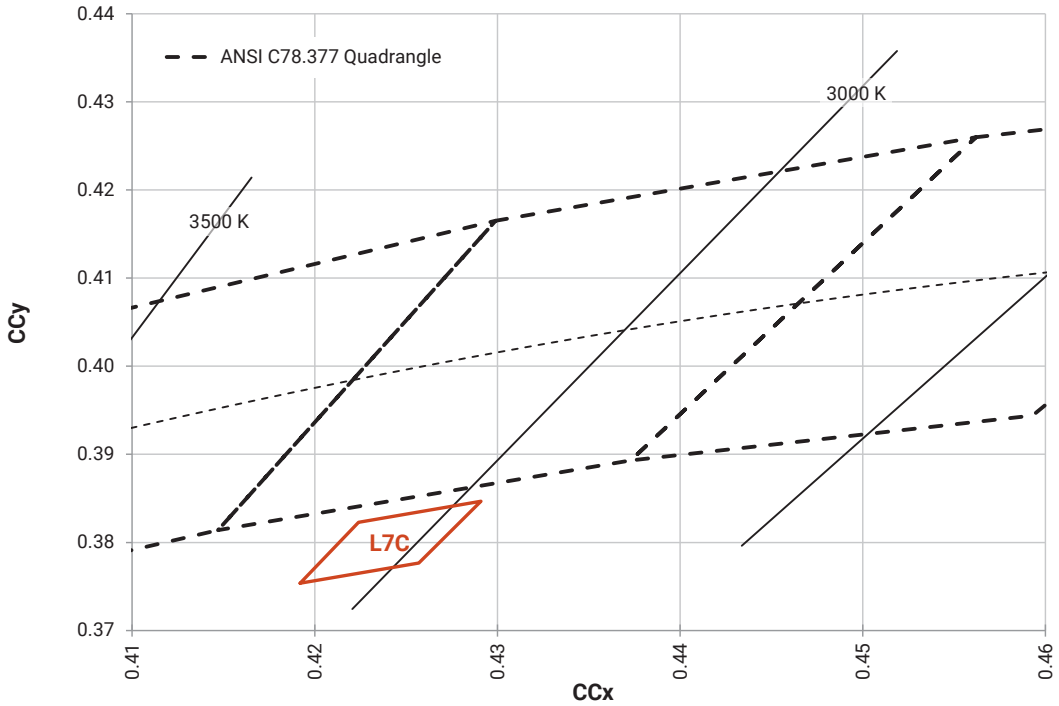

Specialty (3-step)

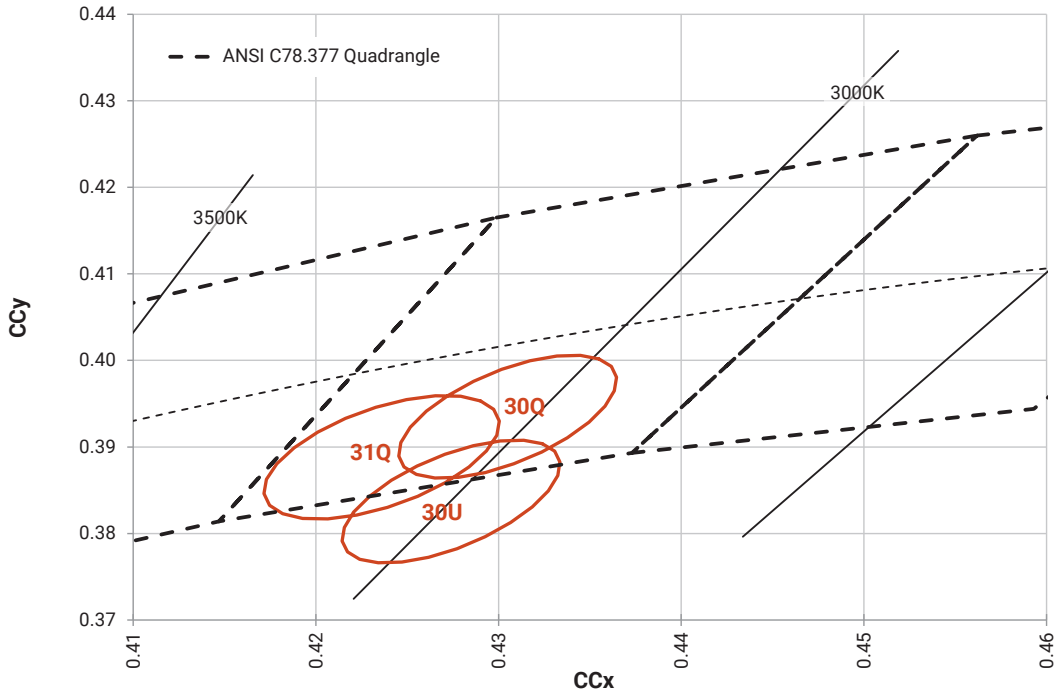

© 2022-2025 Cree LED. The information in this document is subject to change without notice. Cree®, XLamp®, EasyWhite®, the Cree logo, and the Cree LED logo are registered trademarks of Cree LED. UL® and the UL logo are registered trademarks of UL LLC.

Downloaded from Arrow.com.

BIN AND ORDER CODE FORMATS

Bin codes and order codes are configured as follows:

Order Code

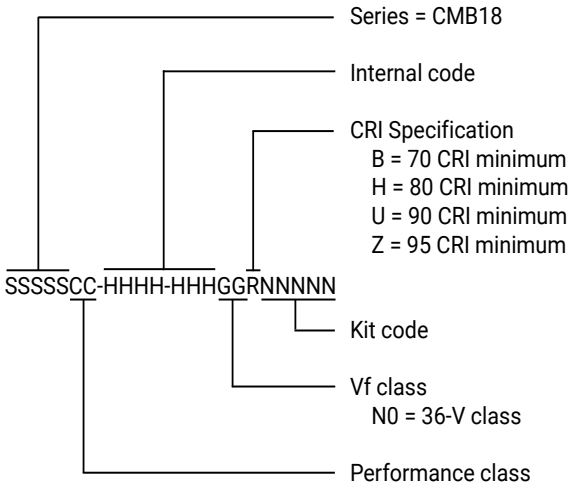

Bin Code

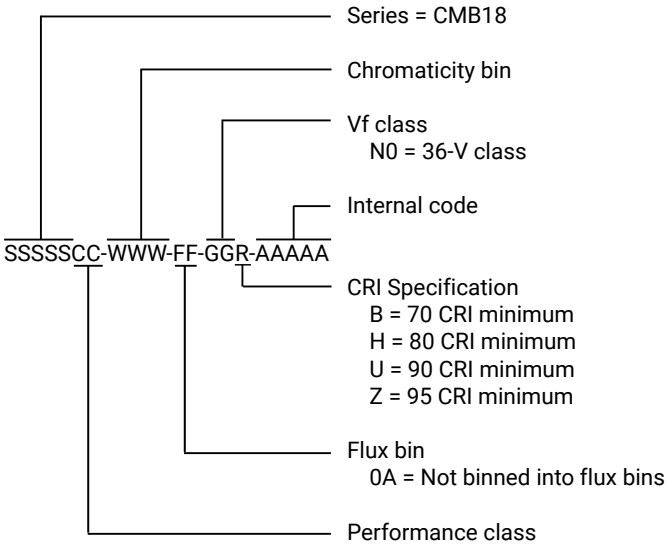

© 2022-2025 Cree LED. The information in this document is subject to change without notice. Cree®, XLamp®, EasyWhite®, the Cree logo, and the Cree LED logo are registered trademarks of Cree LED. UL® and the UL logo are registered trademarks of UL LLC.

Downloaded from Arrow.com.

MECHANICAL DIMENSIONS

Dimensions are in mm.

Tolerances unless otherwise specified: ±.13

x° ± 1°

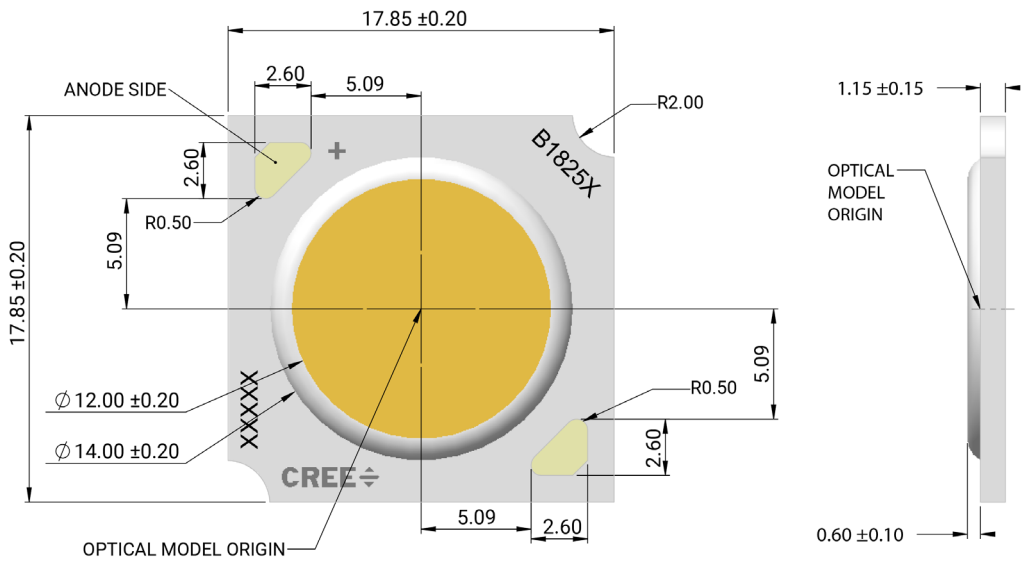

Meaning of LED marking

B1825N = 36-V CMB1825

X_1 X_2 X_3 X_4 X_5

X1 CCT
- 1 = 6500 K
- 2 = 5700 K
- 3 = 5000 K
- 5 = 4000 K
- 6 = 3500 K
- 7 = 3000 K
- 8 = 2700 K
- 9 = 2400 K
- A = 2200 K

X2
- M = EasyWhite or Fidelity LED on the black-body line
- Q = Specialty LED below the black-body line
- U = Specialty LED below the black-body line

X3 X4 Flux bin
- 0A = Not binned into flux bins

X5 CRI
- B = 70 CRI min
- H = 80 CRI min
- U = 90 CRI min
- Z = 95 CRI min

To assist in identifying the LED, CMB1825 LEDs provide a 2D barcode, positioned on the back of the LED, as shown in the following diagram. For a complete description of the bar code format, please refer to the XLamp CM Family LEDs soldering and handling document.

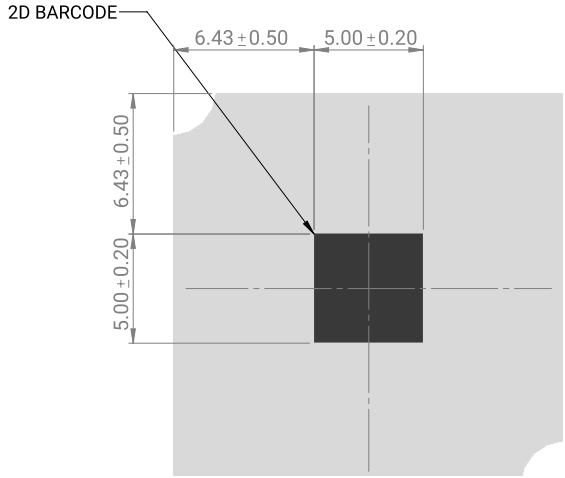

Tc measurement point: either the anode or cathode solder pad

© 2022-2025 Cree LED. The information in this document is subject to change without notice. Cree®, XLamp®, EasyWhite®, the Cree logo, and the Cree LED logo are registered trademarks of Cree LED. UL® and the UL logo are registered trademarks of UL LLC.

Downloaded from Arrow.com.

THERMAL DESIGN

The CMB family of LED arrays can include over a hundred different LED die inside one package, and thus over a hundred different junction temperatures (T_J). Cree LED has intentionally removed junction-temperature-based operating limits and replaced the commonplace maximum T_J calculations with maximum ratings based on forward current (I_F) and case temperature (Tc). No additional calculations are required to ensure that the CMB LED is being operated within its designed limits. LES temperature measurement provides additional verification of good thermal design. Please refer to page 2 for the Operating Limit specifications.

There is no need to calculate for T_J inside the package, as the thermal management design process, specifically from solder point (T_{SP}) to ambient (T_a), remains identical to any other LED component. For more information on thermal management of XLamp LEDs, please refer to the Thermal Management application note. For CMB soldering recommendations and more information on thermal interface materials (TIM), LES temperature measurement, and connection methods, please refer to the XLamp CM Family LEDs soldering and handling document.

To keep the CMB1825 LED at or below the maximum rated Tc, the case to ambient temperature thermal resistance (R_c-a) must be at or below the maximum R_c-a value shown on the following graph, depending on the operating environment. The y-axis in the graph is a base 10 logarithmic scale.

As the figure at right shows, the R_c-a value is the sum of the thermal resistance of the TIM (R_tim) plus the thermal resistance of the heat sink (R_hs).

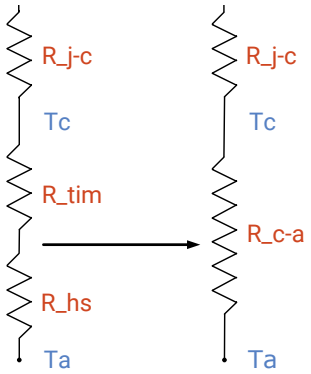

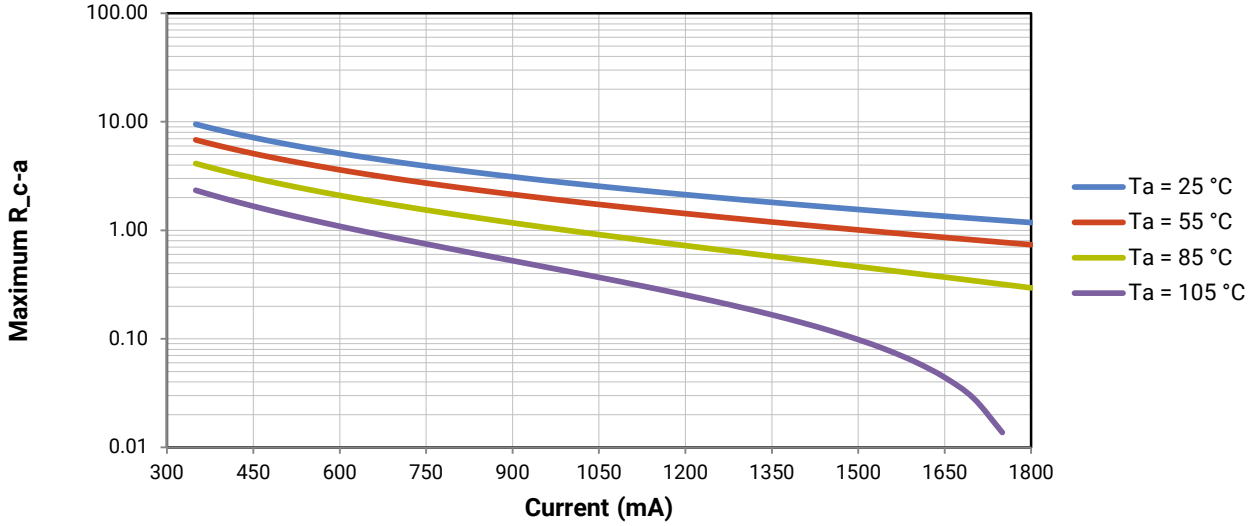

© 2022-2025 Cree LED. The information in this document is subject to change without notice. Cree®, XLamp®, EasyWhite®, the Cree logo, and the Cree LED logo are registered trademarks of Cree LED. UL® and the UL logo are registered trademarks of UL LLC.

Downloaded from Arrow.com.

NOTES

Measurements

The luminous flux, radiant power, chromaticity, forward voltage and CRI measurements in this document are binning specifications only and solely represent product measurements as of the date of shipment. These measurements will change over time based on a number of factors that are not within Cree LED's control and are not intended or provided as operational specifications for the products. Calculated values are provided for informational purposes only and are not intended or provided as specifications.

Pre-Release Qualification Testing

Please read the LED Reliability Overview for details of the qualification process Cree LED applies to ensure long-term reliability for XLamp LEDs and details of Cree LED's pre-release qualification testing for XLamp LEDs. Cree LED did not perform Room Temperature Operating Life (RTOL) testing on the CMB1825 LED.

Lumen Maintenance

Cree LED now uses standardized IES LM-80-08 and TM-21-11 methods for collecting long-term data and extrapolating LED lumen maintenance. For information on the specific LM-80 data sets available for this LED, refer to the public LM-80 results document.

Please read the Long-Term Lumen Maintenance application note for more details on Cree LED's lumen maintenance testing and forecasting. Please read the Thermal Management application note for details on how thermal design, ambient temperature, and drive current affect the LED junction temperature.

RoHS Compliance

The levels of RoHS restricted materials in this product are below the maximum concentration values (also referred to as the threshold limits) permitted for such substances, or are used in an exempted application, in accordance with EU Directive 2011/65/EC (RoHS2), as implemented January 2, 2013. RoHS Declarations for this product can be obtained from your Cree LED representative or from the Product Ecology section of the Cree LED website.

REACH Compliance

REACH substances of very high concern (SVHCs) information is available for this product. Since the European Chemical Agency (ECHA) has published notice of their intent to frequently revise the SVHC listing for the foreseeable future, please contact a Cree LED representative to insure you get the most up-to-date REACH SVHC Declaration. REACH banned substance information (REACH Article 67) is also available upon request.

UL® Recognized Component

This product meets the requirements to be considered a UL Recognized Component with Level 4 enclosure consideration. The LED package or a portion thereof has been investigated as a fire and electrical enclosure per ANSI/UL 8750.

Vision Advisory

WARNING: Do not look at an exposed lamp in operation. Eye injury can result. For more information about LEDs and eye safety, please refer to the LED Eye Safety application note.

© 2022-2025 Cree LED. The information in this document is subject to change without notice. Cree®, XLamp®, EasyWhite®, the Cree logo, and the Cree LED logo are registered trademarks of Cree LED. UL® and the UL logo are registered trademarks of UL LLC.

Downloaded from Arrow.com.

PACKAGING

CMB1825 LEDs are packaged in trays of 48. Five trays are sealed in an anti-static bag and placed inside an inner box, for a total of 240 LEDs per box. Each box contains LEDs from the same performance bin. Eight boxes are placed inside a carton, for a total of 1,920 LEDs per carton.

Dimensions are in mm.
Tolerance: ±.5

Load Tray

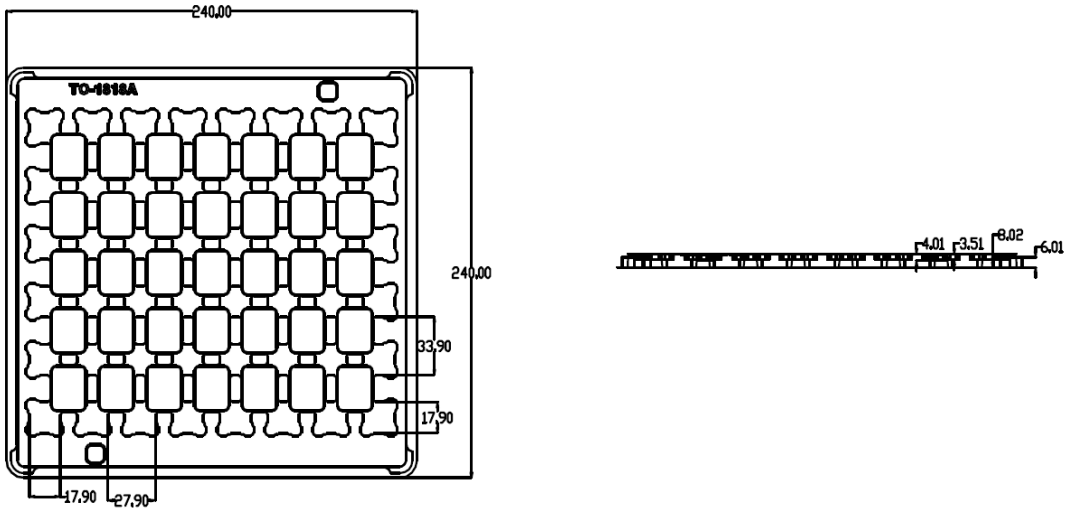

Upper Tray

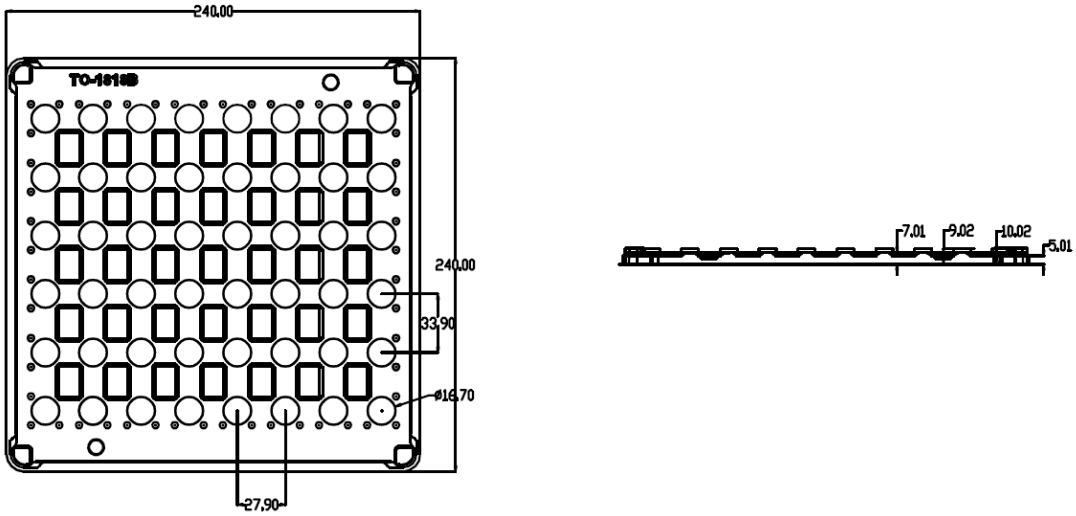

© 2022-2025 Cree LED. The information in this document is subject to change without notice. Cree®, XLamp®, EasyWhite®, the Cree logo, and the Cree LED logo are registered trademarks of Cree LED. UL® and the UL logo are registered trademarks of UL LLC.

Downloaded from Arrow.com.

PACKAGING - CONTINUED

CMB1825 LEDs are packaged in trays of 48. Five trays are sealed in an anti-static bag and placed inside an inner box, for a total of 240 LEDs per box. Each box contains LEDs from the same performance bin. Eight boxes are placed inside a carton, for a total of 1,920 LEDs per carton.

Dimensions are in mm.
Tolerance: ± 3 mm

Inner Box

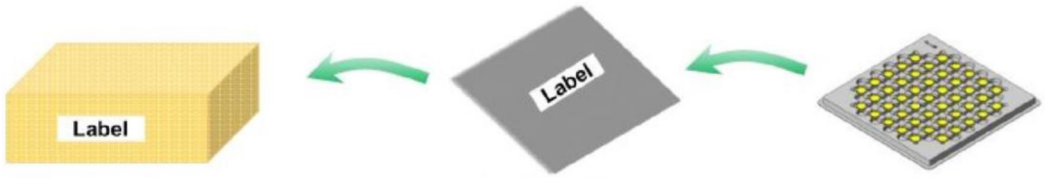

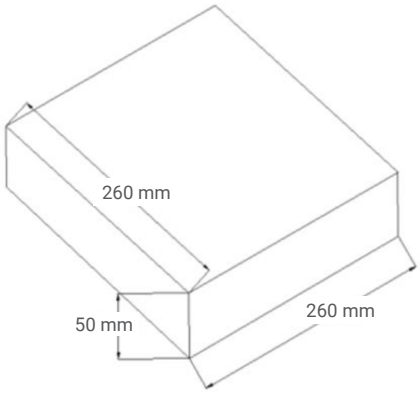

Outer Carton

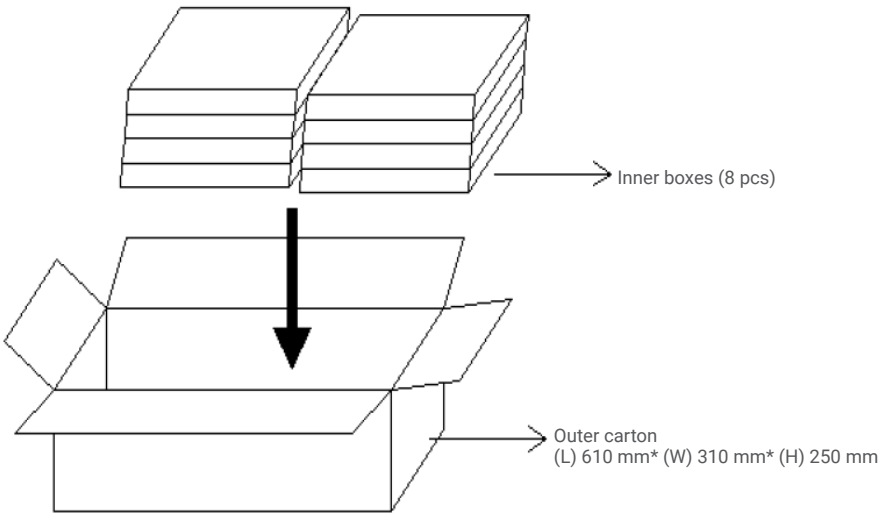

© 2022-2025 Cree LED. The information in this document is subject to change without notice. Cree®, XLamp®, EasyWhite®, the Cree logo, and the Cree LED logo are registered trademarks of Cree LED. UL® and the UL logo are registered trademarks of UL LLC.

Downloaded from Arrow.com.