Datasheet

Type 2EA Wi-Fi™ + Bluetooth® Module

Infineon CYW55573 Chipset for 802.11a/b/g/n/ac/ax 2x2 MIMO + Bluetooth Datasheet 5.3 - Rev. 16

- Design Name: Type 2EA
- Module P/N: LBEE5XV2EA-802

Downloaded from Arrow.com.

Table of Contents

1 Scope....8
2 Key Feature....8
3 Ordering Information....8
4 Block Diagram....9
5 Certification Information....11
5.1 Radio Certification....11
5.2 Radio Regulatory Certification by Country....11
5.3 Bluetooth Qualification....11
6 Dimensions, Markings, and Terminal Configurations....12
7 Module Pin Descriptions....13
7.1 Module Pin Layout (Top View)....13
7.2 Pin Descriptions....15
8 Absolute Maximum Ratings....19
9 Operating Condition....19
10 External LPO_IN Signal Requirement....19
11 Strapping Options....20
12 I/O State....20
13 Power-On Sequence....23
13.1 Power-On Sequence for WLAN ON and BT ON....24
13.2 Power-On Sequence for WLAN OFF and BT OFF....24
13.3 Power-On Sequence for WLAN ON and BT OFF....25
13.4 Power-On Sequence for WLAN OFF and BT ON....25
14 Digital I/O Requirement....26
15 Interface Timing and AC Characteristics....26
15.1 Bluetooth UART Timing....26
15.2 Bluetooth PCM Interface Timing....27
15.2.1 Data Formatting....27
15.2.2 Wideband Speech Support....27
15.2.3 Short Frame Sync - Master Mode....27
15.2.4 Short Frame Sync - Slave Mode....29
15.2.5 Long Frame Sync - Master Mode....29
15.2.6 Long Frame Sync - Slave Mode....30
15.3 Bluetooth I^2S Interface Timing....31
15.4 WLAN SDIO Timing....33
15.4.1 SDIO Default Mode Timing....33

Downloaded from Arrow.com.

15.4.2 SDIO High-Speed Mode Timing....34
15.4.3 SDIO Bus Timing Specifications in SDR Modes....35
15.4.4 SDIO Bus Timing Specifications in DDR50 Mode....38
15.5 PCI Express Interface Parameters....39
16 DC/RF Characteristics....41
16.1 DC/RF Characteristics for IEEE 802.11b - 2.4 GHz....42
16.1.1 High-Rate Condition for IEEE 802.11b - 2.4 GHz....42
16.1.2 Low-Rate Condition for IEEE 802.11b - 2.4 GHz....43
16.2 DC/RF Characteristics for IEEE 802.11g - 2.4 GHz....44
16.2.1 High-Rate Condition for IEEE 802.11g - 2.4 GHz....44
16.2.2 Low-Rate Condition for IEEE 802.11g - 2.4 GHz....45
16.3 DC/RF Characteristics for IEEE 802.11n - 2.4 GHz....46
16.3.1 High-Rate Condition for IEEE 802.11n - 2.4 GHz....46
16.3.2 Low-Rate Condition for IEEE 802.11n - 2.4 GHz....47
16.4 DC/RF Characteristics for IEEE 802.11ax (HE20) - 2.4 GHz....48
16.4.1 High-Rate Condition for IEEE 802.11ax (HE20) - 2.4 GHz....48
16.4.2 Low-Rate Condition for IEEE 802.11ax (HE20) - 2.4 GHz....49
16.5 DC/RF Characteristics for IEEE 802.11a - 5 GHz....50
16.5.1 High-Rate Condition for IEEE 802.11a - 5 GHz....50
16.5.2 Low-Rate Condition for IEEE 802.11a - 5 GHz....51
16.6 DC/RF Characteristics for IEEE 802.11n (HT20) - 5 GHz....52
16.6.1 High-Rate Condition for IEEE 802.11n (HT20) - 5 GHz....52
16.6.2 Low-Rate Condition for IEEE 802.11n (HT20) - 5 GHz....53
16.7 DC/RF Characteristics for IEEE 802.11n (HT40) - 5 GHz....54
16.7.1 High-Rate Condition for IEEE 802.11n (HT40) - 5 GHz....54
16.7.2 Low-Rate Condition for IEEE 802.11n (HT40) - 5 GHz....55
16.8 DC/RF Characteristics for IEEE 802.11ac (VHT40) - 5 GHz....56
16.8.1 High-Rate Condition for IEEE 802.11ac (VHT40) - 5 GHz....56
16.8.2 Low-Rate Condition for IEEE 802.11ac (VHT40) - 5 GHz....57
16.9 DC/RF Characteristics for IEEE 802.11ac (VHT80) - 5 GHz....58
16.9.1 High-Rate Condition for IEEE 802.11ac (VHT80) - 5 GHz....58
16.9.2 Low-Rate Condition for IEEE 802.11ac (VHT80) - 5 GHz....59
16.10 DC/RF Characteristics for IEEE 802.11ax (HE20) - 5 GHz....60
16.10.1 High-Rate Condition for IEEE 802.11ax (HE20) - 5 GHz....60
16.10.2 Low-Rate Condition for IEEE 802.11ax (HE20) - 5 GHz....61
16.11 DC/RF Characteristics for IEEE 802.11ax (HE40) - 5 GHz....62
16.11.1 High-Rate Condition for IEEE 802.11ax (HE40) - 5 GHz....62

Downloaded from Arrow.com.

16.11.2 Low-Rate Condition for IEEE 802.11ax (HE40) - 5 GHz 63
16.12 DC/RF Characteristics for IEEE 802.11ax (HE80) - 5 GHz 64
16.12.1 High-Rate Condition for IEEE 802.11ax (HE80) - 5 GHz 64
16.12.2 Low-Rate Condition for IEEE 802.11ax (HE80) - 5 GHz 65
16.13 DC/RF Characteristics for IEEE 802.11a - 6 GHz 66
16.13.1 High-Rate Condition for IEEE 802.11a - 6 GHz 66
16.13.2 Low-Rate Condition for IEEE 802.11a - 6 GHz 67
16.14 DC/RF Characteristics for IEEE 802.11ax (HE20) - 6 GHz 68
16.14.1 High-Rate Condition for IEEE 802.11ax (HE20) - 6 GHz 68
16.14.2 Low-Rate Condition for IEEE 802.11ax (HE20) - 6 GHz 69
16.15 DC/RF Characteristics for IEEE 802.11ax (HE40) - 6 GHz 70
16.15.1 High-Rate Condition for IEEE 802.11ax (HE40) - 6 GHz 70
16.15.2 Low-Rate Condition for IEEE 802.11ax (HE40) - 6 GHz 71
16.16 DC/RF Characteristics for IEEE 802.11ax (HE80) - 6 GHz 72
16.16.1 High-Rate Condition for IEEE 802.11ax (HE80) - 6 GHz 72
16.16.2 Low-Rate Condition for IEEE 802.11ax (HE80) - 6 GHz 73
16.17 DC/RF Characteristics for Bluetooth 74
16.18 DC/RF Characteristics for Bluetooth Low Energy 76
17 Land Pattern 77
18 Tape And Reel Packing 78
18.1 Dimensions of Tape (Plastic Tape) 78
18.2 Dimensions of Reel 79
18.3 Taping Diagrams 80
18.4 Leader and Tail Tape 81
18.5 Humidity Proof Packaging 82
19 Notice 83
19.1 Storage Conditions 83
19.2 Handling Conditions 83
19.3 Standard PCB Design (Land Pattern and Dimensions) 83
19.4 Notice for Chip Placer 84
19.5 Soldering Conditions 84
19.6 Cleaning 85
19.7 Operational Environment Conditions 85
19.8 Input Power Capacity 85
20 Precondition to Use Our Products 86
Revision History 88

Downloaded from Arrow.com.

Figures

Figure 1: Block Diagram - Type 2EA for SANT (Two Antenna) Configuration 9
Figure 2: Block Diagram - Type 2EA for DANT (Three Antenna) Configuration 10
Figure 3: Dimensions, Markings and Terminal Configurations (Unit: Millimeters)....12
Figure 4: Structure 13
Figure 5: Pin Layout - Top View....13
Figure 6: Power-On Sequence - WLAN ON and BT ON....24
Figure 7: Power-On Sequence - WLAN OFF and BT OFF 24
Figure 8: Power-On Sequence - WLAN ON and BT OFF 25
Figure 9: Power-On Sequence - WLAN OFF and BT ON 25
Figure 10: Bluetooth UART Timing Signal 26
Figure 11: Short Frame Sync Signal - Master Mode....27
Figure 12: Short Frame Sync Signal - Slave Mode....29
Figure 13: Long Frame Sync Signal - Master Mode 29
Figure 14: Long Frame Sync Signal - Slave Mode 30
Figure 15: I^2S Transmitter Timing Signal 32
Figure 16: I^2S Receiver Timing Signal 33
Figure 17: SDIO Protocol Timing Diagram - Default Mode 33
Figure 18: SDIO Protocol Timing Diagram - High-Speed Mode 34
Figure 19: SDIO Clock Timing Diagram - SDR Mode 35
Figure 20: SDIO Bus Input Timing Diagram - SDR Mode....36
Figure 21: SDIO Bus Output Timing Diagram - SDR Modes Up To 100 MHz 36
Figure 22: SDIO Bus Output Timing Diagram - SDR Modes 100 MHz to 208 MHz....37
Figure 23: Δtop Consideration for Variable Data Window - SDR 104 Mode....37
Figure 24: SDIO Clock Timing Diagram - DDR50 Mode....38
Figure 25: SDIO Data Timing Diagram - DDR 50 Mode 38
Figure 26: Burst Current Definition 41
Figure 27: Land Pattern - Top View 77
Figure 28: Dimensions of Tape (Unit: mm) 78
Figure 29: Dimensions of Reel (Unit: mm)....79
Figure 30: Taping Diagrams 80
Figure 31: Leader and Tail Tape....81
Figure 32: Peeling Off Force....82
Figure 33: Humidity Proof Packaging 82
Figure 34: Reflow Soldering Standard Conditions (Example)....84

Downloaded from Arrow.com.

Tables

Table 1: Document Conventions....7
Table 2: Ordering Information....8
Table 3: Radio Certification....11
Table 4: Markings....12
Table 5: Dimensions (In Millimeters)....12
Table 6: Terminal Configurations....14
Table 7: Pin Descriptions....15
Table 8: Absolute Maximum Ratings....19
Table 9: Operating Conditions....19
Table 10: External LPO_IN Signal Requirement....19
Table 11: Strapping Options....20
Table 12: I/O State Table....20
Table 13: Digital I/O Requirements....26
Table 14: Bluetooth UART Timing Signal Parameters....26
Table 15: Short Frame Sync Signal Parameters - Master Mode....28
Table 16: Short Frame Sync Signal Parameters - Slave Mode....29
Table 17: Long Frame Sync Signal Parameters - Master Mode....30
Table 18: Long Frame Sync Signal Parameters - Slave Mode....30
Table 19: Timing for I^2S Transmitters and Receivers....31
Table 20: SDIO Protocol Timing Parameters - Default Mode....34
Table 21: SDIO Protocol Timing Parameters - High-Speed Mode....34
Table 22: SDIO Clock Timing Parameters - SDR Mode....35
Table 23: SDIO Bus Input Timing Parameters - SDR Mode....36
Table 24: SDIO Bus Output Timing Parameters - SDR Modes Up To 100 MHz....37
Table 25: SDIO Bus Output Timing Parameters - SDR Modes 100 MHz to 208 MHz....37
Table 26: SDIO Clock Timing Parameters - DDR50 Mode....38
Table 27: SDIO Data Timing Parameters - DDR50 Mode....38
Table 28: PCI Express Interface Parameters....39
Table 29: DC/RF Characteristics for IEEE 802.11b - 2.4 GHz....42
Table 30: High-Rate Conditions for IEEE 802.11b - 2.4 GHz....42
Table 31: Low-Rate Conditions for IEEE 802.11b - 2.4 GHz....43
Table 32: DC/RF Characteristics for IEEE 802.11g - 2.4 GHz....44
Table 33: High-Rate Condition for IEEE 802.11g - 2.4 GHz....44
Table 34: Low-Rate Condition for IEEE 802.11g - 2.4 GHz....45
Table 35: DC/RF Characteristics for IEEE 802.11n - 2.4 GHz....46
Table 36: High-Rate Condition for IEEE 802.11n - 2.4 GHz....46
Table 37: Low-Rate Condition for IEEE 802.11n - 2.4 GHz....47
Table 38: DC/RF Characteristics for IEEE 802.11ax (HE20) - 2.4 GHz....48
Table 39: High-Rate Condition for IEEE 802.11ax (HE20) - 2.4 GHz....48

Downloaded from Arrow.com.

Table 40: Low-Rate Condition for IEEE 802.11ax (HE20) - 2.4 GHz....49
Table 41: DC/RF Characteristics for IEEE 802.11a - 5 GHz....50
Table 42: High-Rate Condition for IEEE 802.11a - 5 GHz....50
Table 43: Low-Rate Condition for IEEE 802.11a - 5 GHz....51
Table 44: DC/RF Characteristics for IEEE 802.11n (HT20) - 5 GHz....52
Table 45: High-Rate Condition for IEEE 802.11n (HT20) - 5 GHz....52
Table 46: Low-Rate Condition for IEEE 802.11n (HT20) - 5 GHz....53
Table 47: DC/RF Characteristics for IEEE 802.11n (HT40) - 5 GHz....54
Table 48: High-Rate Condition for IEEE 802.11n (HT40) - 5 GHz....54
Table 49: Low-Rate Condition for IEEE 802.11n (HT40) - 5 GHz....55
Table 50: DC/RF Characteristics for IEEE 802.11ac (VHT40) - 5 GHz....56
Table 51: High-Rate Condition for IEEE 802.11ac (VHT40) - 5 GHz....56
Table 52: Low-Rate Condition for IEEE 802.11ac (VHT40) - 5 GHz....57
Table 53: DC/RF Characteristics for IEEE 802.11ac (VHT80) - 5 GHz....58
Table 54: High-Rate Condition for IEEE 802.11ac (VHT80) - 5 GHz....58
Table 55: Low-Rate Condition for IEEE 802.11ac (VHT80) - 5 GHz....59
Table 56: DC/RF Characteristics for IEEE 802.11ax (HE20) - 5 GHz....60
Table 57: High-Rate Condition for IEEE 802.11ax (HE20) - 5 GHz....60
Table 58: Low-Rate Condition for IEEE 802.11ax (HE20) - 5 GHz....61
Table 59: DC/RF Characteristics for IEEE 802.11ax (HE40) - 5 GHz....62
Table 60: High-Rate Condition for IEEE 802.11ax (HE40) - 5 GHz....62
Table 61: Low-Rate Condition for IEEE 802.11ax (HE40) - 5 GHz....63
Table 62: DC/RF Characteristics for IEEE 802.11ax (HE80) - 5 GHz....64
Table 63: High-Rate Condition for IEEE 802.11ax (HE80) - 5 GHz....64
Table 64: Low-Rate Condition for IEEE 802.11ax (HE80) - 5 GHz....65
Table 65: DC/RF Characteristics for IEEE 802.11a - 6 GHz....66
Table 66: High-Rate Condition for IEEE 802.11a - 6 GHz....66
Table 67: Low-Rate Condition for IEEE 802.11a - 6 GHz....67
Table 68: DC/RF Characteristics for IEEE 802.11ax (HE20) - 6 GHz....68
Table 69: High-Rate Condition for IEEE 802.11ax (HE20) - 6 GHz....68
Table 70: Low-Rate Condition for IEEE 802.11ax (HE20) - 6 GHz....69
Table 71: DC/RF Characteristics for IEEE 802.11ax (HE40) - 6 GHz....70
Table 72: High-Rate Condition for IEEE 802.11ax (HE40) - 6 GHz....70
Table 73: Low-Rate Condition for IEEE 802.11ax (HE40) - 6 GHz....71
Table 74: DC/RF Characteristics for IEEE 802.11ax (HE80) - 6 GHz....72
Table 75: High-Rate Condition for IEEE 802.11ax (HE80) - 6 GHz....72
Table 76: Low-Rate Condition for IEEE 802.11ax (HE80) - 6 GHz....73
Table 77: DC/RF Characteristics for Bluetooth....74
Table 78: DC/RF Characteristics for BLE....76
Table 79: Taping Specifications....80

Downloaded from Arrow.com.

About This Document

Type 2EA is a small and high-performance module based on Infineon CYW55573 combo chipset, supporting IEEE 802.11a/b/g/n/ac/ax 2x2 MIMO + Bluetooth 5.3 BR/EDR/LE. This datasheet describes Type 2EA module in detail.

Please be aware that an important notice concerning availability, standard warranty and use in critical applications of Murata products and disclaimers thereto appears at the end of this specification sheet.

Audience & Purpose

Intended audience includes any customer looking to integrate this module into their product, specifically RF, hardware, software, and systems engineers.

Document Conventions

Table 1 describes the document conventions.

Table 1: Document Conventions

Conventions	Description
	Warning Note Indicates very important note. Users are strongly recommended to review.
	Info Note Intended for informational purposes. Users should review.
	Menu Reference Indicates menu navigation instructions. **Example**: Insert→Tables→Quick Tables→Save Selection to Gallery
	External Hyperlink This symbol indicates a hyperlink to an external document or website. **Example**: Murata Click on the text to open the external link.
	Internal Hyperlink This symbol indicates a hyperlink within the document. **Example**: Scope Click on the text to open the link.
`Console input/output or code snippet`	**Console I/O or Code Snippet** This text ***Style*** denotes console input/output or a code snippet.
`# Console I/O comment` `// Code snippet comment`	**Console I/O or Code Snippet Comment** This text ***Style*** denotes a console input/output or code snippet comment. • Console I/O comment (preceded by "#") is for informational purposes only and does not denote actual console input/output. • Code Snippet comment (preceded by "//") may exist in the original code.

Downloaded from Arrow.com.

1 Scope

This specification characterizes the IEEE 802.11a/b/g/n/ac/ax 2x2 MIMO + Bluetooth 5.3 BR/EDR/LE combo module.

2 Key Feature

- Infineon CYW55573 inside
- Supports IEEE 802.11a/b/g/n/ac/ax: Tri band 2.4 GHz, 5 GHz, and 6 GHz
- 2x2 MIMO with 20 MHz, 40 MHz and 80 MHz channels
- Up to MCS11 data rates (1200 Mbps)
- Supports Bluetooth specification version 5.3
- WLAN interface: PCIe 3.0 Gen2, SDIO 3.0/2.0
- Bluetooth interface: HCI UART, PCM, and I2S
- Temperature Range: -40 °C to 85 °C
- Dimensions 12.5 x 9.4 x 1.2 mm
- Weight: 360 mg
- MSL: 3
- Surface-mount type
- RoHS compliant
- Total Fit: 286

3 Ordering Information

The ordering information are shown in **Table 2.**

Table 2: Ordering Information

Ordering Part Number	Description
LBEE5XV2EA-802	Module Order
LBEE5XV2EA-SMP	Sample module order (If module samples are not available through distribution, contact Murata referencing this part number)
EAR00413	Embedded Artists Type 2EA M.2 EVB (default EVB available through distribution)

Downloaded from Arrow.com.

4 Block Diagram

Figure 1 and **Figure 2** show the block diagrams for shared antenna and dedicated antenna.

Figure 1: Block Diagram - Type 2EA for SANT (Two Antenna) Configuration

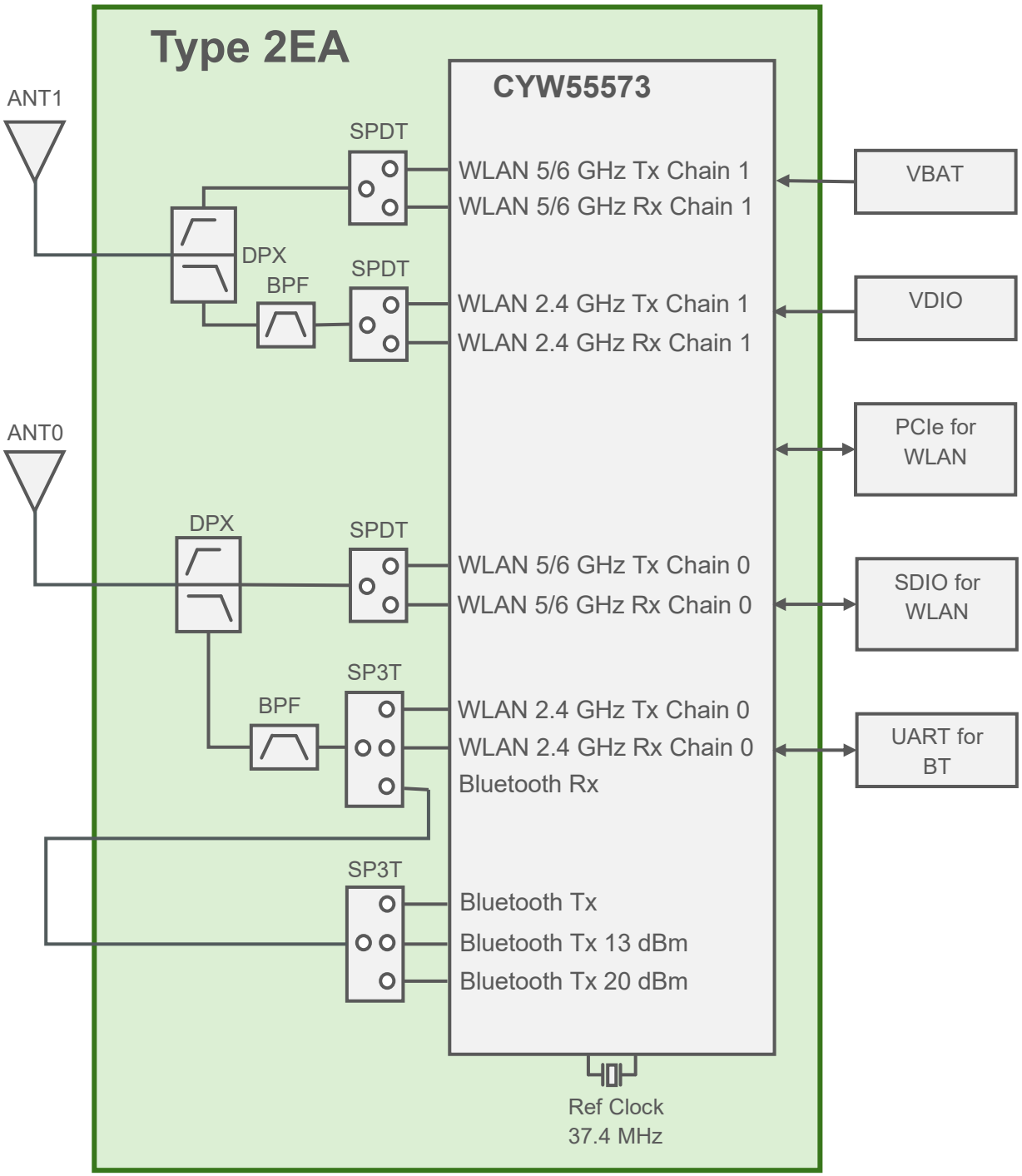

Downloaded from Arrow.com.

Figure 2: Block Diagram - Type 2EA for DANT (Three Antenna) Configuration

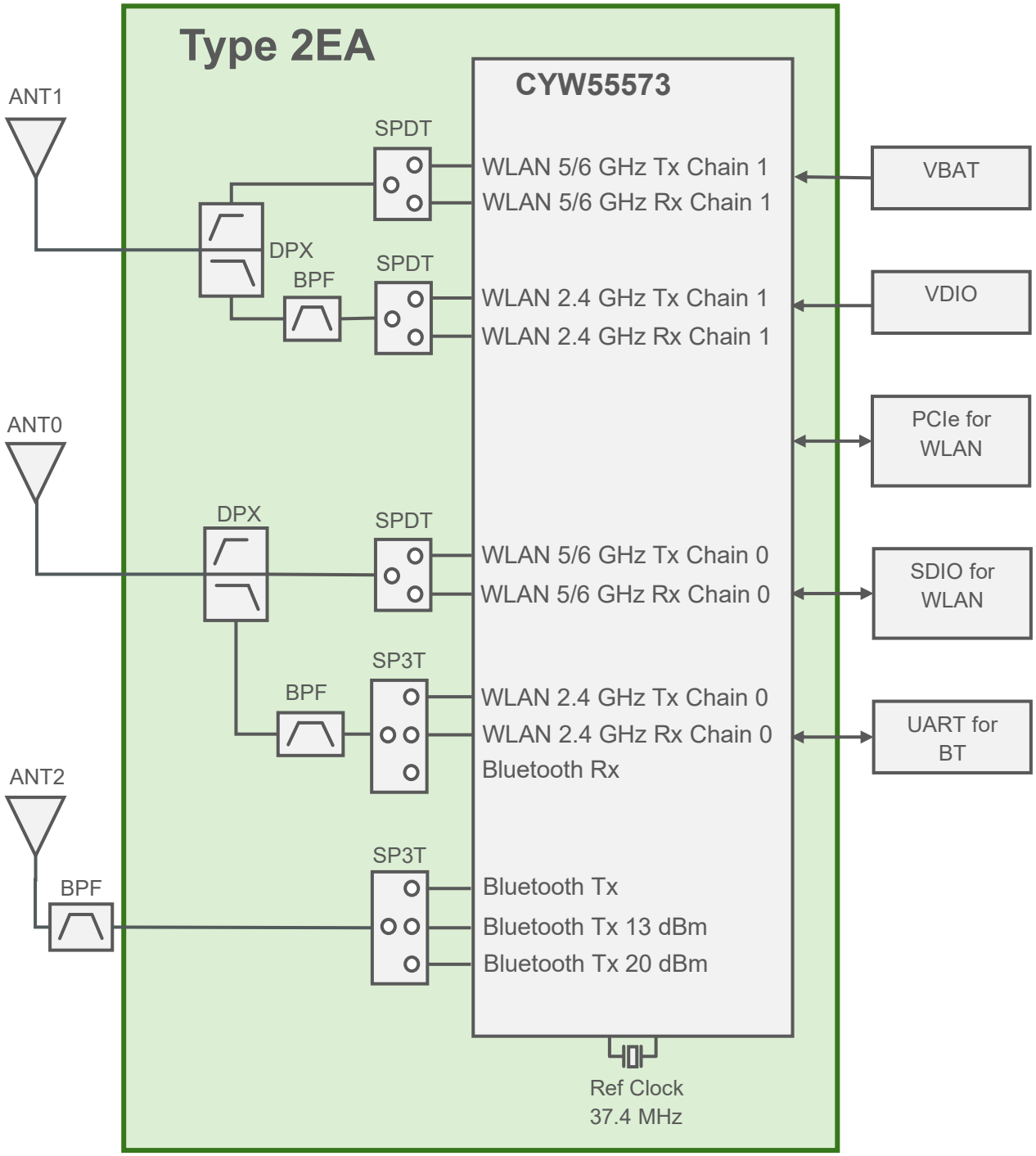

Downloaded from Arrow.com.

5 Certification Information

This section has information about radio and Bluetooth certification.

5.1 Radio Certification

Table 3 describes the radio certification information.

Table 3: Radio Certification

Country	ID	Country Code
USA (FCC)	VPYLBEE5XV2EA	US
Canada (ISED)	772C-LBEE5XV2EA	CA
Europe	EN300328/301893, EN300440, Draft EN 303687 The conducted test reports are prepared.	DE
Japan (MIC)	Japanese type certification is prepared. R 001-P01862	JP

Each country's code is defined by Murata's clm_blob file. Please ask your contact person from Murata.

5.2 Radio Regulatory Certification by Country

Murata have prepared the document about Radio Regulatory Certification separately.

This document is designed to ensure that module manufacturers correctly communicate the necessary information to host manufacturers that incorporate their modules.

Refer to 【Regulatory Information】 : Type 2EA Radio Law Approval Application Note for Radio Law Certification user manual.

If you don't follow the rule written in Type 2EA Radio Law Approval Application Note, there is a risk of conflict Radio Law Certification.

Please be sure to check the document.

5.3 Bluetooth Qualification

- QDID: 200016
- For supported Bluetooth functions, refer to Bluetooth SIG site.

Downloaded from Arrow.com.

6 Dimensions, Markings, and Terminal Configurations

This section has information on dimensions, markings, and terminal configurations for Type 2EA as shown in **Figure 3**. **Table 4** describes the markings shown in **Figure 3**. **Table 5** describes the dimensions.

Figure 3: Dimensions, Markings and Terminal Configurations (Unit: Millimeters)

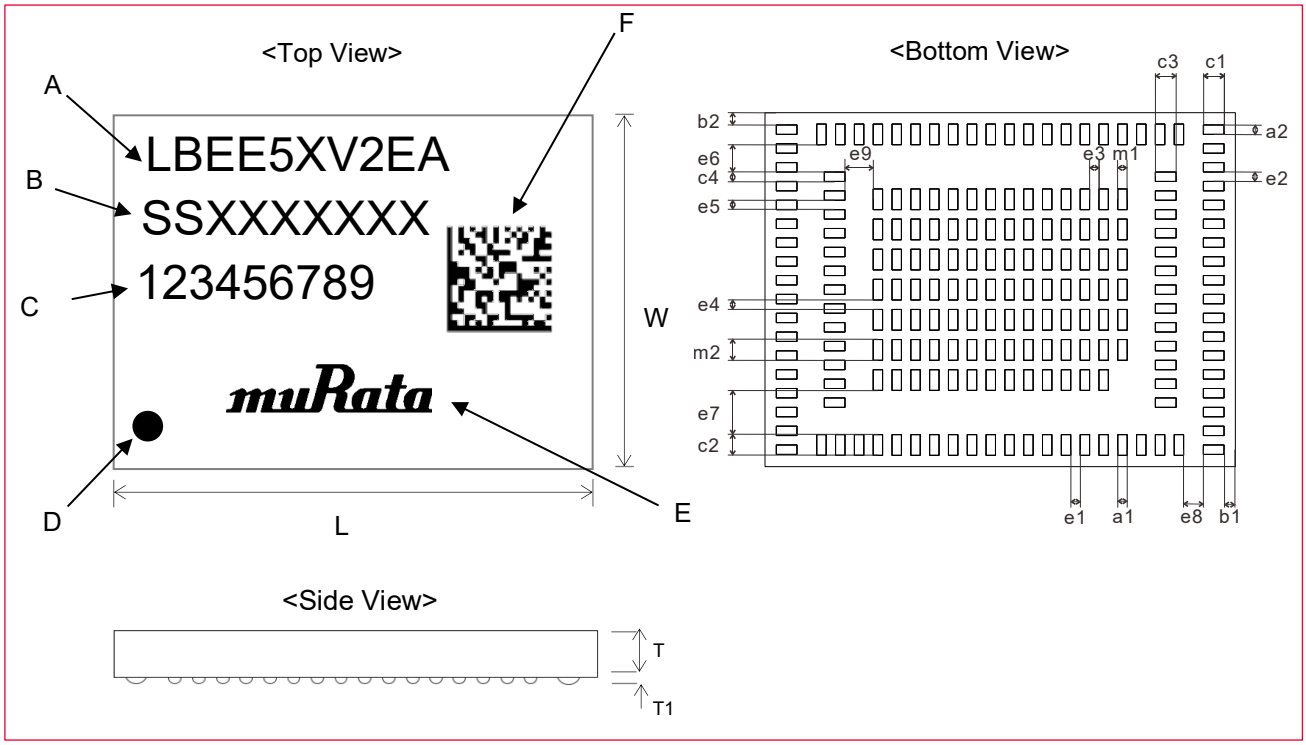

Table 4: Markings

Marking	Meaning
A	Module Part Number
B	Inspection Number
C	Serial Number
D	Pin 1 Marking
E	Murata Logo
F	2D code

Table 5: Dimensions (In Millimeters)

Mark	Dimensions	Mark	Dimensions	Mark	Dimensions	Mark	Dimensions
L	12.5 ± 0.2	W	9.4 ± 0.2	T	1.2 maximum	T1	0.04 (typical)
a1	0.25 ± 0.1	a2	0.25 ± 0.1	b1	0.30 ± 0.2	b2	0.325 ± 0.2
c1	0.55 ± 0.1	c2	0.55 ± 0.1	c3	0.55 ± 0.1	c4	0.25 ± 0.1
e1	0.25 ± 0.1	e2	0.25 ± 0.1	e3	0.25 ± 0.1	e4	0.25 ± 0.1
e5	0.25 ± 0.1	e6	0.725 ± 0.1	e7	1.175 ± 0.1	e8	0.525 ± 0.1
e9	0.75 ± 0.1	m1	0.25 ± 0.1	m2	0.55 ± 0.1		

Downloaded from Arrow.com.

Figure 4 shows the Type 2EA structure.

Figure 4: Structure

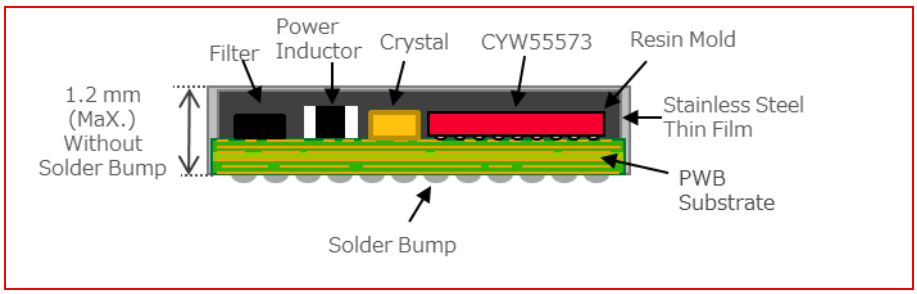

The sides of the module are GND shielded. In order to avoid contact between the GND shield and the electrodes on the mother board, please carefully evaluate the standoff before use the module.

7 Module Pin Descriptions

This section has the pin descriptions and pin assignments layout descriptions of Type 2EA.

7.1 Module Pin Layout (Top View)

The pin assignment (top view) layout is shown in **Figure 5**.

Figure 5: Pin Layout - Top View

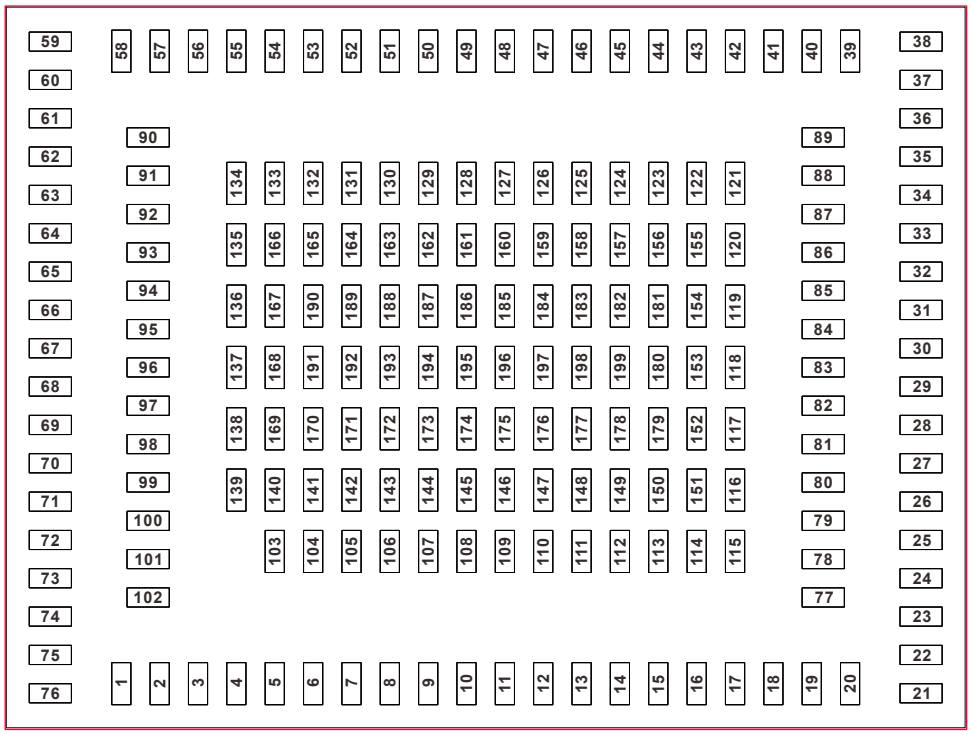

Downloaded from Arrow.com.

Table 6 illustrates the terminal configurations.

Table 6: Terminal Configurations

No.	Terminal Name	No.	Terminal Name	No.	Terminal Name
1	PCIE_PERST_L	37	ANT1	73	GND
2	PCIE_CLKREQ_L	38	GND	74	PCIE_REFCLKP
3	PCIE_PME_L	39	GND	75	PCIE_REFCLKN
4	GND	40	GPIO_8	76-95	GND
5	BT_PCM_SYNC	41	GPIO_1_WL_DEV_WAKE	96	MIC_P
6	BT_PCM_IN	42	GND	97	MIC_N
7	BT_PCM_CLK	43	GPIO_0_WL_HOST_WAKE	98	GND
8	BT_PCM_OUT	44	GPIO_7	99	BT_I2S_DO
9	GND	45	BT_REG_ON	100	BT_I2S_WS
10	I2S_DI	46	GND	101	BT_I2S_CLK
11	I2S_MCK	47	GND	102	BT_I2S_DI
12	I2S_SCK	48	GND	103	GND
13	I2S_LRCK	49	GND	104	GND
14	I2S_DO	50	GND	105	DMIC_DATA
15	GND	51	LPO_IN	106	DMIC_CLK
16	BT_UART_RXD	52	GND	107	GND
17	BT_UART_RTS_N	53	VDDOUT_RF3P3	108	GND
18	BT_UART_TXD	54	GND	109	BT_GPIO_2
19	BT_UART_CTS_N	55	VDDIO	110	BT_GPIO_9
20	GND	56	GND	111	GND
21	GND	57	VBAT_1	112	GND
22	BT_OUT	58	VBAT_2	113	GND
23	GND	59	GND	114	BT_GPIO_11
24	BT_IN	60	WL_REG_ON	115-124	GND
25	GND	61	SDIO_DATA_2	125	LHL_GPIO2
26	BT_DEV_WAKE	62	SDIO_DATA_0	126	LHL_GPIO3
27	BT_HOST_WAKE	63	SDIO_DATA_1	127	LHL_GPIO0
28	BT_CLK_REQ	64	SDIO_CMD	128	RF_SW_CTRL16
29	GND	65	SDIO_CLK	129	RF_SW_CTRL14
30	ANT0	66	SDIO_DATA_3	130	RF_SW_CTRL15
31	GND	67	GND	131	GPIO_12
32	LHL_GPIO1	68	PCIE_RDP	132	GND
33	GPIO_10	69	PCIE_RDN	133	GND
34	GPIO_11	70	GND	134	N.C
35	GPIO_9	71	PCIE_TDP	135-199	GND
36	GND	72	PCIE_TDN		

Downloaded from Arrow.com.

7.2 Pin Descriptions

The following notations shown under Type indicate pin directions, and characteristics, if any.

- **I/O**: Bidirectional
- **I**: Input
- **O**: Output
- **PWR**: Power
- **GND**: Ground
- **OD**: Open-Drain
- **RF**: RF terminal

Table 7 describes Type 2EA pins.

Table 7: Pin Descriptions

No.	Pin name	Type	Connection to IC Pin Name	Description
1	PCIE_PERST_L	I	PCIE_PERST_L	PCIe System Reset. This input is the PCIe reset as defined in the PCIe base specification v1.1.
2	PCIE_CLKREQ_L	OD	PCIE_CLKREQ_L	PCIe clock request signal which indicates when the REFCLK to the PCIe interface can be gated. • **1** = the clock can be gated. • **0** = the clock is required.
3	PCIE_PME_L	OD	PCI_PME_L	PCI power management event output. Used to request a change in the device or system power state. The assertion and de-assertion of this signal is asynchronous to the PCIe reference clock. This signal has an open-drain output structure, as per the PCI Bus Local Bus Specification, revision 2.3.
4	GND			Ground
5	BT_PCM_SYNC	I (I/O)	BT_GPIO_18	Bluetooth General Purpose I/O
6	BT_PCM_IN	I (I/O)	BT_GPIO_17	Bluetooth General Purpose I/O
7	BT_PCM_CLK	I (I/O)	BT_GPIO_19	Bluetooth General Purpose I/O
8	BT_PCM_OUT	O (I/O)	BT_GPIO_16	Bluetooth General Purpose I/O
9	GND			Ground
10	I2S_DI	I (I/O)	I2S_DI	I2S Serial Data Input
11	I2S_MCK	I/O	I2S_MCK	I2S Master Clock
12	I2S_SCK	I/O	I2S_SCK	I2S Bit or Serial Clock
13	I2S_LRCK	I/O	I2S_LRCK	I2S Word Clock or Left/Right Clock
14	I2S_DO	O (I/O)	I2S_DO	I2S Serial Data Output
15	GND			Ground
16	BT_UART_RXD	I	BT_UART_RXD	UART serial input. Serial data input for the HCI UART interface.
17	BT_UART_RTS_N	O	BT_UART_RTS_N	UART request-to-send. Active-low request-to-send signal for the HCI UART interface. BT LED control pin.
18	BT_UART_TXD	O	BT_UART_TXD	UART Serial Output. Serial data output for the HCI UART interface.
19	BT_UART_CTS_N	I	BT_UART_CTS_N	UART clear-to-send. Active-low clear-to-send signal for the HCI UART interface.
20	GND			Ground
21	GND			Ground

Downloaded from Arrow.com.

No.	Pin name	Type	Connection to IC Pin Name	Description
22	BT_OUT	RF		RF Port for Bluetooth.
23	GND			Ground
24	BT_IN	RF		RF port for WLAN/Bluetooth shared antenna.
25	GND			Ground
26	BT_DEV_WAKE	I	BT_DEV_WAKE	Bluetooth DEVICE WAKE
27	BT_HOST_WAKE	O	BT_HOST_WAKE	Bluetooth HOST WAKE
28	BT_CLK_REQ	O	BT_GPIO_20	Bluetooth wants the host to turn on the reference clock. BT_CLK_REQ polarity is active-high.
29	GND			Ground
30	ANT0	RF		RF Port for WLAN (2.4 GHz, 5 GHz, and 6 GHz) and BT.
31	GND			Ground
32	LHL_GPIO1	I/O	LHL_GPIO1	Miscellaneous General Purpose I/O
33	GPIO_10	I/O	GPIO_10	WLAN General Purpose I/O
34	GPIO_11	I/O	GPIO_11	WLAN General Purpose I/O
35	GPIO_9	I/O	GPIO_9	WLAN General Purpose I/O
36	GND			Ground
37	ANT1	RF		RF Port for WLAN (2.4 GHz, 5 GHz, and 6 GHz)
38	GND			Ground
39	GND			Ground
40	GPIO_8	I/O	GPIO_8	WLAN General Purpose I/O
41	GPIO_1_WL_DEV_WAKE	I (I/O)	GPIO_1	WLAN DEVICE WAKE
42	GND			Ground
43	GPIO_0_WL_HOST_WAKE	O (I/O)	GPIO_0	WLAN HOST WAKE
44	GPIO_7	I/O	GPIO_7	WLAN General Purpose I/O
45	BTREG_ON	I	BT_REG_ON	Used by the PMU to power up or power down the internal CYW5557x regulators used by the BT section. When de-asserted, this pin holds the BT section in reset. This pin has an internal 50 kΩ pull-down resistor that is auto enabled/disabled by programming.
46-50	GND			Ground
51	LPO_IN	I	LPO_IN	External Sleep Clock Input (32.768 kHz)
52	GND			Ground
53	VDDOUT_RF3P3	PWR	VDDOUT_RF3P3 VDDIO_RFSW WRF_SYNTH_VDD_V3P3 WRF_PMU_VDD_V3P3_C0 WRF_PMU_VDD_V3P3_C1 Power supply for RF Switches	3.3 V Output to Supply WLAN Radio, RF Switches, PMU
54	GND			Ground

Downloaded from Arrow.com.

No.	Pin name	Type	Connection to IC Pin Name	Description
55	VDDIO	PWR	VDDIO VDDIO_SD PMU_VDD1P8P PMU_VDD1P8A FLL_VDDIO WRF_VDD_V1P8_C0 WRF_VDD_V1P8_C1 BT_VDDO BT_VDDO_SMIF LHL_VDDO	1.8 V IO Supply for WLAN/Bluetooth GPIOs
56	GND			Ground
57	VBAT_1	PWR	CSR_VDDBAT ASR_VDDBAT BTLDO_VDDBAT WLLDO_VDDBAT	Battery Supply Input for CSR Power Stage, ASR Power Stage, BT PA LDO, and WLAN PA/RF LDO.
58	VBAT_2	PWR		
59	GND			Ground
60	WL_REG_ON	I	WL_REG_ON	Used by the PMU to power up or power down the internal CYW5557x regulators used by the WLAN section. When de-asserted, this pin holds the WLAN section in reset. This pin has an internal 50 KΩ pull-down resistor that is auto enabled/disabled by programming.
61	SDIO_DATA_2	I/O	SDIO_DATA_2	SDIO Data Line 2
62	SDIO_DATA_0	I/O	SDIO_DATA_0	SDIO Data Line 0
63	SDIO_DATA_1	I/O	SDIO_DATA_1	SDIO Data Line 1
64	SDIO_CMD	I/O	SDIO_CMD	SDIO Command Line
65	SDIO_CLK	I	SDIO_CLK	SDIO Clock Input
66	SDIO_DATA_3	I/O	SDIO_DATA_3	SDIO Data Line 3
67	GND			Ground
68	PCIE_RDP	I	PCIE_RDP	PCIE Receiver Differential Pair Positive Input
69	PCIE_RDN	I	PCIE_RDN	PCIE Receiver Differential Pair Negative Input
70	GND			Ground
71	PCIE_TDP	O	PCIE_TDP	PCIE Transmitter Differential Pair Positive Output
72	PCIE_TDN	O	PCIE_TDN	PCIE Transmitter Differential Pair Negative Output
73	GND			Ground
74	PCIE_REFCLKP	I	PCIE_REFCLKP	PCIE Differential Pair Clock Source (100 MHz) Positive Input.
75	PCIE_REFCLKN	I	PCIE_REFCLKN	PCIE Differential Pair Clock Source (100 MHz) Negative Input.
76-95	GND			Ground
96	MIC_P	I	MIC_P	ADC Microphone Positive Input
97	MIC_N	I	MIC_N	ADC Microphone Negative Input
98	GND			Ground
99	BT_I2S_DO	O (I/O)	BT_GPIO_12	BT General Purpose I/O
100	BT_I2S_WS	I/O	BT_GPIO_14	BT General Purpose I/O
101	BT_I2S_CLK	I/O	BT_GPIO_15	BT General Purpose I/O
102	BT_I2S_DI	I (I/O)	BT_GPIO_13	BT General Purpose I/O
103	GND			Ground
104	GND			Ground
105	DMIC_DATA	I/O	DMIC_DQ	Digital Mic Data
106	DMIC_CLK	I/O	DMIC_CK	Digital Mic Clock
107	GND			Ground

Downloaded from Arrow.com.

No.	Pin name	Type	Connection to IC Pin Name	Description
108	GND			Ground
109	BT_GPIO_2	I/O	BT_GPIO_2	BT General Purpose I/O
110	BT_GPIO_9	I/O	BT_GPIO_9	BT General Purpose I/O
111	GND			Ground
112	GND			Ground
113	GND			Ground
114	BT_GPIO_11	I/O	BT_GPIO_11	BT General Purpose I/O
115-124	GND			Ground
125	LHL_GPIO2	I/O	LHL_GPIO2	Miscellaneous General Purpose I/O
126	LHL_GPIO3	I/O	LHL_GPIO3	Miscellaneous General Purpose I/O
127	LHL_GPIO0	I/O	LHL_GPIO0	Miscellaneous General Purpose I/O
128	RF_SW_CTRL16	O	RF_SW_CTRL16	Programmable RF switch control lines. The control lines are programmable via the driver and NVRAM file.
129	RF_SW_CTRL14	O	RF_SW_CTRL14	Programmable RF switch control lines. The control lines are programmable via the driver and NVRAM file.
130	RF_SW_CTRL15	O	RF_SW_CTRL15	Programmable RF switch control lines. The control lines are programmable via the driver and NVRAM file.
131	GPIO_12	I/O	GPIO_12	WLAN General Purpose I/O
132	GND			Ground
133	GND			Ground
134	N.C			No Connection
135-199	GND			Ground

Downloaded from Arrow.com.

8 Absolute Maximum Ratings

The absolute maximum ratings are shown in **Table 8.**

Table 8: Absolute Maximum Ratings

Parameter		Minimum	Maximum	Unit
Storage Temperature		-40	+85	^{0}C
Supply Voltage	VBAT	-0.5	6.0	V
	VDDIO	-0.5	2.2	V

Stresses in excess of the absolute ratings may cause permanent damage. Functional operation is not implied under these conditions. Exposure to absolute ratings for extended periods of time may adversely affect reliability. No damage assuming only one parameter is set at limit at a time with all other parameters is set within operating condition.

9 Operating Condition

The operating conditions are shown in **Table 9**.

Table 9: Operating Conditions

Parameter		Minimum	Typical	Maximum	Unit
Operating Temperature		-40	+25	+85	°C
Operating Voltage	VBAT	3.0	3.3	4.8	V
	VDDIO	1.71	1.8	1.89	V
Peak Current	VBAT = 3.3V			1000	mA

Minimum voltage of VBAT is sensitive to get RF performance, so please keep minimum. Voltages level at the input of these module terminals, otherwise RF performance significantly goes worse.

10 External LPO_IN Signal Requirement

External LPO requirements are shown in **Table 10**.

Table 10: External LPO_IN Signal Requirement

Parameter	External LPO_IN Clock	Unit
Nominal input frequency	32.768	kHz
Frequency accuracy	±250	ppm
Duty cycle	30 - 70	%
Input signal amplitude	200–1800	mV, p-p
Signal type	Square-wave or sinewave	
Input impedance[1]	> 100k	Ω
	< 5	pF
Clock jitter (during initial start-up)	< 10,000	ppm

[1] When power is applied or switch off.

Downloaded from Arrow.com.

11 Strapping Options

The pins listed in table below are sampled at power-on reset (POR) to determine the various operating modes. Sampling occurs a few milliseconds after an internal POR or de-assertion of the external POR. After the POR, each pin assumes the GPIO, or alternative function specified in the signal descriptions table. Each strapping option pin has an internal pull-up (PU) or pull-down (PD) resistor that determines the default mode. To change the mode, connect an external PU resistor to VDDIO or a PD resistor to GND, using a 10 kΩ resistor or less.

Table 11 shows the strapping options.

Table 11: Strapping Options

Pin Name	Default Pull During Strapping	
GPIO_1	1	• **1** = PCIE • **0** = SDIO
GPIO_12	1	• **1** = Bluetooth over UART • **0** = Reserved

12 I/O State

The following notations are used in I/O State Table.

- **I**: Input signal
- **O**: Output signal
- **I/O**: Input/Output signal
- **PU** = Pulled up
- **PD** = Pulled down
- **NoPull** = Neither pulled up nor pulled down

Where applicable, the default value is shown in brackets (for example, [default value]).

Table 12 describes the I/O state table.

Table 12: I/O State Table

Name	I/O	Keeper	Active Mode	Low-Power State/Sleep (All Power Present)	Power-down (BT_REG_ON and WL_REG_ON Held Low)	Out-of-Reset: Before SW Download (BT_REG_ON High; WL_REG_ON High)	(WL_REG_ON High and BT_REG_ON = 0) and VDDIOs are Present	Power Rail
WL_REG_ON BT_REG_ON	I	N	I: PD Pull-down auto disabled	I: PD Pull-down auto disabled	I: PD (of 50K)	I: PD (of 50K)	I: PD (of 50K)	

Downloaded from Arrow.com.

Name	I/O	Keeper	Active Mode	Low-Power State/Sleep (All Power Present)	Power-down (BT_REG_ON and WL_REG_ON Held Low)	Out-of-Reset: Before SW Download (BT_REG_ON High; WL_REG_ON High)	(WL_REG_ON High and BT_REG_ON = 0) and VDDIOs are Present	Power Rail
GPIO_0_WL_HOST_WAKE	I/O	Y	I/O: PU, PD, NoPull Programmable [PD]	I/O: PU, PD, NoPull Programmable [PD]	High-Z, NoPull	High-Z, NoPull	High-Z, NoPull	VDDIO
GPIO_1_WL_DEV_WAKE	I/O	Y	I/O: PU, PD, NoPull Programmable [NoPull]	I/O: PU, PD, NoPull Programmable [NoPull]	High-Z, NoPull	High-Z, NoPull	High-Z, NoPull	VDDIO
GPIO_7	I/O	Y	I/O: PU, PD, NoPull Programmable [NoPull]	I/O: PU, PD, NoPull Programmable [NoPull]	High-Z, NoPull	I:NoPull	I:NoPull	VDDIO
GPIO_8	I/O	Y	I/O: PU, PD, NoPull Programmable [NoPull]	I/O: PU, PD, NoPull Programmable [NoPull]	High-Z, NoPull	I:NoPull	I:NoPull	VDDIO
GPIO_9	I/O	Y	I/O: PU, PD, NoPull Programmable [PU]	I/O: PU, PD, NoPull Programmable [PU]	High-Z, NoPull	I:NoPull	I:NoPull	VDDIO
GPIO_10	I/O	Y	I/O: PU, PD, NoPull Programmable [NoPull]	I/O: PU, PD, NoPull Programmable [NoPull]	High-Z, NoPull	I:NoPull	I:NoPull	VDDIO
GPIO_11	I/O	Y	I/O: PU, PD, NoPull Programmable [PU]	I/O: PU, PD, NoPull Programmable [PU]	High-Z, NoPull	I:NoPull	I:NoPull	VDDIO
GPIO_12	I/O	N	I/O: PU, PD, NoPull Programmable [NoPull]	I/O: PU, PD, NoPull Programmable [NoPull]	High-Z, NoPull	High-Z, NoPull	High-Z, NoPull	VDDIO
RF_SW_CTRL_X	O	N	O: NoPull	O: NoPull	High-Z, NoPull	O: NoPull	O: NoPull	VDDOUT_RF3P3
I2S_LRCK	I/O	Y	I/O: PU, PD, NoPull Programmable [NoPull]	I/O: PU, PD, NoPull Programmable [NoPull]	High-Z, No Pull	I: PD	I: PD	VDDIO
I2S_SCK	I/O	Y	I/O: PU, PD, NoPull Programmable [NoPull]	I/O: PU, PD, NoPull Programmable [NoPull]	High-Z, No Pull	I: PD	I: PD	VDDIO
I2S_MCK	I/O	Y	I/O: PU, PD, NoPull Programmable [NoPull]	I/O: PU, PD, NoPull Programmable [NoPull]	High-Z, No Pull	I: PD	I: PD	VDDIO
I2S_DI	I/O	Y	I/O: PU, PD, NoPull Programmable [NoPull]	I/O: PU, PD, NoPull Programmable [NoPull]	High-Z, No Pull	I: PD	I: PD	VDDIO

Downloaded from Arrow.com.

Name	I/O	Keeper	Active Mode	Low-Power State/Sleep (All Power Present)	Power-down (BT_REG_ON and WL_REG_ON Held Low)	Out-of-Reset: Before SW Download (BT_REG_ON High; WL_REG_ON High)	(WL_REG_ON High and BT_REG_ON = 0) and VDDIOs are Present	Power Rail
I2S_DO	I/O	Y	I/O: PU, PD, NoPull Programmable [NoPull]	I/O: PU, PD, NoPull Programmable [NoPull]	High-Z, No Pull	I: PD	I: PD	VDDIO
BT_GPIO_2	I/O	Y	I/O: PU, PD, NoPull Programmable [NoPull]	I/O: PU, PD, NoPull Programmable [NoPull]	High-Z, No Pull	I: PD	I: PD	VDDIO
BT_GPIO_9	I/O	Y	I/O: PU, PD, NoPull Programmable [NoPull]	I/O: PU, PD, NoPull Programmable [NoPull]	High-Z, No Pull	I: PD	I: PD	VDDIO
BT_GPIO_11	I/O	Y	I/O: PU, PD, NoPull Programmable [NoPull]	I/O: PU, PD, NoPull Programmable [NoPull]	High-Z, No Pull	I: PD	I: PD	VDDIO
BT_I2S_DO BT_GPIO_12	I/O	Y	I/O: PU, PD, NoPull Programmable [NoPull]	I/O: PU, PD, NoPull Programmable [NoPull]	High-Z, No Pull	I: PD	I: PD	VDDIO
BT_I2S_DI BT_GPIO_13	I/O	Y	I/O: PU, PD, NoPull Programmable [NoPull]	I/O: PU, PD, NoPull Programmable [NoPull]	High-Z, No Pull	I: PD	I: PD	VDDIO
BT_I2S_WS BT_GPIO_14	I/O	Y	I/O: PU, PD, NoPull Programmable [NoPull]	I/O: PU, PD, NoPull Programmable [NoPull]	High-Z, No Pull	I: PD	I: PD	VDDIO
BT_I2S_CLK BT_GPIO_15	I/O	Y	I/O: PU, PD, NoPull Programmable [NoPull]	I/O: PU, PD, NoPull Programmable [NoPull]	High-Z, No Pull	I: PD	I: PD	VDDIO
BT_PCM_OUT BT_GPIO_16	I/O	Y	I/O: PU, PD, NoPull Programmable [NoPull]	I/O: PU, PD, NoPull Programmable [NoPull]	High-Z, No Pull	I: PD	I: PD	VDDIO
BT_PCM_IN BT_GPIO_17	I/O	Y	I/O: PU, PD, NoPull Programmable [NoPull]	I/O: PU, PD, NoPull Programmable [NoPull]	High-Z, No Pull	I: PD	I: PD	VDDIO
BT_PCM_SYNC BT_GPIO_18	I/O	Y	I/O: PU, PD, NoPull Programmable [NoPull]	I/O: PU, PD, NoPull Programmable [NoPull]	High-Z, No Pull	I: PD	I: PD	VDDIO

Downloaded from Arrow.com.

Name	I/O	Keeper	Active Mode	Low-Power State/Sleep (All Power Present)	Power-down (BT_REG_ON and WL_REG_ON Held Low)	Out-of-Reset: Before SW Download (BT_REG_ON High; WL_REG_ON High)	(WL_REG_ON High and BT_REG_ON = 0) and VDDIOs are Present	Power Rail
BT_PCM_CLK BT_GPIO_19	I/O	Y	I/O: PU, PD, NoPull Programmable [NoPull]	I/O: PU, PD, NoPull Programmable [NoPull]	High-Z, No Pull	I: PD	I: PD	VDDIO
BT_CLK_REQ BT_GPIO_20	I/O	Y	I/O: PU, PD, NoPull Programmable [NoPull]	I/O: PU, PD, NoPull Programmable [NoPull]	I: PD	O: No Pull	O: No Pull	VDDIO
BT_DEV_WAKE	I/O	Y	I/O: PU, PD, NoPull Programmable [NoPull]	I/O: PU, PD, NoPull Programmable [NoPull]	High-Z, No Pull	I: PD	I: PD	VDDIO
BT_HOST_WAKE	I/O	Y	I/O: PU, PD, NoPull Programmable [NoPull]	I/O: PU, PD, NoPull Programmable [NoPull]	High-Z, No Pull	I: PD	I: PD	VDDIO
LHL_GPIO0	I/O	Y	I/O: PU, PD, NoPull Programmable [NoPull]	I/O: PU, PD, NoPull Programmable [NoPull]	High-Z, No Pull	I: No Pull	I: No Pull	VDDIO
LHL_GPIO1	I/O	Y	I/O: PU, PD, NoPull Programmable [NoPull]	I/O: PU, PD, NoPull Programmable [NoPull]	High-Z, No Pull	I: No Pull	I: No Pull	VDDIO
LHL_GPIO2	I/O	Y	I/O: PU, PD, NoPull Programmable [NoPull]	I/O: PU, PD, NoPull Programmable [NoPull]	High-Z, No Pull	I: No Pull	I: No Pull	VDDIO
LHL_GPIO3	I/O	Y	I/O: PU, PD, NoPull Programmable [NoPull]	I/O: PU, PD, NoPull Programmable [NoPull]	High-Z, No Pull	I: No Pull	I: No Pull	VDDIO

13 Power-On Sequence

This section describes the power sequences along with their parameters.

- VBAT and VDDIO should not rise 10%-90% faster than 40 microseconds.
- VBAT should be up before or at the same time as VDDIO. VDDIO should NOT be present fast or be held high before VBAT is high.
- WLREG_ON and BTREG_ON should be up after sleep clock oscillation is stabilized.
- Please proceed reset by WLREG_ON and BTREG_ON until it starts normally if it doesn't wake from sleep property, or it is presented with uncertain status.

Downloaded from Arrow.com.

- CYW55573 has an internal power-on reset (POR) circuit. The device will be held in reset for a maximum of 110 ms after internal regulators and VDDIO have both passed the POR threshold. Wait at least 51.5 ms after internal regulators and VDDIO are available before initiating PCIe accesses.

13.1 Power-On Sequence for WLAN ON and BT ON

Figure 6 shows the power-on sequence diagram for WLAN ON and BT ON.

Figure 6: Power-On Sequence - WLAN ON and BT ON

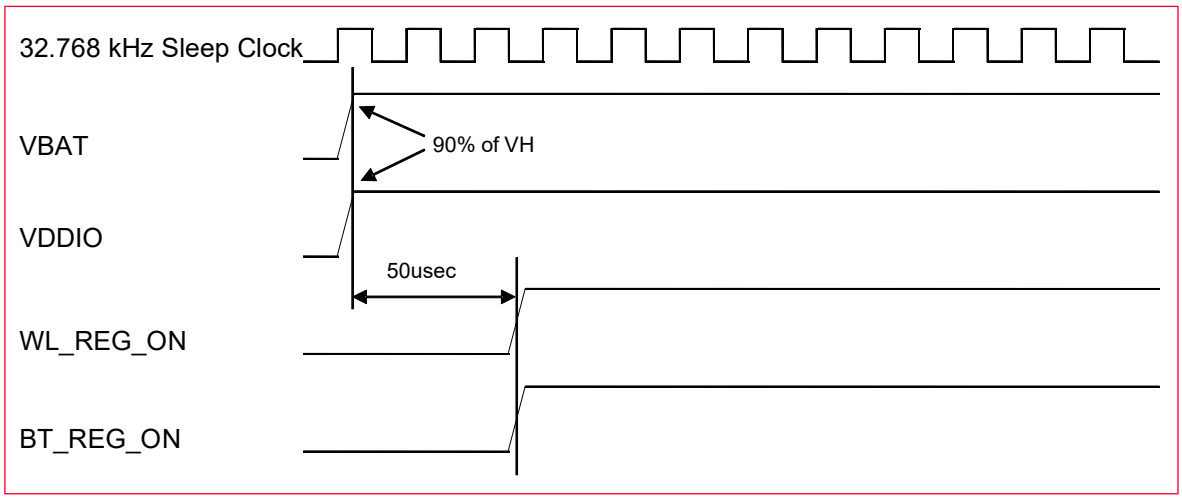

13.2 Power-On Sequence for WLAN OFF and BT OFF

Figure 7 shows the power-on sequence diagram for WLAN OFF and BT OFF.

Figure 7: Power-On Sequence - WLAN OFF and BT OFF

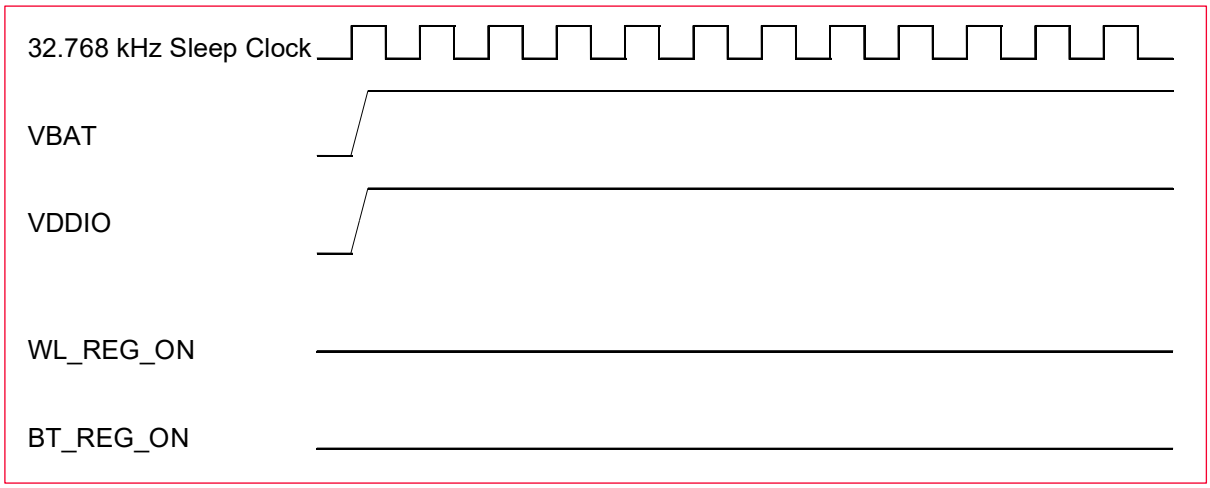

Downloaded from Arrow.com.

13.3 Power-On Sequence for WLAN ON and BT OFF

Figure 8 shows the power-on sequence diagram for WLAN ON and BT OFF.

Figure 8: Power-On Sequence - WLAN ON and BT OFF

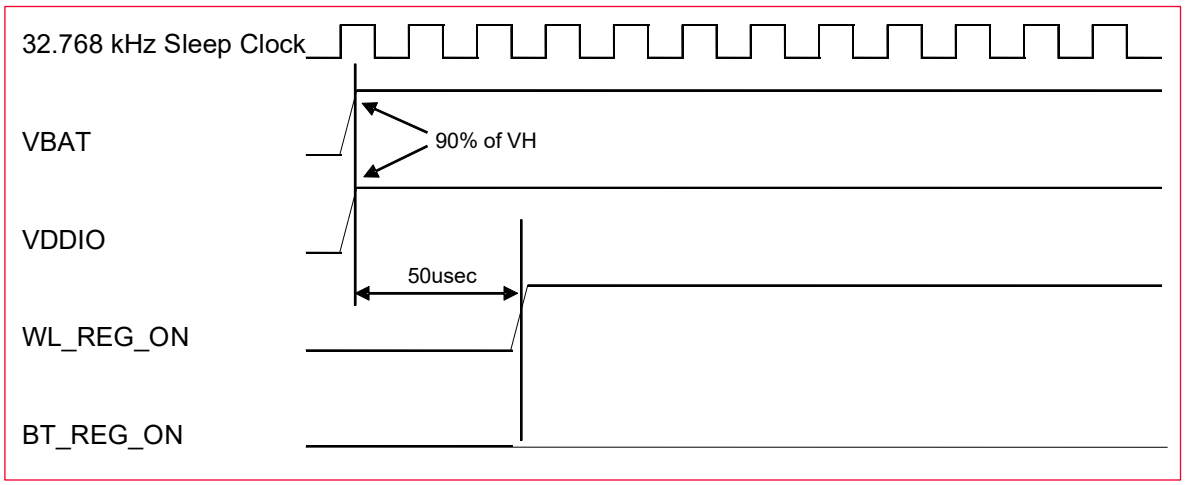

13.4 Power-On Sequence for WLAN OFF and BT ON

Figure 9 shows the power-on sequence diagram for WLAN OFF and BT ON.

Figure 9: Power-On Sequence - WLAN OFF and BT ON

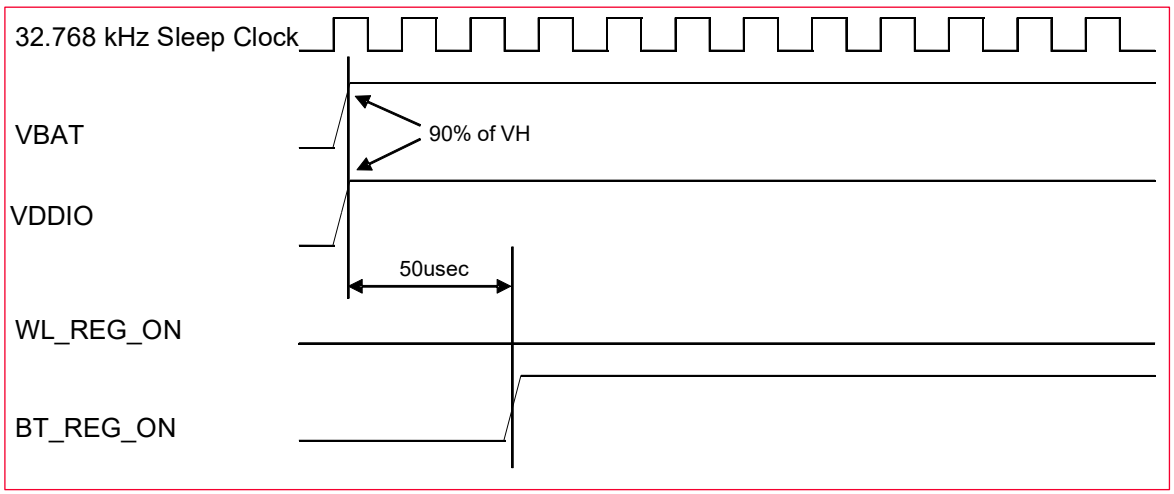

Downloaded from Arrow.com.

14 Digital I/O Requirement

The requirements are described in **Table 13**.

Table 13: Digital I/O Requirements

Digital I/O Pins	System	Minimum	Typical	Maximum	Unit
PCIe Out-of-Band Signals (PCIE_PERST_L, PCIE_PME_L, and PCIE_CLKREQ_L) For VDDIO = 1.8 V:					
Input high voltage	VIH	0.65×VDDIO	-	-	V
Input low voltage	VIL	-	-	0.35×VDDIO	V
Output high voltage@2mA	VOH	VDDIO-0.4	-	-	V
Output low voltage@2mA	VOL	-	-	0.45	V

VOH specification is not applicable for PCIE_PME_L and PCIE_CLKREQ_L signals as they are open-drain outputs.

15 Interface Timing and AC Characteristics

This section describes the Bluetooth UART timing and Bluetooth PCM interface timing data formatting and wideband speech support (at different modes) and their parameters.

15.1 Bluetooth UART Timing

Figure 10 shows the Bluetooth UART timing signals.

Figure 10: Bluetooth UART Timing Signal

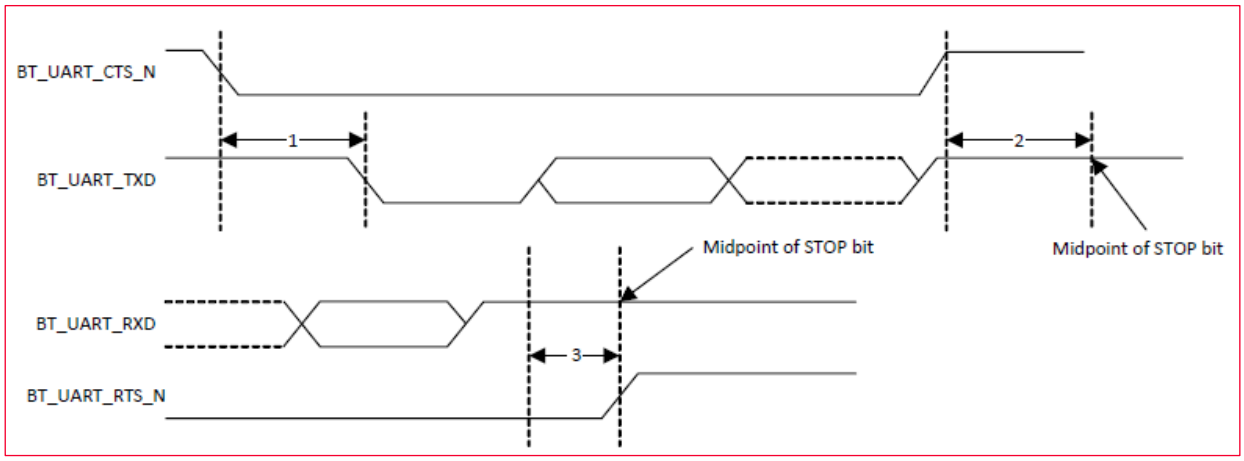

Table 14 shows the Bluetooth UART timing signal parameters.

Table 14: Bluetooth UART Timing Signal Parameters

Reference	Description	Minimum	Typical	Maximum	Unit
1	Delay time, BT_UART_CTS_N low to BT_UART_TXD valid.			1.5	Bit periods

Downloaded from Arrow.com.

Reference	Description	Minimum	Typical	Maximum	Unit
2	Setup time, BT_UART_CTS_N high before midpoint of stop bit.			0.5	Bit periods
3	Delay time, midpoint of stop bit to BT_UART_RTS_N high.			0.5	Bit periods

15.2 Bluetooth PCM Interface Timing

This section describes the Bluetooth PCM Interface Timing and its data formatting and widespread speed support that includes short frame sync and long frame sync at master and slave modes.

15.2.1 Data Formatting

The IC used in the module may be configured to generate and accept several different data formats. For conventional narrowband speech mode, the IC uses 13 of the 16 bits in each PCM frame. The location and order of these 13 bits can be configured to support various data formats on PCM interface. The remaining three bits are ignored on the input and may be filled with 0s, 1s, a sigh bit, or a programmed value on the output. The default format is 13bit 2's complement data, left justified, and clocked MSB first.

15.2.2 Wideband Speech Support

When the host encodes wideband speech (WBS) packets in transparent mode, the encoded packets are transferred over the PCM bus for an eSCO voice connection. In this mode, the PCM bus is typically configured in master mode for a 4 KHz sync rate with 16-bit samples, resulting in a 64-kbps bit rate. The IC also supports slave transparent mode using a proprietary rate-matching scheme. IN SBC-code mode, linear 16-bit data at 16 KHz (256 kbps rate) is transferred over the PCM bus.

15.2.3 Short Frame Sync - Master Mode

Figure 11 shows the short frame sync signal in master mode.

Figure 11: Short Frame Sync Signal - Master Mode

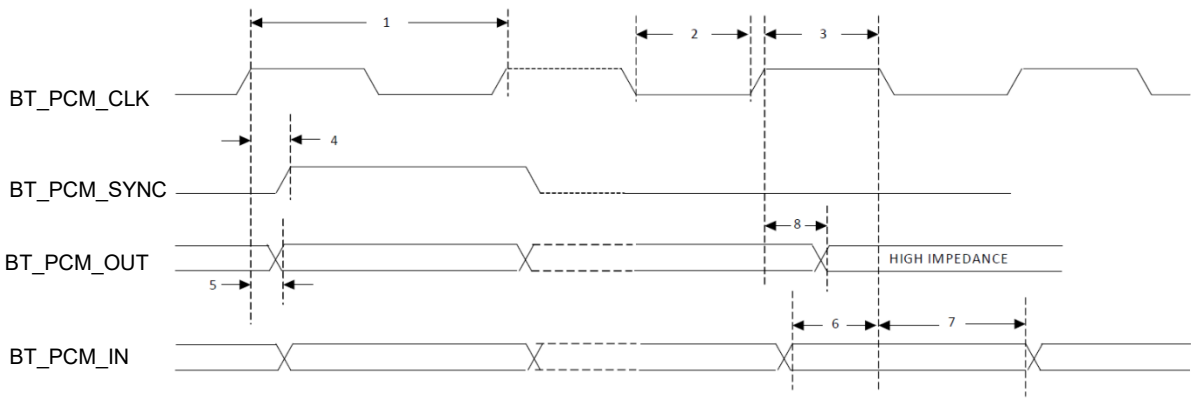

Table 15 describes the short frame sync signal parameters in master mode.

Downloaded from Arrow.com.

Table 15: Short Frame Sync Signal Parameters - Master Mode

Reference	Description	Minimum	Typical	Maximum	Unit
1	PCM bit clock frequency			12.0	MHz
2	PCM bit clock High	41.0			ns
3	PCM bit clock Low	41.0			ns
4	PCM_SYNC delay	0		25.0	ns
5	PCM_OUT delay	0		25.0	ns
6	PCM_IN setup	8			ns
7	PCM_IN hold	8			ns
8	Delay from rising edge of BT_PCM_CLK during last bit period to BT_PCM_OUT becoming high impedance.	0		25.0	ns

Downloaded from Arrow.com.

15.2.4 Short Frame Sync - Slave Mode

Figure 12 shows the short frame sync signal in slave mode.

Figure 12: Short Frame Sync Signal - Slave Mode

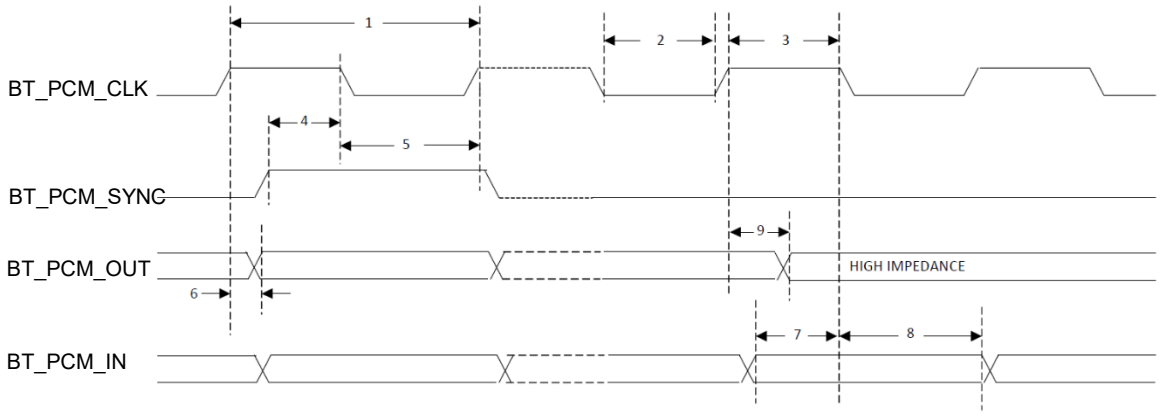

Table 16 describes the short frame sync signal parameters in slave mode.

Table 16: Short Frame Sync Signal Parameters - Slave Mode

Reference	Description	Minimum	Typical	Maximum	Unit
1	PCM bit clock frequency			12.0	MHz
2	PCM bit clock High	41.0			ns
3	PCM bit clock Low	41.0			ns
4	PCM_SYNC setup	8.0			ns
5	PCM_SYNC hold	8.0			ns
6	PCM_OUT delay	0		25.0	ns
7	PCM_IN setup	8.0			ns
8	PCM_IN hold	8.0			ns
9	Delay from rising edge of BT_PCM_CLK during last bit period to BT_PCM_OUT becoming high impedance.	0	-	25.0	ns

15.2.5 Long Frame Sync - Master Mode

Figure 13 shows the long frame sync signal in master mode.

Figure 13: Long Frame Sync Signal - Master Mode

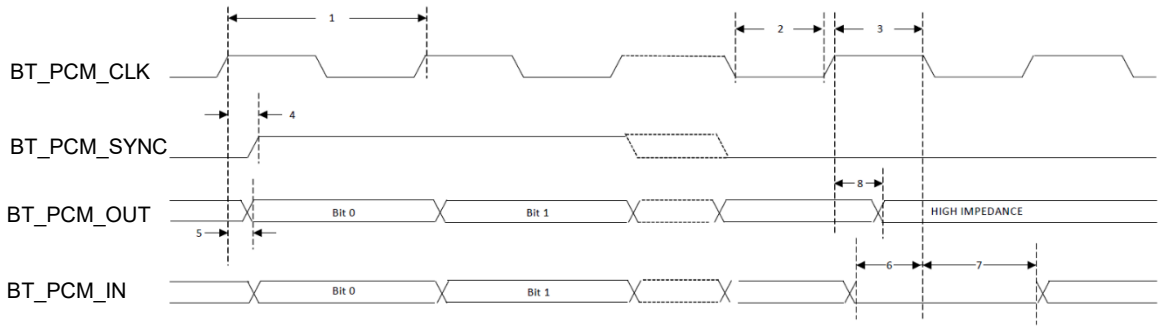

Downloaded from Arrow.com.

Table 17 describes the long frame sync signal parameters in master mode.

Table 17: Long Frame Sync Signal Parameters - Master Mode

Reference	Description	Minimum	Typical	Maximum	Unit
1	PCM bit clock frequency			12.0	MHz
2	PCM bit clock High	41.0			ns
3	PCM bit clock Low	41.0			ns
4	PCM_SYNC delay	0		25.0	ns
5	PCM_OUT delay	0		25.0	ns
6	PCM_IN setup	8.0			ns
7	PCM_IN hold	8.0			ns
8	Delay from rising edge of BT_PCM_CLK during last bit period to BT_PCM_OUT becoming high impedance	0		25.0	ns

15.2.6 Long Frame Sync - Slave Mode

Figure 14 shows the long frame sync signal in slave mode.

Figure 14: Long Frame Sync Signal - Slave Mode

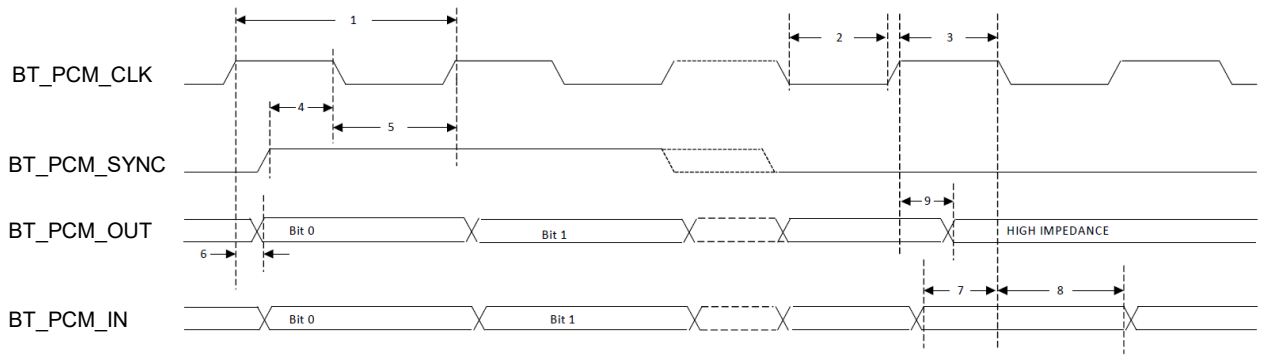

Table 18 describes the long frame sync signal parameters in slave mode.

Table 18: Long Frame Sync Signal Parameters - Slave Mode

Reference	Description	Minimum	Typical	Maximum	Unit
1	PCM bit clock frequency			12.0	MHz
2	PCM bit clock High	41.0			ns
3	PCM bit clock Low	41.0			ns
4	PCM_SYNC setup	8.0			ns
5	PCM_SYNC hold	8.0			ns
6	PCM_OUT delay	0		25.0	ns
7	PCM_IN setup	8.0			ns
8	PCM_IN hold	8.0			ns
9	Delay from rising edge of BT_PCM_CLK during last bit period to BT_PCM_OUT becoming high impedance.	0		25.0	ns

Downloaded from Arrow.com.

15.3 Bluetooth I²S Interface Timing

The IC used in the module supports I²S format.

The I²S signals are:

- I²S clock: BT_I2S_CLK
- I²S Word Select: BT_I2S_WS
- I²S Data Out: BT_I2S_DO
- I²S Data In: BT_I2S_DI

BT_I2S_CLK and BT_I2S_WS become outputs in Master mode and inputs in Slave mode, whereas BT_I2S_DO always stays as an output. The channel word length is 16 bits, and the data is justified so that the MSB of the left-channel data is aligned with the MSB of the I_2S bus, in accord with the I2S specification. The MSB of each data word is transmitted one bit clock cycle after the BT_I2S_WS transition, synchronous with the falling edge of the bit clock. Left-channel data is transmitted when BT_I2S_WS is LOW, and right channel data is transmitted when BT_I2S_WS is HIGH. Data bits sent by CYW5557x are synchronized with the falling edge of BT_ I2S_CLK and should be sampled by the receiver on the rising edge of BT_I2S_CLK.

Table 19 describes the timing for I2S transmitters and receivers.

Table 19: Timing for I²S Transmitters and Receivers

	Transmitter				Receiver				Notes
	Lower Limit		Upper Limit		Lower Limit		Upper Limit		
	Minimum	Maximum	Minimum	Maximum	Minimum	Maximum	Minimum	Maximum	
Clock Period T	T_{tr}				T_r				a
Master Mode: Clock generated by transmitter or receiver									
HIGH t_{HC}	$0.35T_{tr}$				$0.35T_{tr}$				b
LOW t_{LC}	$0.35T_{tr}$				$0.35T_{tr}$				b
Slave Mode: Clock accepted by transmitter or receiver									
HIGH t_{HC}		$0.35T_{tr}$				$0.35T_{tr}$			c
LOW t_{LC}		$0.35T_{tr}$				$0.35T_{tr}$			c
Rise Time t_{RC}			$0.15T_{tr}$						d
Transmitter									
Delay t_{dtr}				0.8T					e
Hold time t_{htr}	0								d
Receiver									
Setup time t_{sr}					$0.2T_r$				f

Downloaded from Arrow.com.

	Transmitter				Receiver				Notes
	Lower Limit		Upper Limit		Lower Limit		Upper Limit		
	Minimum	Maximum	Minimum	Maximum	Minimum	Maximum	Minimum	Maximum	
Hold time t_{hr}					$0.2T_r$				f

The notes column is described below:

a) The system clock period T must be greater than T_{tr} and T_r because both the transmitter and receiver have to be able to handle the data transfer rate.

b) At all data rates in master mode, the transmitter or receiver generates a clock signal with a fixed mark/space ratio. For this reason, t_{HC} and t_{LC} specified with respect to T.

c) In slave mode, the transmitter and receiver need a clock signal with minimum HIGH and LOW periods so that they can detect the signal. So long as the minimum periods are greater than $0.35T_{tr}$ any clock that meets the requirements can be used.

d) Because the delay(t_{dtr}) and the maximum transmitter speed (defined by T_{tr}) are related, a fast transmitter driven by a slow clock edge can result in t_{dtr} not exceeding t_{RC} which means t_{htr} becomes zero or negative. Therefore, the transmitter has guarantee that t_{htr} is greater than or equal to zero, so long as the clock rise-time t_{RC} is not more than t_{RC} where t_{RCmax} is not less than $0.15T_{tr}$.

e) To allow data to be clocked out on a falling edge, the delay is specified with respect to the rising edge of the clock signal and T, always giving the receiver sufficient setup time.

f) The data setup and hold time must not be less than the specified receiver setup and hold time.

The time periods specified in the figures below are defined by the transmitter speed. The receiver specifications must match transmitter performance.

Figure 15 shows the I²S transmitter timing signals.

Figure 15: I²S Transmitter Timing Signal

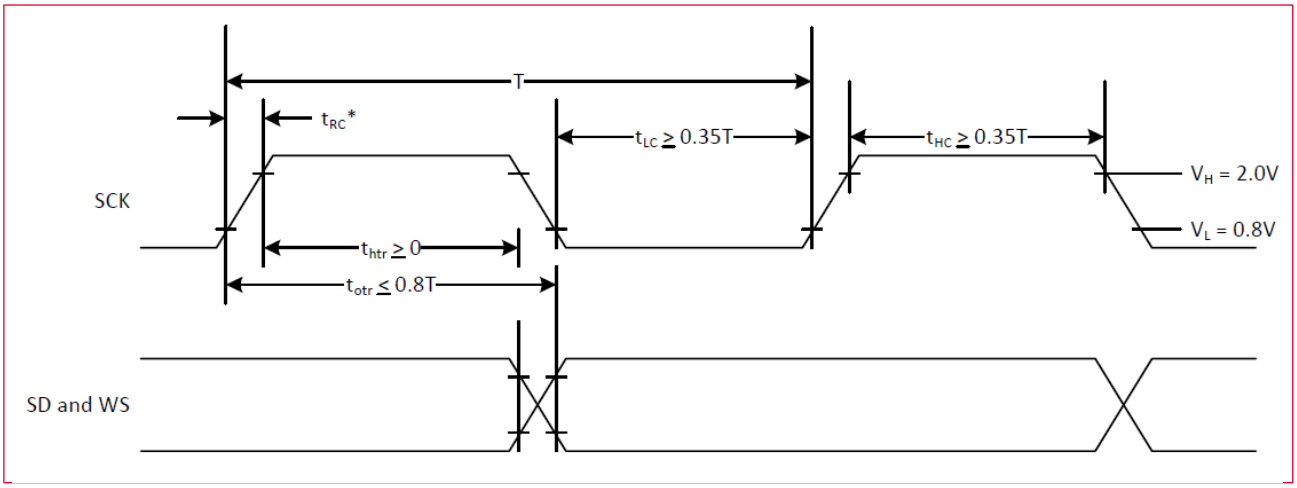

Downloaded from Arrow.com.

- T = Clock period
- Ttr = Minimum allowed clock period for transmitter
- T = Ttr
- tRC is only relevant for transmitters in slave mode

Figure 16 shows the I²S receiver timing signals.

Figure 16: I²S Receiver Timing Signal

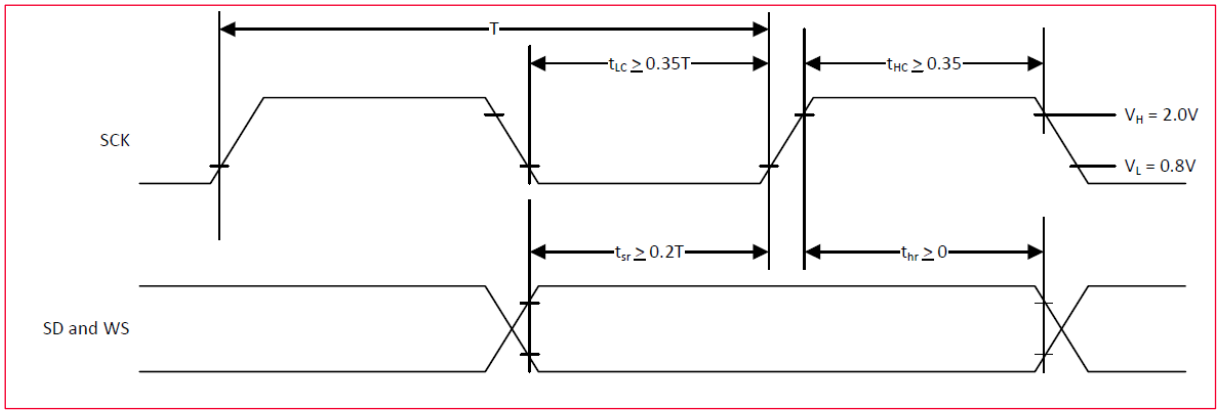

- T = Clock period
- Tr = Minimum allowed clock period for transmitter
- T > Tr

15.4 WLAN SDIO Timing

15.4.1 SDIO Default Mode Timing

Figure 17 and **Table 20** show the SDIO protocol timing diagram and its parameters in default speed mode.

Figure 17: SDIO Protocol Timing Diagram - Default Mode

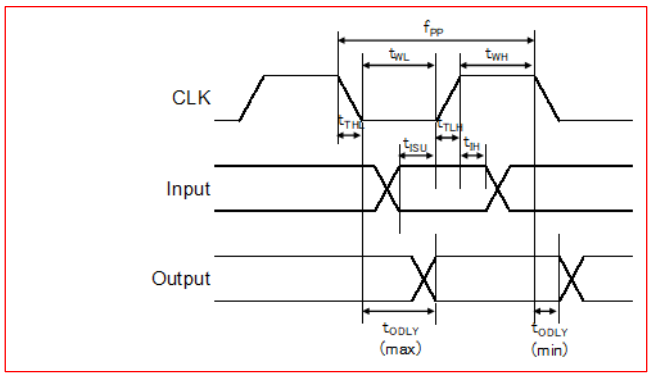

Downloaded from Arrow.com.

Table 20: SDIO Protocol Timing Parameters - Default Mode

Parameter	Symbol	Minimum	Typical	Maximum	Unit
SDIO CLK (All values are referred to minimum VIH and maximum VIL					
Frequency-Data Transfer Mode	f_{PP}	0		25	MHz
Frequency-Identification Mode	f_{OD}	0		400	kHz
Clock Low Time	t_{WL}	10			ns
Clock High Time	t_{WH}	10			ns
Clock Rise Time	t_{TLH}			10	ns
Clock low Time	t_{THL}			10	ns
Inputs: CMD, DAT (referenced to CLK)					
Input Setup Time	t_{ISU}	5.0			ns
Input Hold Time	t_{IH}	5.0			ns
Outputs: CMD, DAT (referenced to CLK)					
Output Delay Time-Data Transfer Mode	t_{ODLY}	0		14	ns
Output Delay Time-Identification Mode	t_{ODLY}	0		50	ns

- Timing is based on CL < 40pF load on CMD and Data.
- Minimum (Vih) = 0.7*VIO and maximum (Vil) = 0.2*VIO.

15.4.2 SDIO High-Speed Mode Timing

Figure 18 and **Table 21** show SDIO protocol timing diagram and its parameters in high-speed mode.

Figure 18: SDIO Protocol Timing Diagram - High-Speed Mode

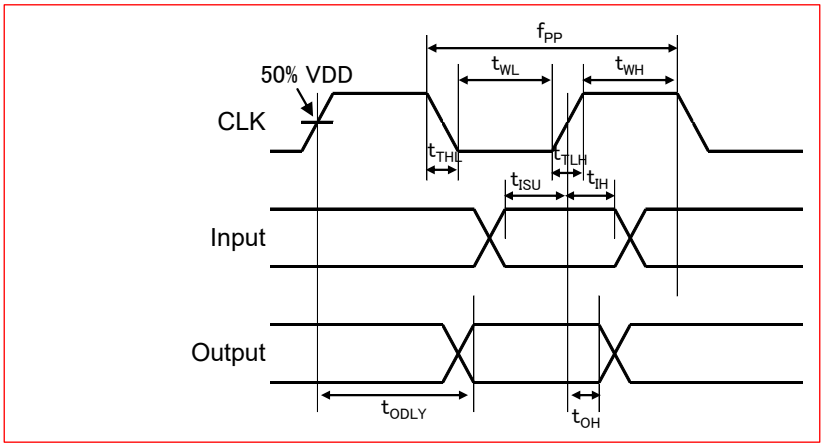

Table 21: SDIO Protocol Timing Parameters - High-Speed Mode

Parameter	Symbol	Minimum	Typical	Maximum	Unit
SDIO CLK (All values are referred to minimum VIH and maximum VIL					
Frequency-Data Transfer Mode	f_{PP}	0		50	MHz
Frequency-Identification Mode	f_{OD}	0		400	kHz
Clock Low Time	t_{WL}	7.0			ns

Downloaded from Arrow.com.

Parameter	Symbol	Minimum	Typical	Maximum	Unit
Clock High Time	t_{WH}	7.0			ns
Clock Rise Time	t_{TLH}			3.0	ns
Clock low Time	t_{THL}			3.0	ns
Inputs: CMD, DAT (referenced to CLK)					
Input Setup Time	t_{ISU}	6			ns
Input Hold Time	t_{IH}	2			ns
Outputs: CMD, DAT (referenced to CLK)					
Output Delay Time-Data Transfer Mode	t_{ODLY}			14	ns
Output Hold Time	t_{OH}	2.5			ns
Total System Capacitance (each line)	CL			40	pF

- Timing is based on CL < 40pF load on CMD and Data.
- Minimum (Vih) = 0.7*VIO and maximum (Vil) = 0.2*VIO

15.4.3 SDIO Bus Timing Specifications in SDR Modes

15.4.3.1 Clock Timing

Figure 19 and **Table 22** show SDIO bus clock timing diagram and its parameters in SDR modes.

Figure 19: SDIO Clock Timing Diagram - SDR Mode

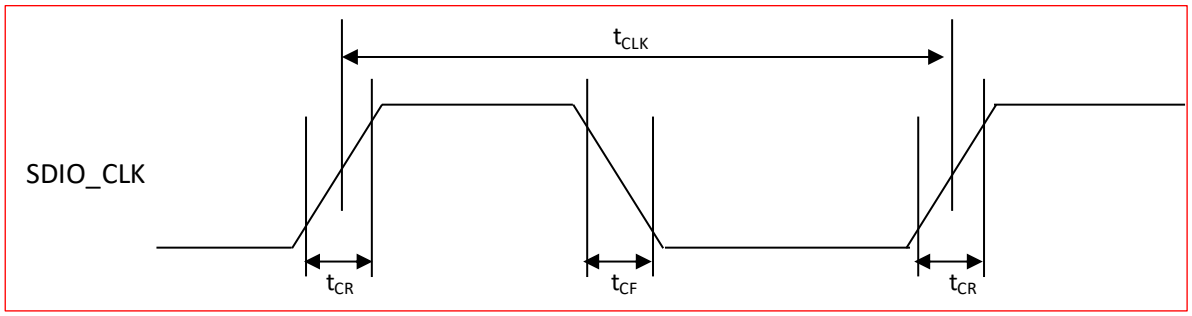

Table 22: SDIO Clock Timing Parameters - SDR Mode

Parameter	Symbol	Minimum	Maximum	Unit	Comments
	t_{CLK}	40		ns	SDR12 mode
		20		ns	SDR25 mode
		10		ns	SDR50 mode
		4.8		ns	SDR104 mode
	t_{CR}, t_{CF}		0.2 x t_{CLK}	ns	t_{CR}, t_{CF} < 2.00ns (maximum) @100MHz, c_{CARD} = 10pF
					t_{CR}, t_{CF} < 0.96ns (maximum) @ 208MHz, c_{CARD} = 10pF
Clock duty		30	70	%	-

Downloaded from Arrow.com.

15.4.3.2 Device Input Timing

Figure 20 and **Table 23** show SDIO bus input timing diagram and its parameters in SDR modes.

Figure 20: SDIO Bus Input Timing Diagram - SDR Mode

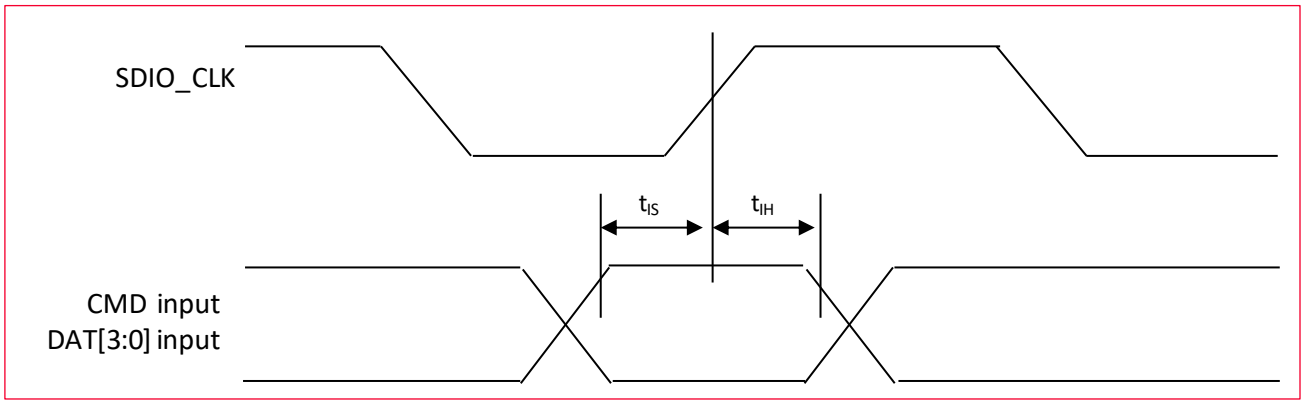

Table 23: SDIO Bus Input Timing Parameters - SDR Mode

Symbol	Minimum	Maximum	Unit	Comments
SDR104 Mode				
t_{IS}	1.4		ns	c_{CARD} = 10pF, VCT = 0.975V
t_{IH}	0.8		ns	c_{CARD} = 5pF, VCT = 0.975V
SDR50 Mode				
t_{IS}	3.0		ns	c_{CARD} = 10pF, VCT = 0.975V
t_{IH}	0.8		ns	c_{CARD} = 5pF, VCT = 0.975V

15.4.3.3 Device Output Timing

Figure 21 and **Table 24** show SDIO bus output timing diagram and its parameters in SDR modes up to 100 MHz.

Figure 21: SDIO Bus Output Timing Diagram - SDR Modes Up To 100 MHz

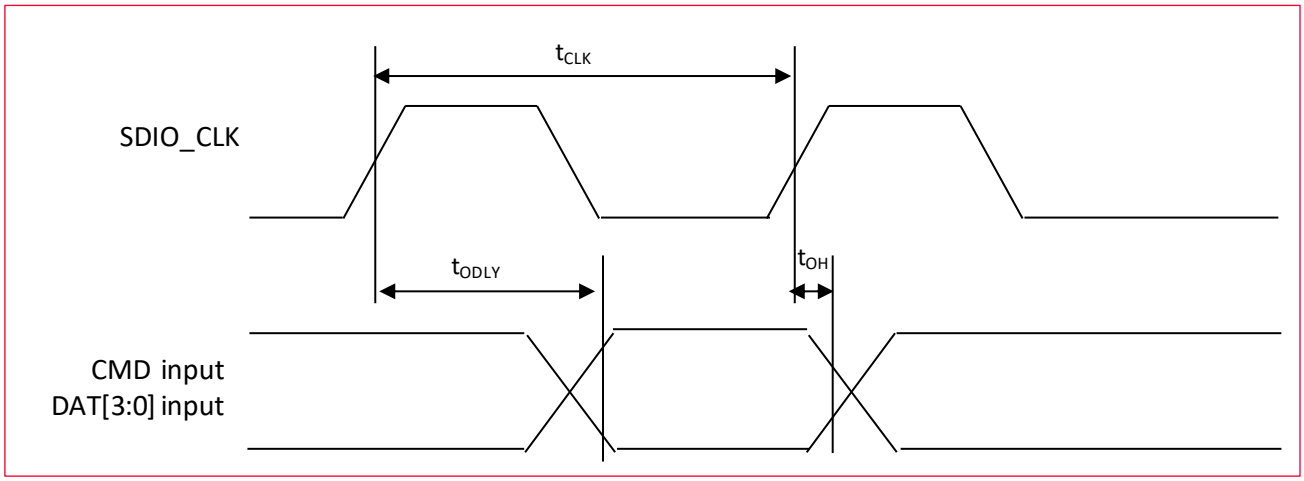

Downloaded from Arrow.com.

Table 24: SDIO Bus Output Timing Parameters - SDR Modes Up To 100 MHz

Symbol	Minium	Maximum	Unit	Comments
t_{ODLY}		7.5	ns	$t_{CLK} \geqq$ 10ns CL = 30pF using driver type B for SDR50
t_{ODLY}		14.0	ns	$t_{CLK} \geqq$ 20ns CL = 40pF using for SDR12, SDR25
t_{OH}	1.5		ns	Hold time at the t_{ODLY} (minimum) CL = 15pF

Figure 22 and **Table 25** show SDIO bus output timing diagram and its parameters in SDR modes 100 MHz to 208 MHz.

Figure 22: SDIO Bus Output Timing Diagram - SDR Modes 100 MHz to 208 MHz

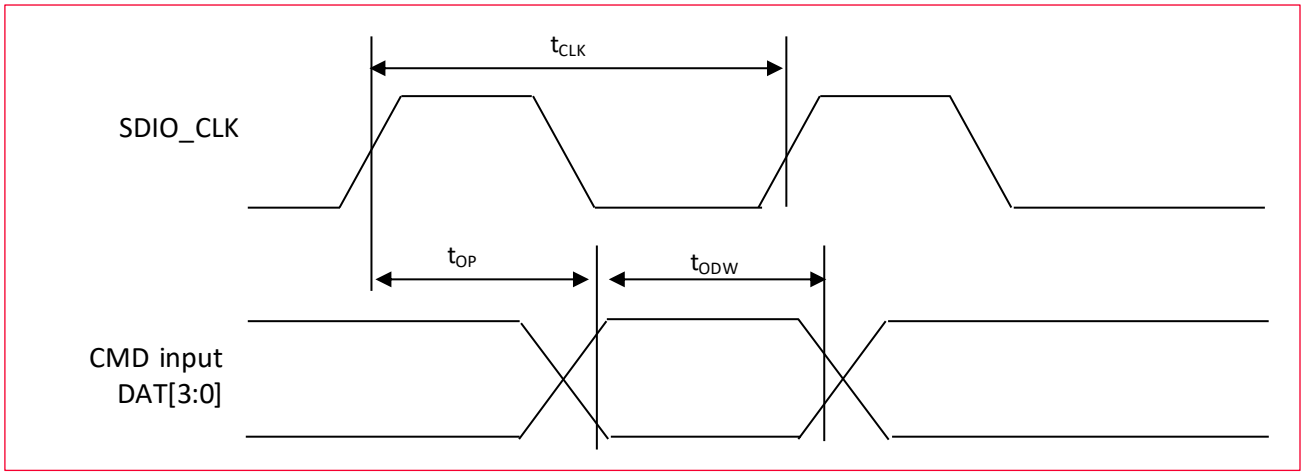

Table 25: SDIO Bus Output Timing Parameters - SDR Modes 100 MHz to 208 MHz

Symbol	Minimum	Maximum	Unit	Comments
t_{OP}	0	2	UI	Card output phase
Δt_{OP}	-350	+1550	ps	Delay variation due to temp change after tuning
t_{ODW}	0.60		UI	t_{ODW} = 2.88ns @ 208Hz

Figure 23 shows Δtop consideration for variable data window with SDR 104 Mode.

Figure 23: Δtop Consideration for Variable Data Window - SDR 104 Mode

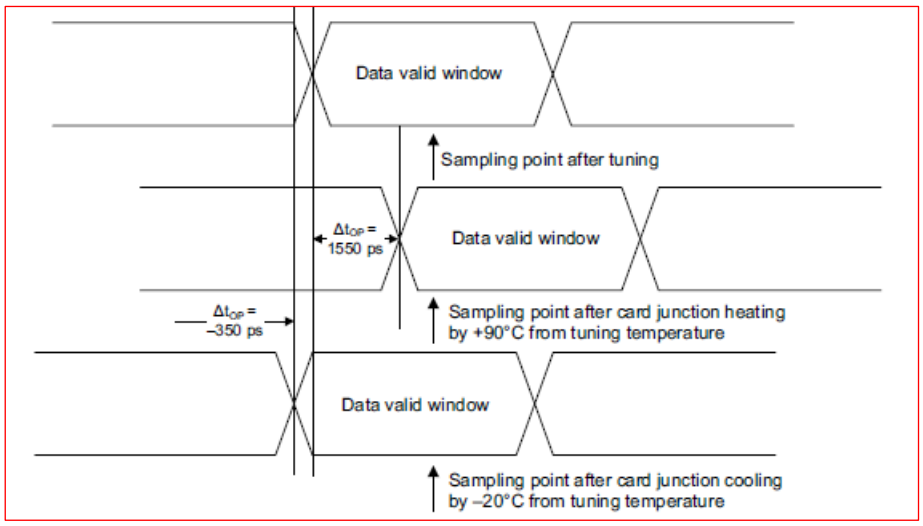

Downloaded from Arrow.com.

15.4.4 SDIO Bus Timing Specifications in DDR50 Mode

Figure 24 and **Table 26** show SDIO clock timing diagram and its parameters in DDR50 mode.

Figure 24: SDIO Clock Timing Diagram - DDR50 Mode

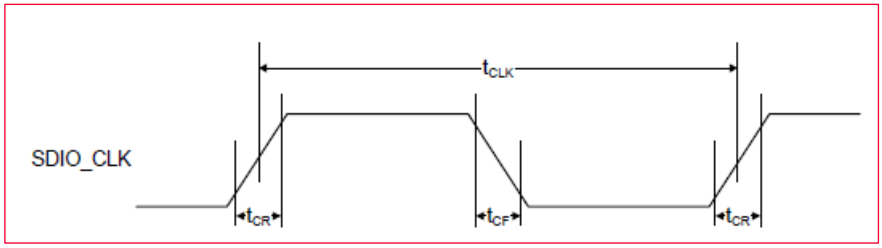

Table 26: SDIO Clock Timing Parameters - DDR50 Mode

Parameter	Symbol	Minimum	Maximum	Unit	Comments
	t_{CLK}	20		ns	DDr50 mode
	t_{CR}, t_{CF}		0.2 x t_{CLK}	ns	t_{CR}, t_{CF} < 4.00ns (maximum) @ 50 MHz, c_{Card} = 10pF
Clock duty cycle		45	55	%	

Figure 25 and **Table 27** show SDIO data timing diagram and its parameters in DDR50 mode.

Figure 25: SDIO Data Timing Diagram - DDR 50 Mode

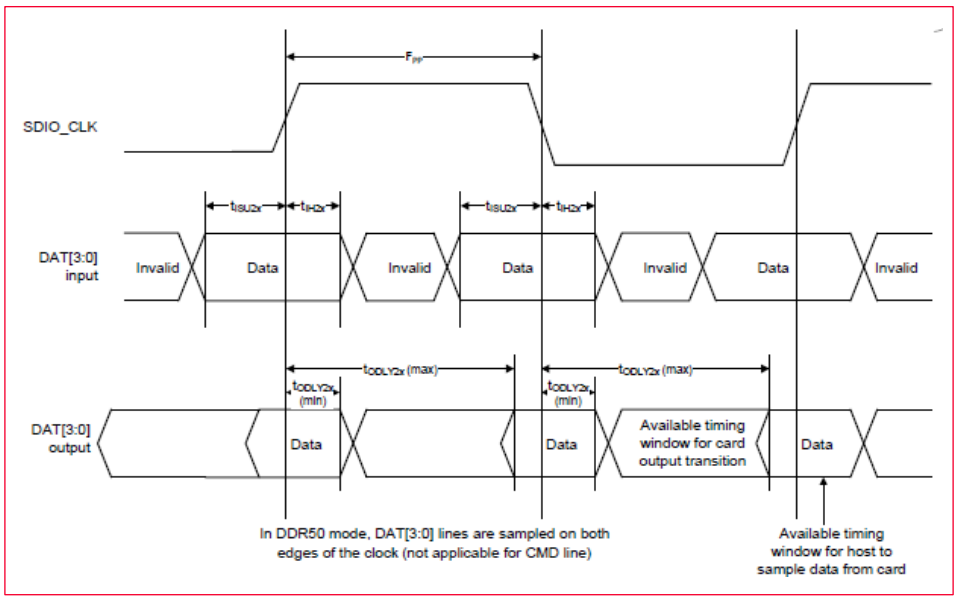

Table 27: SDIO Data Timing Parameters - DDR50 Mode

Parameter	Symbol	Minimum	Maximum	Unit	Comments
Input CMD					
Input setup time	t_{ISU}	6		ns	C_{card} < 10pF (1 card)
Input hold time	t_{IH}	0.8		ns	C_{card} < 10pF (1 card)

Downloaded from Arrow.com.

Parameter	Symbol	Minimum	Maximum	Unit	Comments
Output CMD					
Output delay time	t_{ODLY}		13.7	ns	C_{card} < 30pF (1 card)
Output hold time	t_{OH}	1.5		ns	C_{card} < 15pF (1 card)
Input DAT					
Input setup time	t_{ISU2x}	3		ns	C_{card} < 10pF (1 card)
Input hold time	t_{IH2x}	0.8		ns	C_{card} < 10pF (1 card)
Output DAT					
Output delay time	t_{ODLY2x}		7.5	ns	C_{card} < 25pF (1 card)
Output hold time	t_{OH2x}	1.5		ns	C_{card} < 15pF (1 card)

15.5 PCI Express Interface Parameters

Table 28 describes PCI Express interface parameters.

Table 28: PCI Express Interface Parameters

Parameter	Symbol	Comments	Minimum	Typical	Maximum	Unit
General						
Baud rate	BPS			5		Gbaud
Reference clock peak-to-peak Differential amplitude	VIH	Differential Input High Voltage			150	mV
	VI	Differential Input Low Voltage		–150		mV
	Vcross	Absolute crossing point Voltage	250		550	mV
Receiver						
Differential termination	ZRX-DIFF-DC	Differential termination	80.0	100	120	Ω
DC impedance	ZRX-DC	DC common-mode impedance	40.0	50.0	60.0	Ω
Powered down termination (POS)	ZRX-HIGH-IMP-DCPOS	Power-down or RESET high impedance	100k			Ω
Powered down termination (NEG)	ZRX-HIGH-IMP-DCNEG	Power-down or RESET high impedance	1k			Ω
Input voltage	VRX-DIFF p-p	AC coupled, differential p-p	175			mV
Jitter tolerance	TRX-EYE	Minimum receiver eye width	0.4			UI
Differential return loss	RLRX-DIFF	Differential return loss	10.0			dB
Common-mode return loss	RLRX-CM	Common-mode return loss	6			dB

Downloaded from Arrow.com.

Parameter	Symbol	Comments	Minimum	Typical	Maximum	Unit
Unexpected electrical idle enter detect threshold integration time	TRX-IDEL-DET-DIFFENTERTIME	An unexpected electrical idle must be recognized no longer than this time to signal an unexpected idle condition.			10.0	ms
Signal detect threshold	VRX-IDLE-DET-DIFF p-p	Electrical idle detect threshold	65.0		175	mV
Transmitter						
Output voltage	VTX-DIFFp-p	Differential p-p, programmable in 16 steps	0.8		1200	mV
Output voltage rise time	VTX-RISE	20% to 80%	0.125 (2.5 GT/s) 0.15 (5 GT/s)			UI
Output voltage fall time	VTX-FALL	80% to 20%	0.125 (2.5 GT/s) 0.15 (5 GT/s)			UI
RX detection voltage swing	VTX-RCV-DETECT	The amount of voltage change allowed during receiver detection			600	mV
TX AC peak common mode voltage (5 GT/s)	VTX-CM-AC-PP	TX AC common mode voltage (5 GT/s)			100	mV
TX AC peak common mode voltage (2.5 GT/s)	VTX-CM-AC-P	TX AC common mode voltage (2.5 GT/s)			20.0	mV
Absolute delta of DC common-model voltage during L0 and electrical idle	VTX-CM-DC-ACTIVEIDLE-DELTA	Absolute delta of DC common-model voltage during L0 and electrical idle.	0		100	mV
Absolute delta of DC common-model voltage between D+ and D-	VTX-CM-DC-LINEDELTA	DC offset between D+ and D-	0		25.0	mV
Electrical idle differential peak output voltage	VTX-IDLE-DIFF-AC-p	Peak-to-peak voltage	0		20.0	mV
TX short circuit current	ITX-SHORT	Current limit when TX output is shorted to ground.			90.0	mA
DC differential TX termination	ZTX-DIFF-DC	Low impedance defined during signaling (parameter is captured for 5.0 GHz by RLTX DIFF)	80.0		120	Ω
Differential return loss	RLTX-DIFF	Differential return loss	10 (minimum) for 0.05: 1.25 GHz			dB
Common-mode return loss	RLTX-CM	Common-mode return loss	6.0			dB
TX eye width	TTX-EYE	Minimum TX eye width	0.75			UI

Downloaded from Arrow.com.

- The reference clock inputs comply with the requirements of PCI Express CEM v2.0.
- Measurements taken from differential waveform.
- Measurements taken from single ended waveform.
- Measurements at crossing point where the instantaneous voltage value of the rising edge REFCLK+ equals the falling edge of REFCLK-.
- Refers to the total variations from the lowest crossing point to the highest, regardless of which edge is crossing. Refers to all crossing points for the requirements.

16 DC/RF Characteristics

This section describes the electrical characteristics of the Type 2EA module.

Burst current definition is shown in **Figure 26**.

Figure 26: Burst Current Definition

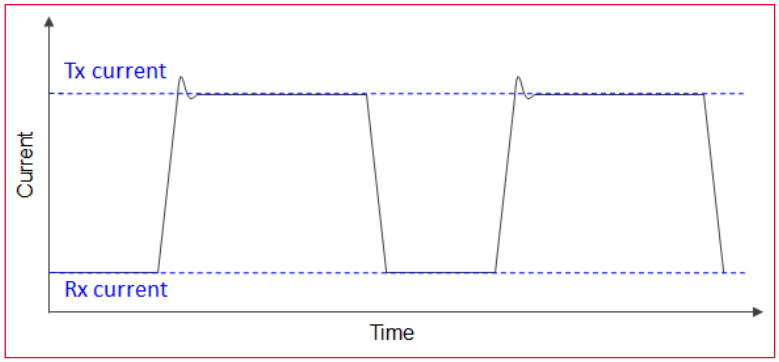

Downloaded from Arrow.com.

16.1 DC/RF Characteristics for IEEE 802.11b - 2.4 GHz

Table 29: DC/RF Characteristics for IEEE 802.11b - 2.4 GHz

Items	Contents
Specification	IEEE 802.11b - 2.4 GHz
Mode	DSSS / CCK
Channel Frequency	2412 to 2472 MHz
Data Rate	1, 2, 5.5, 11 Mbps

16.1.1 High-Rate Condition for IEEE 802.11b - 2.4 GHz

Normal Condition: 25 °C, VBAT = 3.3V, 11 Mbps mode (1-Antenna).

Table 30: High-Rate Conditions for IEEE 802.11b - 2.4 GHz

Items	Contents			
Current Consumption	**Minimum**	**Typical**	**Maximum**	**Unit**
• Tx Mode (Power setting: 18 dBm)		340	450	mA
• Rx Mode		40	55	mA
TX Characteristics	**Minimum**	**Typical**	**Maximum**	**Unit**
Power Levels	15.5	18	20	dBm
Spectrum Mask Margin				
• 1st side lobes (-30 dBr)	0			dB
• 2nd side lobes (-50 dBr)	0			dB
Power-on/off ramp			2.0	us
RF Carrier Suppression	15			dB
Modulation Accuracy (EVM)			35	%
Frequency Tolerance	-20		20	ppm
Spurious Emissions				
• 30 - 47 MHz (BW = 100 kHz)			-36	dBm
• 47 - 74 MHz (BW = 100 kHz)			-54	dBm
• 74 - 87.5 MHz (BW = 100 kHz)			-36	dBm
• 87.5 - 118 MHz (BW =100 kHz)			-54	dBm
• 118 - 174 MHz (BW = 100 kHz)			-36	dBm
• 174 - 230 MHz (BW = 100 kHz)			-54	dBm
• 230 - 470 MHz (BW = 100 kHz)			-36	dBm
• 470 - 862 MHz (BW = 100 kHz)			-54	dBm
• 862 - 1000 MHz (BW = 100 kHz)			-36	dBm
• 1000 - 12750 MHz (BW = 1 MHz)			-30	dBm
Rx Characteristics	**Minimum**	**Typical**	**Maximum**	**Unit**
Minimum Input Level (FER ≤ 8%)		-85	-76	dBm
Maximum Input Level (FER ≤ 8%)	-10			dBm
Adjacent Channel Rejection (FER ≤ 8%)	35			dB

Downloaded from Arrow.com.

16.1.2 Low-Rate Condition for IEEE 802.11b - 2.4 GHz

Normal Condition: 25 °C, VBAT = 3.3V, 1 Mbps mode (1-Antenna).

Table 31: Low-Rate Conditions for IEEE 802.11b - 2.4 GHz

Items	Contents			
Current Consumption	**Minimum**	**Typical**	**Maximum**	**Unit**
• Tx Mode (Power setting: 18 dBm)		300	400	mA
• Rx Mode		40	55	mA
TX Characteristics	**Minimum**	**Typical**	**Maximum**	**Unit**
Power Levels	15.5	18	20	dBm
Spectrum Mask Margin				
• 1st side lobes (-30 dBr)	0			dB
• 2nd side lobes (-50 dBr)	0			dB
Power-on/off ramp			2.0	us
RF Carrier Suppression	15			dB
Modulation Accuracy (EVM)			35	%
Frequency Tolerance	-20		20	ppm
Spurious Emissions				
• 30 - 47 MHz (BW = 100 kHz)			-36	dBm
• 47 - 74 MHz (BW = 100 kHz)			-54	dBm
• 74 - 87.5 MHz (BW = 100 kHz)			-36	dBm
• 87.5 - 118 MHz (BW = 100 kHz)			-54	dBm
• 118 - 174 MHz (BW = 100 kHz)			-36	dBm
• 174 - 230 MHz (BW = 100 kHz)			-54	dBm
• 230 - 470 MHz (BW = 100 kHz)			-36	dBm
• 470 - 862 MHz (BW = 100 kHz)			-54	dBm
• 862 - 1000 MHz (BW = 100 kHz)			-36	dBm
• 1000 - 12750 MHz (BW = 1 MHz)			-30	dBm
Rx Characteristics	**Minimum**	**Typical**	**Maximum**	**Unit**
Minimum Input Level (FER ≤ 8%)			-80	dBm
Maximum Input Level (FER ≤ 8%)	-4			dBm
Adjacent Channel Rejection (FER ≤ 8%)	35			dB

Downloaded from Arrow.com.

16.2 DC/RF Characteristics for IEEE 802.11g - 2.4 GHz

Table 32: DC/RF Characteristics for IEEE 802.11g - 2.4 GHz

Items	Contents
Specification	IEEE 802.11g - 2.4 GHz
Mode	OFDM
Channel Frequency (Spacing)	2412 to 2472 MHz (5 MHz)
Data Rate	6, 9, 12, 18, 24, 36, 48, 54 Mbps

16.2.1 High-Rate Condition for IEEE 802.11g - 2.4 GHz

Normal Condition: 25 °C, VBAT = 3.3V, 54 Mbps mode (1-Antenna).

Table 33: High-Rate Condition for IEEE 802.11g - 2.4 GHz

Items	Contents			
Current Consumption	**Minimum**	**Typical**	**Maximum**	**Unit**
• Tx Mode (Power setting: 17 dBm)		290	370	mA
• Rx Mode		40	55	mA
TX Characteristics	**Minimum**	**Typical**	**Maximum**	**Unit**
Power Levels	14.5	17	19	dBm
Spectrum Mask Margin				
• 9 MHz to 11 MHz (0~ -20 dBr)	0			dB
• 11 MHz to 20 MHz (-20~ -28 dBr)	0			dB
• 20 MHz to 30 MHz (-28~ -40 dBr)	0			dB
• 30 MHz to 33 MHz (-40 dBr)	0			dB
Constellation Error (EVM)			-25	dB
Frequency Tolerance	-20		20	ppm
Spurious Emissions				
• 30 - 47 MHz (BW = 100 kHz)			-36	dBm
• 47 - 74 MHz (BW = 100 kHz)			-54	dBm
• 74 - 87.5 MHz (BW = 100 kHz)			-36	dBm
• 87.5 - 118 MHz (BW = 100 kHz)			-54	dBm
• 118 - 174 MHz (BW = 100 kHz)			-36	dBm
• 174 - 230 MHz (BW = 100 kHz)			-54	dBm
• 230 - 470 MHz (BW = 100 kHz)			-36	dBm
• 470 - 862 MHz (BW = 100 kHz)			-54	dBm
• 862 - 1000 MHz (BW = 100 kHz)			-36	dBm
• 1000 - 12750 MHz (BW = 1 MHz)			-30	dBm
Rx Characteristics	**Minimum**	**Typical**	**Maximum**	**Unit**
Minimum Input Level (PER ≤ 10%)		-74	-65	dBm
Maximum Input Level (PER ≤ 10%)	-20			dBm
Adjacent Channel Rejection (PER ≤ 10%)	-1			dB

Downloaded from Arrow.com.

16.2.2 Low-Rate Condition for IEEE 802.11g - 2.4 GHz

Normal Condition: 25 °C, VBAT = 3.3V, 6 Mbps mode (1-Antenna).

Table 34: Low-Rate Condition for IEEE 802.11g - 2.4 GHz

Items	Contents			
Current Consumption	**Minimum**	**Typical**	**Maximum**	**Unit**
• Tx Mode (Power setting: 17 dBm)		280	360	mA
• Rx Mode		40	55	mA
TX Characteristics	**Minimum**	**Typical**	**Maximum**	**Unit**
Power Levels	14.5	17	19	dBm
Spectrum Mask Margin				
• 9 MHz to 11 MHz (0~ -20 dBr)	0			dB
• 11 MHz to 20 MHz (-20~ -28 dBr)	0			dB
• 20 MHz to 30 MHz (-28~ -40 dBr)	0			dB
• 30 MHz to 33 MHz (-40 dBr)	0			dB
Constellation Error (EVM)			-5	dB
Frequency Tolerance	-20		20	ppm
Spurious Emissions				
• 30 - 47 MHz (BW = 100 kHz)			-36	dBm
• 47 - 74 MHz (BW = 100 kHz)			-54	dBm
• 74 - 87.5 MHz (BW = 100 kHz)			-36	dBm
• 87.5 - 11 8 MHz (BW = 10 kHz)			-54	dBm
• 118 - 174 MHz (BW = 100 kHz)			-36	dBm
• 174 - 230 MHz (BW = 100 kHz)			-54	dBm
• 230 - 470 MHz (BW = 100 kHz)			-36	dBm
• 470 - 862 MHz (BW = 100 kHz)			-54	dBm
• 862 - 1000 MHz (BW = 100 kHz)			-36	dBm
• 1000 - 12750 MHz (BW = 1 MHz)			-30	dBm
RX Characteristics	**Minimum**	**Typical**	**Maximum**	**Unit**
Minimum Input Level (PER ≤ 10%)			-82	dBm
Maximum Input Level (PER ≤ 10%)	-20			dBm
Adjacent Channel Rejection (PER ≤ 10%)	16			dB

Downloaded from Arrow.com.

16.3 DC/RF Characteristics for IEEE 802.11n - 2.4 GHz

Table 35: DC/RF Characteristics for IEEE 802.11n - 2.4 GHz

Items	Contents
Specification	IEEE 802.11n – 2.4 GHz
Mode	OFDM
Channel Frequency (Spacing)	2412 to 2472 MHz (5 MHz)
Data Rate	MCS0 – MCS7

16.3.1 High-Rate Condition for IEEE 802.11n - 2.4 GHz

Normal Condition: 25 °C, VBAT = 3.3V, 65 Mbps (MCS7 - HT 20) mode (1-Antenna).

Table 36: High-Rate Condition for IEEE 802.11n - 2.4 GHz

Items	Contents			
Current Consumption	**Minimum**	**Typical**	**Maximum**	**Unit**
• Tx Mode (Power setting: 16 dBm)		270	350	mA
• Rx Mode		40	55	mA
TX Characteristics	**Minimum**	**Typical**	**Maximum**	**Unit**
Power Levels	13.5	16	18	dBm
Spectrum Mask Margin				
• 9 MHz to 11 MHz (0~ -20 dBr)	0			dB
• 11 MHz to 20 MHz (-20~ -28 dBr)	0			dB
• 20 MHz to 30 MHz (-28~ -45 dBr)	0			dB
• 30 MHz to 33 MHz (-45 dBr)	0			dB
Constellation Error (EVM)			-27	dB
Frequency Tolerance	-20		20	ppm
Spurious Emissions				
• 30 - 47 MHz (BW = 100 kHz)			-36	dBm
• 47 - 74 MHz (BW = 100 kHz)			-54	dBm
• 74 - 87.5 MHz (BW = 100 kHz)			-36	dBm
• 87.5 - 118 MHz (BW = 100 kHz)			-54	dBm
• 118 - 174 MHz (BW = 100 kHz)			-36	dBm
• 174 - 230 MHz (BW = 100 kHz)			-54	dBm
• 230 - 470 MHz (BW = 100 kHz)			-36	dBm
• 470 - 862 MHz (BW = 100 kHz)			-54	dBm
• 862 - 1000 MHz (BW = 100 kHz)			-36	dBm
• 1000 - 12750 MHz (BW = 1 MHz)			-30	dBm
RX Characteristics	**Minimum**	**Typical**	**Maximum**	**Unit**
Minimum Input Level (PER ≤ 10%)		-72	-64	dBm
Maximum Input Level (PER ≤ 10%)	-20			dBm
Adjacent Channel Rejection (PER ≤ 10%)	-1			dB

Downloaded from Arrow.com.

16.3.2 Low-Rate Condition for IEEE 802.11n - 2.4 GHz

Normal Condition: 25 °C, VBAT = 3.3V, MCS0 – HT 20 mode (1-Antenna).

Table 37: Low-Rate Condition for IEEE 802.11n - 2.4 GHz

Items	Contents			
Current Consumption	**Minimum**	**Typical**	**Maximum**	**Unit**
• Tx Mode (Power setting: 17 dBm)		280	360	mA
• Rx Mode		40	55	mA
TX Characteristics	**Minimum**	**Typical**	**Maximum**	**Unit**
Power Levels	13.5	16	18	dBm
Spectrum Mask Margin				
• 9 MHz to 11 MHz (0~ -20 dBr)	0			dB
• 11 MHz to 20 MHz (-20~ -28 dBr)	0			dB
• 20 MHz to 30 MHz (-28~ -45 dBr)	0			dB
• 30 MHz to 33 MHz (-45 dBr)	0			dB
Constellation Error (EVM)			-5	dB
Frequency Tolerance	-20		20	ppm
Spurious Emissions				
• 30 - 47 MHz (BW = 100kHz)			-36	dBm
• 47 - 74 MHz (BW = 100kHz)			-54	dBm
• 74 - 87.5 MHz (BW = 100kHz)			-36	dBm
• 87.5 - 118 MHz (BW = 100kHz)			-54	dBm
• 118 - 174 MHz (BW = 100kHz)			-36	dBm
• 174 - 230 MHz (BW = 100kHz)			-54	dBm
• 230 - 470 MHz (BW = 100kHz)			-36	dBm
• 470 - 862 MHz (BW = 100kHz)			-54	dBm
• 862 - 1000 MHz (BW = 100kHz)			-36	dBm
• 1000 - 12750 MHz (BW = 1 MHz)			-30	dBm
RX Characteristics	**Minimum**	**Typical**	**Maximum**	**Unit**
Minimum Input Level (PER ≤ 10%)			-82	dBm
Maximum Input Level (PER ≤ 10%)	-20			dBm
Adjacent Channel Rejection (PER ≤ 10%)	16			dB

Downloaded from Arrow.com.

16.4 DC/RF Characteristics for IEEE 802.11ax (HE20) - 2.4 GHz

Table 38: DC/RF Characteristics for IEEE 802.11ax (HE20) - 2.4 GHz

Items	Contents
Specification	IEEE 802.11ax - 2.4 GHz
Mode	OFDM (OFDMA)
Channel Frequency (Spacing)	2412 to 2472 MHz (5 MHz)
Data Rate	MCS0 – MCS11

16.4.1 High-Rate Condition for IEEE 802.11ax (HE20) - 2.4 GHz

Normal Condition: 25 °C, VBAT = 3.3V, MCS11 mode (1-Antenna).

Table 39: High-Rate Condition for IEEE 802.11ax (HE20) - 2.4 GHz

Items	Contents			
Current Consumption	**Minimum**	**Typical**	**Maximum**	**Unit**
• Tx Mode (Power setting: 12 dBm)		210	260	mA
• Rx Mode		40	55	mA
TX Characteristics	**Minimum**	**Typical**	**Maximum**	**Unit**
Power Levels (Power setting: 12 dBm)	9.5	12	14	dBm
Spectrum Mask Margin				
• 9 MHz to 11 MHz (0 ~ -20 dBr)	0			dB
• 11 MHz to 20 MHz (-20 ~ -28 dBr)	0			dB
• 20 MHz to 30 MHz (-28 ~ -40 dBr)	0			dB
• 30 MHz to 33 MHz (-40 dBr)	0			dB
Constellation Error (EVM) (Measured at full packet channel estimation)			-35	dB
Frequency Tolerance	-20		20	ppm
Spurious Emissions				
• 30 - 47 MHz (BW = 100 kHz)			-36	dBm
• 47 - 74 MHz (BW = 100 kHz)			-54	dBm
• 74 - 87.5 MHz (BW = 100 kHz)			-36	dBm
• 87.5 - 118 MHz (BW = 100 kHz)			-54	dBm
• 118 - 174 MHz (BW = 100 kHz)			-36	dBm
• 174 - 230 MHz (BW = 100 kHz)			-54	dBm
• 230 - 470 MHz (BW = 100 kHz)			-36	dBm
• 470 - 862 MHz (BW = 100 kHz)			-54	dBm
• 862 - 1000 MHz (BW = 100 kHz)			-36	dBm
• 1000 - 5150 MHz (BW = 1 MHz)			-30	dBm
• 5350 - 5470 MHz (BW = 1 MHz)			-30	dBm
• 5725 - 26000 MHz (BW = 1 MHz)			-30	dBm
RX Characteristics (LDPC enabled)	**Minimum**	**Typical**	**Maximum**	**Unit**
Minimum Input Level (PER ≤ 10%)		-61	-52	dBm
Maximum Input Level (PER ≤ 10%)	-20			dBm
Adjacent Channel Rejection (PER ≤ 10%)	-14			dB

Downloaded from Arrow.com.

16.4.2 Low-Rate Condition for IEEE 802.11ax (HE20) - 2.4 GHz

Normal Condition: 25 °C, VBAT = 3.3V, MCS0 mode (1-Antenna).

Table 40: Low-Rate Condition for IEEE 802.11ax (HE20) - 2.4 GHz

Items	Contents			
Current Consumption	**Minimum**	**Typical**	**Maximum**	**Unit**
• Tx Mode (Power setting: 14 dBm)		230	280	mA
• Rx Mode		40	50	mA
TX Characteristics	**Minimum**	**Typical**	**Maximum**	**Unit**
Power Levels	11.5	14	16	dBm
Spectrum Mask Margin				
• 9 MHz to 11 MHz (0~ -20 dBr)	0			dB
• 11 MHz to 20 MHz (-20~ -28 dBr)	0			dB
• 20 MHz to 30 MHz (-28~ -45 dBr)	0			dB
• 30 MHz to 33 MHz (-45 dBr)	0			dB
Constellation Error (EVM)			-5	dB
Frequency Tolerance	-20		20	ppm
Spurious Emissions				
• 30 - 47 MHz (BW = 100 kHz)			-36	dBm
• 47 - 74 MHz (BW = 100 kHz)			-54	dBm
• 74 - 87.5 MHz (BW = 100 kHz)			-36	dBm
• 87.5 - 118 MHz (BW = 100 kHz)			-54	dBm
• 118 - 174 MHz (BW = 100 kHz)			-36	dBm
• 174 - 230 MHz (BW = 100 kHz)			-54	dBm
• 230 - 470 MHz (BW = 100 kHz)			-36	dBm
• 470 - 862 MHz (BW = 100 kHz)			-54	dBm
• 862 - 1000 MHz (BW = 100 kHz)			-36	dBm
• 1000 - 5150 MHz (BW = 1 MHz)			-30	dBm
• 5350 - 5470 MHz (BW = 1 MHz)			-30	dBm
• 5725 - 26000 MHz (BW = 1 MHz)			-30	dBm
RX Characteristics (LDPC Enabled)	**Minimum**	**Typical**	**Maximum**	**Unit**
Minimum Input Level (PER ≤ 10%)			-82	dBm
Maximum Input Level (PER ≤ 10%)	-20			dBm
Adjacent Channel Rejection (PER ≤ 10%)	16			dB

Downloaded from Arrow.com.

16.5 DC/RF Characteristics for IEEE 802.11a - 5 GHz

Table 41: DC/RF Characteristics for IEEE 802.11a - 5 GHz

Items	Contents
Specification	IEEE 802.11a - 5 GHz
Mode	OFDM
Channel Frequency (Spacing)	5180 to 5320 MHz (20 MHz), 5500 to 5720 MHz (20 MHz), 5745 to 5825 MHz (20 MHz)
Data Rate	6, 9, 12, 18, 24, 36, 48, 54 Mbps

16.5.1 High-Rate Condition for IEEE 802.11a - 5 GHz

Normal Condition: 25 °C, VBAT = 3.3V, 54 Mbps mode (1-Antenna).

Table 42: High-Rate Condition for IEEE 802.11a - 5 GHz

Items	Contents			
Current Consumption	**Minimum**	**Typical**	**Maximum**	**Unit**
• Tx Mode (Power setting: 13 dBm)		410	520	mA
• Rx Mode		50	60	mA
TX Characteristics	**Minimum**	**Typical**	**Maximum**	**Unit**
Power Levels	14	16	18	dBm
Spectrum Mask				
• 9 MHz to 11 MHz (0 ~ -20 dBr)	0			dB
• 11 MHz to 20 MHz (-20 ~ -28 dBr)	0			dB
• 20 MHz to 30 MHz (-28 ~ -40 dBr)	0			dB
• 30 MHz to 33 MHz (-40 dBr)	0			dB
Constellation Error (EVM)			-25	dB
Frequency Tolerance	-20		20	ppm
Spurious Emissions				
• 30 - 47 MHz (BW = 100 kHz)			-36	dBm
• 47 - 74 MHz (BW = 100 kHz)			-54	dBm
• 74 - 87.5 MHz (BW = 100 kHz)			-36	dBm
• 87.5 - 118 MHz (BW = 100 kHz)			-54	dBm
• 118 - 174 MHz (BW = 100 kHz)			-36	dBm
• 174 - 230 MHz (BW = 100 kHz)			-54	dBm
• 230 - 470 MHz (BW = 100 kHz)			-36	dBm
• 470 - 862 MHz (BW = 100 kHz)			-54	dBm
• 862 - 1000 MHz (BW = 100 kHz)			-36	dBm
• 1000 - 5150 MHz (BW = 1 MHz)			-30	dBm
• 5350 - 5470 MHz (BW = 1 MHz)			-30	dBm
• 5725 - 26000 MHz (BW = 1 MHz)			-30	dBm
RX Characteristics	**Minimum**	**Typical**	**Maximum**	**Unit**
Minimum Input Level (PER ≤ 10%)		-73	-65	dBm
Maximum Input Level (PER ≤ 10%)	-30			dBm
Adjacent Channel Rejection (PER ≤ 10%)	-1			dB

Downloaded from Arrow.com.

16.5.2 Low-Rate Condition for IEEE 802.11a - 5 GHz

Normal Condition: 25 °C, VBAT = 3.3V, 6 Mbps mode (1-Antenna).

Table 43: Low-Rate Condition for IEEE 802.11a - 5 GHz

Items	Contents			
Current Consumption	**Minimum**	**Typical**	**Maximum**	**Unit**
• Tx Mode (Power setting: 16 dBm)		410	520	mA
• Rx Mode		50	60	mA
TX Characteristics	**Minimum**	**Typical**	**Maximum**	**Unit**
Power Levels	14	16	18	dBm
Spectrum Mask				
• 9 MHz to 11 MHz (0~ -20 dBr)	0			dB
• 11 MHz to 20 MHz (-20~ -28 dBr)	0			dB
• 20 MHz to 30 MHz (-28~ -40 dBr)	0			dB
• 30 MHz to 33 MHz (-40 dBr)	0			dB
Constellation Error (EVM) (Measured at enhanced mode)			-5	dB
Frequency Tolerance	-20		20	ppm
Spurious Emissions				
• 30 - 47 MHz (BW = 100 kHz)			-36	dBm
• 47 - 74 MHz (BW = 100 kHz)			-54	dBm
• 74 - 87.5 MHz (BW = 100 kHz)			-36	dBm
• 87.5 - 118 MHz (BW = 100 kHz)			-54	dBm
• 118 - 174 MHz (BW = 100 kHz)			-36	dBm
• 174 - 230 MHz (BW = 100 kHz)			-54	dBm
• 230 - 470 MHz (BW = 100 kHz)			-36	dBm
• 470 - 862 MHz (BW = 100 kHz)			-54	dBm
• 862 - 1000 MHz (BW = 100 kHz)			-36	dBm
• 1000 - 5150 MHz (BW = 1 MHz)			-30	dBm
• 5350 - 5470 MHz (BW = 1 MHz)			-30	dBm
• 5725 - 26000 MHz (BW = 1 MHz)			-30	dBm
RX Characteristics	**Minimum**	**Typical**	**Maximum**	**Unit**
Minimum Input Level (PER ≤ 10%)			-82	dBm
Maximum Input Level (PER ≤ 10%)	-30			dBm
Adjacent Channel Rejection (PER ≤ 10%)	16			dB

Downloaded from Arrow.com.

16.6 DC/RF Characteristics for IEEE 802.11n (HT20) - 5 GHz

Table 44: DC/RF Characteristics for IEEE 802.11n (HT20) - 5 GHz

Items	Contents
Specification	IEEE 802.11n - 5 GHz
Mode	OFDM
Channel Frequency (Spacing)	5180 to 5320 MHz (20 MHz), 5500 to 5720 MHz (20 MHz), 5745 to 5825 MHz (20 MHz)
Data Rate	MCS0 - MCS7

16.6.1 High-Rate Condition for IEEE 802.11n (HT20) - 5 GHz

Normal Condition: 25 °C, VBAT = 3.3V, 65 Mbps (MCS7 - HT20) Mode (1-Antenna).

Table 45: High-Rate Condition for IEEE 802.11n (HT20) - 5 GHz

Items	Contents			
Current Consumption	**Minimum**	**Typical**	**Maximum**	**Unit**
• Tx Mode (Power setting: 14 dBm)		370	460	mA
• Rx Mode		50	60	mA
TX Characteristics	**Minimum**	**Typical**	**Maximum**	**Unit**
Power Levels	12	14	16	dBm
Spectrum Mask Margin				
• 9 MHz to 11 MHz (0 ~ -20 dBr)	0			dB
• 11 MHz to 20 MHz (-20 ~ -28 dBr)	0			dB
• 20 MHz to 30 MHz (-28 ~ -45 dBr)	0			dB
• 30 MHz to 33 MHz (-45 dBr)	0			dB
Constellation Error (EVM) (Measured at enhanced mode)			-27	dB
Frequency Tolerance	-20		20	ppm
Spurious Emissions				
• 30 - 47 MHz (BW = 100 kHz)			-36	dBm
• 47 - 74 MHz (BW = 100 kHz)			-54	dBm
• 74 - 87.5 MHz (BW = 100 kHz)			-36	dBm
• 87.5 - 118 MHz (BW = 100 kHz)			-54	dBm
• 118 - 174 MHz (BW = 100 kHz)			-36	dBm
• 174 - 230 MHz (BW = 100 kHz)			-54	dBm
• 230 - 470 MHz (BW = 100 kHz)			-36	dBm
• 470 - 862 MHz (BW = 100 kHz)			-54	dBm
• 862 - 1000 MHz (BW = 100 kHz)			-36	dBm
• 1000 - 5150 MHz (BW = 1 MHz)			-30	dBm
• 5350 - 5470 MHz (BW = 1 MHz)			-30	dBm
• 5725 - 26000 MHz (BW = 1 MHz)			-30	dBm
RX Characteristics	**Minimum**	**Typical**	**Maximum**	**Unit**
Minimum Input Level (PER ≤ 10%)		-72	-64	dBm
Maximum Input Level (PER ≤ 10%)	-30			dBm
Adjacent Channel Rejection (PER ≤10%)	-2			dB

Downloaded from Arrow.com.

16.6.2 Low-Rate Condition for IEEE 802.11n (HT20) - 5 GHz

Normal Condition: 25 °C, VBAT = 3.3V, MCS0 - HT20 Mode (1-Antenna).

Table 46: Low-Rate Condition for IEEE 802.11n (HT20) - 5 GHz

Items	Contents			
Current Consumption	**Minimum**	**Typical**	**Maximum**	**Unit**
• Tx Mode (Power setting: 14 dBm)		360	450	mA
• Rx Mode		50	60	mA
TX Characteristics	**Minimum**	**Typical**	**Maximum**	**Unit**
Power Levels	12	14	16	dBm
Spectrum Mask Margin				
• 9 MHz to 11 MHz (0~ -20 dBr)	0			dB
• 11 MHz to 20 MHz (-20~ -28 dBr)	0			dB
• 20 MHz to 30 MHz (-28~ -45 dBr)	0			dB
• 30 MHz to 33 MHz (-45 dBr)	0			dB
Constellation Error (EVM) (Measured at enhanced mode)			-5	dB
Frequency Tolerance	-20		20	ppm
Spurious Emissions				
• 30-47 MHz (BW = 100 kHz)			-36	dBm
• 47-74 MHz (BW = 100 kHz)			-54	dBm
• 74-87.5 MHz (BW = 100 kHz)			-36	dBm
• 87.5-118 MHz (BW = 100 kHz)			-54	dBm
• 118-174 MHz (BW = 100 kHz)			-36	dBm
• 174-230 MHz (BW = 100 kHz)			-54	dBm
• 230-470 MHz (BW = 100 kHz)			-36	dBm
• 470-862 MHz (BW = 100 kHz)			-54	dBm
• 862-1000 MHz (BW = 100 kHz)			-36	dBm
• 1000-5150 MHz (BW = 1 MHz)			-30	dBm
• 5350-5470 MHz (BW = 1 MHz)			-30	dBm
• 5725-26000 MHz (BW = 1 MHz)			-30	dBm
RX Characteristics	**Minimum**	**Typical**	**Maximum**	**Unit**
Minimum Input Level (PER ≤ 10%)			-82	dBm
Maximum Input Level (PER ≤ 10%)	-30			dBm
Adjacent Channel Rejection (PER ≤10%)	16			dB

Downloaded from Arrow.com.

16.7 DC/RF Characteristics for IEEE 802.11n (HT40) - 5 GHz

Table 47: DC/RF Characteristics for IEEE 802.11n (HT40) - 5 GHz

Items	Contents
Specification	IEEE 802.11n - 5 GHz
Mode	OFDM
Channel Frequency (Spacing)	5190 to 5310 MHz (40 MHz), 5510 to 5710 MHz (40 MHz), 5755 to 5795 MHz (40 MHz)
Data Rate	MCS0 - MCS7

16.7.1 High-Rate Condition for IEEE 802.11n (HT40) - 5 GHz

Normal Condition: 25 °C, VBAT = 3.3V, 135 Mbps (MCS7 - HT40) mode (1-Antenna).

Table 48: High-Rate Condition for IEEE 802.11n (HT40) - 5 GHz

Items	Contents			
Current Consumption	**Minimum**	**Typical**	**Maximum**	**Unit**
• Tx Mode (Power setting: 14 dBm)		390	480	mA
• Rx Mode		55	65	mA
TX Characteristics	**Minimum**	**Typical**	**Maximum**	**Unit**
Power Levels	12	14	16	dBm
Spectrum Mask Margin				
• 19 MHz to 21 MHz (0 ~ -20 dBr)	0			dB
• 21 MHz to 40 MHz (-20 ~ -28 dBr)	0			dB
• 40 MHz to 60 MHz (-28 ~ -45 dBr)	0			dB
• 60 MHz to 80 MHz (-45 dBr)	0			dB
Constellation Error (EVM) (Measured at enhanced mode)			-27	dB
Frequency Tolerance	-20		20	ppm
Spurious Emissions				
• 30 - 47 MHz (BW = 100 kHz)			-36	dBm
• 47 - 74 MHz (BW = 100 kHz)			-54	dBm
• 74 - 87.5 MHz (BW = 100 kHz)			-36	dBm
• 87.5 - 118 MHz (BW = 100 kHz)			-54	dBm
• 118 - 174 MHz (BW = 100 kHz)			-36	dBm
• 174 - 230 MHz (BW = 100 kHz)			-54	dBm
• 230 - 470 MHz (BW = 100 kHz)			-36	dBm
• 470 - 862 MHz (BW = 100 kHz)			-54	dBm
• 862 - 1000 MHz (BW = 1 00 kHz)			-36	dBm
• 1000 - 5150 MHz (BW = 1 MHz)			-30	dBm
• 5350 - 5470 MHz (BW = 1 MHz)			-30	dBm
• 5725 - 26000 MHz (BW = 1 MHz)			-30	dBm
RX Characteristics	**Minimum**	**Typical**	**Maximum**	**Unit**
Minimum Input Level (PER ≤ 10%)		-69	-61	dBm
Maximum Input Level (PER ≤ 10%)	-30			dBm
Adjacent Channel Rejection (PER ≤ 10%)	-2			dB

Downloaded from Arrow.com.

16.7.2 Low-Rate Condition for IEEE 802.11n (HT40) - 5 GHz

Normal Condition: 25 °C, VBAT = 3.3V, MCS0 - HT40 mode (1-Antenna).

Table 49: Low-Rate Condition for IEEE 802.11n (HT40) - 5 GHz

Items	Contents			
Current Consumption	**Minimum**	**Typical**	**Maximum**	**Unit**
• Tx Mode (Power setting: 14 dBm)		380	470	mA
• Rx Mode		55	65	mA
TX Characteristics	**Minimum**	**Typical**	**Maximum**	**Unit**
Power Levels	12	14	16	dBm
Spectrum Mask Margin				
• 19 MHz to 21 MHz (0 ~ -20 dBr)	0			dB
• 21 MHz to 40 MHz (-20 ~ -28 dBr)	0			dB
• 40 MHz to 60 MHz (-28 ~ -45 dBr)	0			dB
• 60 MHz to 80 MHz (-45 dBr)	0			dB
Constellation Error (EVM) (Measured at enhanced mode)			-5	dB
Frequency Tolerance	-20		20	ppm
Spurious Emissions				
30 - 47 MHz (BW = 100 kHz)			-36	dBm
47 - 74 MHz (BW = 100 kHz)			-54	dBm
74 - 87.5 MHz (BW = 100 kHz)			-36	dBm
87.5 - 118 MHz (BW = 100 kHz)			-54	dBm
118 - 174 MHz (BW = 100 kHz)			-36	dBm
174 - 230 MHz (BW = 100 kHz)			-54	dBm
230 - 470 MHz (BW = 100 kHz)			-36	dBm
470 - 862 MHz (BW = 100 kHz)			-54	dBm
862 - 1000 MHz (BW = 100 kHz)			-36	dBm
1000 - 5150 MHz (BW = 1 MHz)			-30	dBm
5350 - 5470 MHz (BW = 1 MHz)			-30	dBm
5725 - 26000 MHz (BW = 1 MHz)			-30	dBm
RX Characteristics	**Minimum**	**Typical**	**Maximum**	**Unit**
Minimum Input Level (PER ≤ 10%)			-79	dBm
Maximum Input Level (PER ≤ 10%)	-30			dBm
Adjacent Channel Rejection (PER ≤ 10%)	16			dB

Downloaded from Arrow.com.

16.8 DC/RF Characteristics for IEEE 802.11ac (VHT40) - 5 GHz

Table 50: DC/RF Characteristics for IEEE 802.11ac (VHT40) - 5 GHz

Items	Contents
Specification	IEEE 802.11ac - 5 GHz
Mode	OFDM
Channel Frequency (Spacing)	5190 to 5310 MHz (40 MHz), 5510 to 5710 MHz (40 MHz), 5755 to 5795 MHz (40 MHz)
Data Rate	MCS0 - MCS9

16.8.1 High-Rate Condition for IEEE 802.11ac (VHT40) - 5 GHz

Normal Condition: 25 °C, VBAT = 3.3V, 180 Mbps (MCS9 - VHT40) mode (1-Antenna).

Table 51: High-Rate Condition for IEEE 802.11ac (VHT40) - 5 GHz

Items	Contents			
Current Consumption	**Minimum**	**Typical**	**Maximum**	**Unit**
• Tx Mode (Power setting: 10 dBm)		330	410	mA
• Rx Mode		55	65	mA
TX Characteristics	**Minimum**	**Typical**	**Maximum**	**Unit**
Power Levels	8	10	12	dBm
Spectrum Mask Margin				
• 19 MHz to 21 MHz (0~ -20 dBr)	0			dB
• 21MHz to 40 MHz (-20~ -28 dBr)	0			dB
• 40 MHz to 60 MHz (-28~ -40 dBr)	0			dB
• 60 MHz to 80 MHz (-40 dBr)	0			dB
Constellation Error (EVM) (Measured at enhanced mode)			-32	dB
Frequency Tolerance	-20		20	ppm
Spurious Emissions				
• 30 - 47 MHz (BW = 100 KHz)			-36	dBm
• 47 - 74 MHz (BW = 100 KHz)			-54	dBm
• 74 - 87.5 MHz (BW = 100 KHz)			-36	dBm
• 87.5 - 118 MHz (BW = 100 KHz)			-54	dBm
• 118 - 174 MHz (BW = 100 KHz)			-36	dBm
• 174 - 230 MHz (BW = 100 KHz)			-54	dBm
• 230 - 470 MHz (BW = 100 KHz)			-36	dBm
• 470 - 862 MHz (BW = 100 KHz)			-54	dBm
• 862 - 1000 MHz (BW = 100 KHz)			-36	dBm
• 1000 - 5150 MHz (BW = 1 MHz)			-30	dBm
• 5350 - 5470 MHz (BW = 1 MHz)			-30	dBm
• 5725 - 26000 MHz (BW = 1 MHz)			-30	dBm
RX Characteristics	**Minimum**	**Typical**	**Maximum**	**Unit**
Minimum Input Level (PER ≤ 10%)		-63	-54	dBm
Maximum Input Level (PER ≤ 10%)	-30			dBm
Adjacent Channel Rejection (PER ≤ 10%)	-9			dB

Downloaded from Arrow.com.

16.8.2 Low-Rate Condition for IEEE 802.11ac (VHT40) - 5 GHz

Normal Condition: 25 °C, VBAT = 3.3V, MCS0 - VHT40 mode (1-Antenna).

Table 52: Low-Rate Condition for IEEE 802.11ac (VHT40) - 5 GHz

Items	Contents			
Current Consumption	**Minimum**	**Typical**	**Maximum**	**Unit**
• Tx Mode (Power setting: 14 dBm)		380	460	mA
• Rx Mode		55	65	mA
TX Characteristics	**Minimum**	**Typical**	**Maximum**	**Unit**
Power Levels	12	14	16	dBm
Spectrum Mask Margin				
• 19 MHz to 21 MHz (0~ -20 dBr)	0			dB
• 21MHz to 40 MHz (-20~ -28 dBr)	0			dB
• 40 MHz to 60 MHz (-28~ -40 dBr)	0			dB
• 60 MHz to 80 MHz (-40 dBr)	0			dB
Constellation Error (EVM) (Measured at enhanced mode)			-5	dB
Frequency Tolerance	-20		20	ppm
Spurious Emissions				
• 30 - 47 MHz (BW = 100 KHz)			-36	dBm
• 47 - 74 MHz (BW = 100 KHz)			-54	dBm
• 74 - 87.5 MHz (BW = 100 KHz)			-36	dBm
• 87.5 - 118 MHz (BW = 100 KHz)			-54	dBm
• 118 - 174 MHz (BW = 100 KHz)			-36	dBm
• 174 - 230 MHz (BW = 100 KHz)			-54	dBm
• 230 - 470 MHz (BW = 100 KHz)			-36	dBm
• 470 - 862 MHz (BW = 100 KHz)			-54	dBm
• 862 - 1000 MHz (BW = 100 KHz)			-36	dBm
• 1000 - 5150 MHz (BW = 1 MHz)			-30	dBm
• 5350 - 5470 MHz (BW = 1 MHz)			-30	dBm
• 5725 - 26000 MHz (BW = 1 MHz)			-30	dBm
RX Characteristics	**Minimum**	**Typical**	**Maximum**	**Unit**
Minimum Input Level (PER ≤ 10%)			-79	dBm
Maximum Input Level (PER ≤ 10%)	-30			dBm
Adjacent Channel Rejection (PER ≤ 10%)	16			dB

Downloaded from Arrow.com.

16.9 DC/RF Characteristics for IEEE 802.11ac (VHT80) - 5 GHz

Table 53: DC/RF Characteristics for IEEE 802.11ac (VHT80) - 5 GHz

Items	Contents
Specification	IEEE 802.11ac - 5 GHz
Mode	OFDM
Channel Frequency (Spacing)	5210 to 5290 MHz (80 MHz), 5530 to 5690 MHz (80 MHz), 5775 MHz (80 MHz)
Data Rate	MCS0 - MCS9

16.9.1 High-Rate Condition for IEEE 802.11ac (VHT80) - 5 GHz

Normal Condition: 25 °C, VBAT = 3.3V, 390 Mbps (MCS9 - VHT80) mode (1-Antenna).

Table 54: High-Rate Condition for IEEE 802.11ac (VHT80) - 5 GHz

Items	Contents			
Current Consumption	**Minimum**	**Typical**	**Maximum**	**Unit**
• Tx Mode (Power setting: 10 dBm)		340	430	mA
• Rx Mode		65	75	mA
TX Characteristics	**Minimum**	**Typical**	**Maximum**	**Unit**
Power Levels	8	10	12	dBm
Spectrum Mask Margin				
• 39 MHz to 41 MHz (0~ -20 dBr)	0			dB
• 41 MHz to 80 MHz (-20~ -28 dBr)	0			dB
• 80 MHz to 120 MHz (-28~ -40 dBr)	0			dB
• 120 MHz to 140 MHz (-40 dBr)	0			dB
Constellation Error (EVM) (Measured at enhanced mode)			-32	dB
Frequency Tolerance	-20		20	ppm
Spurious Emissions				
• 30 - 47 MHz (BW = 100 KHz)			-36	dBm
• 47 - 74 MHz (BW = 100 KHz)			-54	dBm
• 74 - 87.5 MHz (BW = 100 KHz)			-36	dBm
• 87.5 - 118 MHz (BW = 100 KHz)			-54	dBm
• 118 - 174 MHz (BW = 100 KHz)			-36	dBm
• 174 - 230 MHz (BW = 100 KHz)			-54	dBm
• 230 - 470 MHz (BW = 100 KHz)			-36	dBm
• 470 - 862 MHz (BW = 100 KHz)			-54	dBm
• 862 - 1000 MHz (BW = 100 KHz)			-36	dBm
• 1000 - 5150 MHz (BW = 1 MHz)			-30	dBm
• 5350 - 5470 MHz (BW = 1 MHz)			-30	dBm
• 5725 - 26000 MHz (BW = 1 MHz)			-30	dBm
RX Characteristics	**Minimum**	**Typical**	**Maximum**	**Unit**
Minimum Input Level (PER ≤ 10%)		-60	-51	dBm
Maximum Input Level (PER ≤ 10%)	-30			dBm
Adjacent Channel Rejection (PER ≤ 10%)	-9			dB

Downloaded from Arrow.com.

16.9.2 Low-Rate Condition for IEEE 802.11ac (VHT80) - 5 GHz

Normal Condition: 25 °C, VBAT = 3.3V, MCS0 - VHT80 mode (1-Antenna).

Table 55: Low-Rate Condition for IEEE 802.11ac (VHT80) - 5 GHz

Items	Contents			
Current Consumption	**Minimum**	**Typical**	**Maximum**	**Unit**
• Tx Mode (Power setting: 14 dBm)		390	480	mA
• Rx Mode		65	75	mA
TX Characteristics	**Minimum**	**Typical**	**Maximum**	**Unit**
Power Levels	12	14	16	dBm
Spectrum Mask Margin				
• 39 MHz to 41 MHz (0 ~ -20 dBr)	0			dB
• 41 MHz to 80 MHz (-20 ~ -28 dBr)	0			dB
• 80 MHz to 120 MHz (-28 ~ -40 dBr)	0			dB
• 120 MHz to 140 MHz (-40 dBr)	0			dB
Constellation Error (EVM) (Measured at enhanced mode)			-5	dB
Frequency Tolerance	-20		20	ppm
Spurious Emissions				
• 30 - 47 MHz (BW = 100 kHz)			-36	dBm
• 47 - 74 MHz (BW = 100 kHz)			-54	dBm
• 74 - 87.5 MHz (BW = 100 kHz)			-36	dBm
• 87.5 - 118 MHz (BW = 100 kHz)			-54	dBm
• 118 - 174 MHz (BW = 100 kHz)			-36	dBm
• 174 - 230 MHz (BW = 100 kHz)			-54	dBm
• 230 - 470 MHz (BW = 100 kHz)			-36	dBm
• 470 - 862 MHz (BW = 100 kHz)			-54	dBm
• 862 - 1000 MHz (BW = 100 kHz)			-36	dBm
• 1000 - 5150 MHz (BW = 1 MHz)			-30	dBm
• 5350 - 5470 MHz (BW = 1 MHz)			-30	dBm
• 5725 - 26000 MHz (BW = 1 MHz)			-30	dBm
RX Characteristics	**Minimum**	**Typical**	**Maximum**	**Unit**
Minimum Input Level (PER ≤ 10%)			-76	dBm
Maximum Input Level (PER ≤ 10%)	-30			dBm
Adjacent Channel Rejection (PER ≤ 10%)	16			dB

Downloaded from Arrow.com.

16.10 DC/RF Characteristics for IEEE 802.11ax (HE20) - 5 GHz

Table 56: DC/RF Characteristics for IEEE 802.11ax (HE20) - 5 GHz

Items	Contents
Specification	IEEE 802.11ax - 5 GHz
Mode	OFDM (OFDMA)
Channel Frequency (Spacing)	5180 to 5320 MHz (20 MHz), 5500 to 5720 MHz (20 MHz), 5745 to 5825 MHz (20 MHz)
Data Rate	MCS0 - MCS11

16.10.1 High-Rate Condition for IEEE 802.11ax (HE20) - 5 GHz

Normal Condition: 25 °C, VBAT = 3.3V, MCS11 – HE20 mode (1-Antenna).

Table 57: High-Rate Condition for IEEE 802.11ax (HE20) - 5 GHz

Items	Contents			
Current Consumption	**Minimum**	**Typical**	**Maximum**	**Unit**
• Tx Mode (Power setting: 9 dBm)		290	360	mA
• Rx Mode		50	60	mA
TX Characteristics	**Minimum**	**Typical**	**Maximum**	**Unit**
Power Levels	7	9	11	dBm
Spectrum Mask				
• 9 MHz to 11 MHz (0~ -20 dBr)	0			dB
• 11 MHz to 20 MHz (-20~ -28 dBr)	0			dB
• 20 MHz to 30 MHz (-28~ -40 dBr)	0			dB
• 30 MHz to 33 MHz (-40 dBr)	0			dB
Constellation Error (EVM) (Measured at full packet channel estimation)			-35	dB
Frequency Tolerance	-20		20	ppm
Spurious Emissions				
• 30 - 47 MHz (BW = 100 KHz)			-36	dBm
• 47 - 74 MHz (BW = 100 KHz)			-54	dBm
• 74 - 87.5 MHz (BW = 100 KHz)			-36	dBm
• 87.5 - 118 MHz (BW = 100 KHz)			-54	dBm
• 118 - 174 MHz (BW = 100 KHz)			-36	dBm
• 174 - 230 MHz (BW = 100 KHz)			-54	dBm
• 230 - 470 MHz (BW = 100 KHz)			-36	dBm
• 470 - 862 MHz (BW = 100 KHz)			-54	dBm
• 862 - 1000 MHz (BW = 100 KHz)			-36	dBm
• 1000 - 5150 MHz (BW = 1 MHz)			-30	dBm
• 5350 - 5470 MHz (BW = 1 MHz)			-30	dBm
• 5725 - 26000 MHz (BW = 1 MHz)			-30	dBm
RX Characteristics (LDPC enabled)	**Minimum**	**Typical**	**Maximum**	**Unit**
Minimum Input Level (PER ≤ 10%)		-60	-52	dBm
Maximum Input Level (PER ≤ 10%)	-30			dBm

Downloaded from Arrow.com.

Items	Contents			
Adjacent Channel Rejection (PER ≤ 10%)	-14			dB

16.10.2 Low-Rate Condition for IEEE 802.11ax (HE20) - 5 GHz

Normal Condition: 25 °C, VBAT = 3.3V, MCS0 – HE20 mode (1-Antenna).

Table 58: Low-Rate Condition for IEEE 802.11ax (HE20) - 5 GHz

Items	Contents			
Current Consumption	**Minimum**	**Typical**	**Maximum**	**Unit**
• Tx Mode (Power setting: 12 dBm)		340	410	mA
• Rx Mode		50	60	mA
TX Characteristics	**Minimum**	**Typical**	**Maximum**	**Unit**
Power Levels	10	12	14	dBm
Spectrum Mask				
• 9 MHz to 11 MHz (0~ -20 dBr)	0			dB
• 11 MHz to 20 MHz (-20~ -28 dBr)	0			dB
• 20 MHz to 30 MHz (-28~ -40 dBr)	0			dB
• 30 MHz to 33 MHz (-40 dBr)	0			dB
Constellation Error (EVM) (Measured at full packet channel estimation)			-5	dB
Frequency Tolerance	-20		20	ppm
Spurious Emissions				
• 30 - 47 MHz (BW = 100 KHz)			-36	dBm
• 47 - 74 MHz (BW = 100 KHz)			-54	dBm
• 74 - 87.5 MHz (BW = 100 KHz)			-36	dBm
• 87.5 - 118 MHz (BW = 100 KHz)			-54	dBm
• 118 - 174 MHz (BW = 100 KHz)			-36	dBm
• 174 - 230 MHz (BW = 100 KHz)			-54	dBm
• 230 - 470 MHz (BW = 100 KHz)			-36	dBm
• 470 - 862 MHz (BW = 100 KHz)			-54	dBm
• 862 - 1000 MHz (BW = 100 KHz)			-36	dBm
• 1000 - 5150 MHz (BW = 1 MHz)			-30	dBm
• 5350 - 5470 MHz (BW = 1 MHz)			-30	dBm
• 5725 - 26000 MHz (BW = 1 MHz)			-30	dBm
RX Characteristics (LDPC enabled)	**Minimum**	**Typical**	**Maximum**	**Unit**
Minimum Input Level (PER ≤ 10%)			-82	dBm
Maximum Input Level (PER ≤ 10%)	-30			dBm
Adjacent Channel Rejection (PER ≤ 10%)	16			dB

Downloaded from Arrow.com.

16.11 DC/RF Characteristics for IEEE 802.11ax (HE40) - 5 GHz

Table 59: DC/RF Characteristics for IEEE 802.11ax (HE40) - 5 GHz

Items	Contents
Specification	IEEE 802.11ax - 5 GHz
Mode	OFDM (OFDMA)
Channel Frequency (Spacing)	5190 to 5310 MHz (40 MHz), 5510 to 5710 MHz (40 MHz), 5755 to 5795 MHz (40 MHz)
Data Rate	MCS0 – MCS11

16.11.1 High-Rate Condition for IEEE 802.11ax (HE40) - 5 GHz

Normal Condition: 25 °C, VBAT = 3.3V, MCS11 – HE40 mode (1-Antenna).

Table 60: High-Rate Condition for IEEE 802.11ax (HE40) - 5 GHz

Items	Contents			
Current Consumption	**Minimum**	**Typical**	**Maximum**	**Unit**
• Tx Mode (Power setting: 9 dBm)		300	360	mA
• Rx Mode		55	65	mA
TX Characteristics	**Minimum**	**Typical**	**Maximum**	**Unit**
Power Levels	7	9	11	dBm
Spectrum Mask Margin				
• 19 MHz to 21 MHz (0 ~ -20 dBr)	0			dB
• 21 MHz to 40 MHz (-20 ~ -28 dBr)	0			dB
• 40 MHz to 60 MHz (-28 ~ -40 dBr)	0			dB
• 60 MHz to 80 MHz (-40 dBr)	0			dB
Constellation Error (EVM) (Measured at full packet channel estimation)			-35	dB
Frequency Tolerance	-20		20	ppm
Spurious Emissions				
• 30 - 47 MHz (BW = 100 kHz)			-36	dBm
• 47 - 74 MHz (BW = 100 kHz)			-54	dBm
• 74 - 87.5 MHz (BW = 100 kHz)			-36	dBm
• 87.5 - 118 MHz (BW = 100 kHz)			-54	dBm
• 118 - 174 MHz (BW = 100 kHz)			-36	dBm
• 174 - 230 MHz (BW = 100 kHz)			-54	dBm
• 230 - 470 MHz (BW = 100 kHz)			-36	dBm
• 470 - 862 MHz (BW = 100 kHz)			-54	dBm
• 862 - 1000 MHz (BW = 1 00 kHz)			-36	dBm
• 1000 - 5150 MHz (BW = 1 MHz)			-30	dBm
• 5350 - 5470 MHz (BW = 1 MHz)			-30	dBm
• 5725 - 26000 MHz (BW = 1 MHz)			-30	dBm
RX Characteristics (LDPC enabled)	**Minimum**	**Typical**	**Maximum**	**Unit**
Minimum Input Level (PER ≤ 10%)		-57	-49	dBm
Maximum Input Level (PER ≤ 10%)	-30			dBm

Downloaded from Arrow.com.

Items	Contents			
Adjacent Channel Rejection (PER ≤ 10%)	-14			dB

16.11.2 Low-Rate Condition for IEEE 802.11ax (HE40) - 5 GHz

Normal Condition: 25 °C, VBAT = 3.3V, MCS0 – HE40 mode (1-Antenna).

Table 61: Low-Rate Condition for IEEE 802.11ax (HE40) - 5 GHz

Items	Contents			
Current Consumption	**Minimum**	**Typical**	**Maximum**	**Unit**
• Tx Mode (Power setting: 12 dBm)		360	400	mA
• Rx Mode		55	65	mA
TX Characteristics	**Minimum**	**Typical**	**Maximum**	**Unit**
Power Levels	10	12	14	dBm
Spectrum Mask				
• 19 MHz to 21 MHz (0 ~ -20 dBr)	0			dB
• 21 MHz to 40 MHz (-20 ~ -28 dBr)	0			dB
• 40 MHz to 60 MHz (-28 ~ -40 dBr)	0			dB
• 60 MHz to 80 MHz (-40 dBr)	0			dB
Constellation Error (EVM) (Measured at full packet channel estimation)			-5	dB
Frequency Tolerance	-20		20	ppm
Spurious Emissions				
• 30 - 47 MHz (BW = 100 kHz)			-36	dBm
• 47 - 74 MHz (BW = 100 kHz)			-54	dBm
• 74 - 87.5 MHz (BW = 100 kHz)			-36	dBm
• 87.5 - 118 MHz (BW = 100 kHz)			-54	dBm
• 118 - 174 MHz (BW = 100 kHz)			-36	dBm
• 174 - 230 MHz (BW = 100 kHz)			-54	dBm
• 230 - 470 MHz (BW = 100 kHz)			-36	dBm
• 470 - 862 MHz (BW = 100 kHz)			-54	dBm
• 862 - 1000 MHz (BW = 100 kHz)			-36	dBm
• 1000 - 5150 MHz (BW = 1 MHz)			-30	dBm
• 5350 - 5470 MHz (BW = 1 MHz)			-30	dBm
• 5725 - 26000 MHz (BW = 1 MHz)			-30	dBm
RX Characteristics (LDPC enabled)	**Minimum**	**Typical**	**Maximum**	**Unit**
Minimum Input Level (PER ≤ 10%)			-79	dBm
Maximum Input Level (PER ≤ 10%)	-30			dBm
Adjacent Channel Rejection (PER ≤ 10%)	16			dB

Downloaded from Arrow.com.

16.12 DC/RF Characteristics for IEEE 802.11ax (HE80) - 5 GHz

Table 62: DC/RF Characteristics for IEEE 802.11ax (HE80) - 5 GHz

Items	Contents
Specification	IEEE 802.11ax - 5 GHz
Mode	OFDM (OFDMA)
Channel Frequency (Spacing)	5210 to 5290 MHz (80 MHz), 5530 to 5690 MHz (80 MHz), 5775 MHz (80 MHz)
Data Rate	MCS0 – MCS11

16.12.1 High-Rate Condition for IEEE 802.11ax (HE80) - 5 GHz

Normal Condition: 25 °C, VBAT = 3.3V, MCS11 – HE80 mode (1-Antenna).

Table 63: High-Rate Condition for IEEE 802.11ax (HE80) - 5 GHz

Items	Contents			
Current Consumption	**Minimum**	**Typical**	**Maximum**	**Unit**
• Tx Mode (Power setting: 9 dBm)		320	380	mA
• Rx Mode		65	75	mA
TX Characteristics	**Minimum**	**Typical**	**Maximum**	**Unit**
Power Levels	7	9	11	dBm
Spectrum Mask				
• 39 MHz to 41 MHz (0 ~ -20 dBr)	0			dB
• 41 MHz to 80 MHz (-20 ~ -28 dBr)	0			dB
• 80 MHz to 120 MHz (-28 ~ -40 dBr)	0			dB
• 120 MHz to 140 MHz (-40 dBr)	0			dB
Constellation Error (EVM) (Measured at full packet channel estimation)			-35	dB
Frequency Tolerance	-20		20	ppm
Spurious Emissions				
• 30 - 47 MHz (BW = 100 kHz)			-36	dBm
• 47 - 74 MHz (BW = 100 kHz)			-54	dBm
• 74 - 87.5 MHz (BW = 100 kHz)			-36	dBm
• 87.5 - 118 MHz (BW = 100 kHz)			-54	dBm
• 118 - 174 MHz (BW = 100 kHz)			-36	dBm
• 174 - 230 MHz (BW = 100 kHz)			-54	dBm
• 230 - 470 MHz (BW = 100 kHz)			-36	dBm
• 470 - 862 MHz (BW = 100 kHz)			-54	dBm
• 862 - 1000 MHz (BW = 100 kHz)			-36	dBm
• 1000 - 5150 MHz (BW = 1 MHz)			-30	dBm
• 5350 - 5470 MHz (BW = 1 MHz)			-30	dBm
• 5725 - 26000 MHz (BW = 1 MHz)			-30	dBm
RX Characteristics (LDPC enabled)	**Minimum**	**Typical**	**Maximum**	**Unit**
Minimum Input Level (PER ≤ 10%)			-46	dBm
Maximum Input Level (PER ≤ 10%)	-30			dBm

Downloaded from Arrow.com.

Items	Contents			
Adjacent Channel Rejection (PER ≤ 10%)	-14			dB

16.12.2 Low-Rate Condition for IEEE 802.11ax (HE80) - 5 GHz

Normal Condition: 25 °C, VBAT = 3.3V, MCS0 – HE80 mode (1-Antenna).

Table 64: Low-Rate Condition for IEEE 802.11ax (HE80) - 5 GHz

Items	Contents			
Current Consumption	**Minimum**	**Typical**	**Maximum**	**Unit**
• Tx Mode (Power setting: 12 dBm)		390	470	mA
• Rx Mode		65	75	mA
TX Characteristics	**Minimum**	**Typical**	**Maximum**	**Unit**
Power Levels	10	12	14	dBm
Spectrum Mask				
• 39 MHz to 41 MHz (0 ~ -20 dBr)	0			dB
• 41 MHz to 80 MHz (-20 ~ -28 dBr)	0			dB
• 80 MHz to 120 MHz (-28 ~ -40 dBr)	0			dB
• 120 MHz to 140 MHz (-40 dBr)	0			dB
Constellation Error (EVM) (Measured at full packet channel estimation)			-5	dB
Frequency Tolerance	-20		20	ppm
Spurious Emissions				
• 30 - 47 MHz (BW = 100 kHz)			-36	dBm
• 47 - 74 MHz (BW = 100 kHz)			-54	dBm
• 74 - 87.5 MHz (BW = 100 kHz)			-36	dBm
• 87.5 - 118 MHz (BW = 100 kHz)			-54	dBm
• 118 - 174 MHz (BW = 100 kHz)			-36	dBm
• 174 - 230 MHz (BW = 100 kHz)			-54	dBm
• 230 - 470 MHz (BW = 100 kHz)			-36	dBm
• 470 - 862 MHz (BW = 100 kHz)			-54	dBm
• 862 - 1000 MHz (BW = 1 00 kHz)			-36	dBm
• 1000 - 5150 MHz (BW = 1 MHz)			-30	dBm
• 5350 - 5470 MHz (BW = 1 MHz)			-30	dBm
• 5725 - 26000 MHz (BW = 1 MHz)			-30	dBm
RX Characteristics (LDPC enabled)	**Minimum**	**Typical**	**Maximum**	**Unit**
Minimum Input Level (PER ≤ 10%)			-76	dBm
Maximum Input Level (PER ≤ 10%)	-30			dBm
Adjacent Channel Rejection (PER ≤ 10%)	16			dB

Downloaded from Arrow.com.

16.13 DC/RF Characteristics for IEEE 802.11a - 6 GHz

Table 65: DC/RF Characteristics for IEEE 802.11a - 6 GHz

Items	Contents
Specification	IEEE 802.11a - 6 GHz
Mode	OFDM
Channel Frequency (Spacing)	5955 to 7095 MHz (20 MHz)
Data Rate	6, 9, 12, 18, 24 Mbps

16.13.1 High-Rate Condition for IEEE 802.11a - 6 GHz

Normal Condition: 25 °C, VBAT = 3.3V, 24 Mbps mode (1-Antenna).

Table 66: High-Rate Condition for IEEE 802.11a - 6 GHz

Items	Contents			
Current Consumption	**Minimum**	**Typical**	**Maximum**	**Unit**
• Tx Mode (Power setting: 12 dBm)		250	300	mA
• Rx Mode		50	60	mA
TX Characteristics	**Minimum**	**Typical**	**Maximum**	**Unit**
Power Levels	9.5	12	14	dBm
Spectrum Mask Margin				
• 9 MHz to 11 MHz (0 ~ -20 dBr)	0			dB
• 11 MHz to 20 MHz (-20 ~ -28 dBr)	0			dB
• 20 MHz to 30 MHz (-28 ~ -40 dBr)	0			dB
• 30 MHz to 33 MHz (-40 dBr)	0			dB
Constellation Error (EVM)			-16	dB
Frequency Tolerance	-20		20	ppm
Spurious Emissions				
• 30 - 47 MHz (BW = 100 kHz)			-36	dBm
• 47 - 74 MHz (BW = 100 kHz)			-54	dBm
• 74 - 87.5 MHz (BW = 100 kHz)			-36	dBm
• 87.5 - 118 MHz (BW = 100 kHz)			-54	dBm
• 118 - 174 MHz (BW = 100 kHz)			-36	dBm
• 174 - 230 MHz (BW = 100 kHz)			-54	dBm
• 230 - 470 MHz (BW = 100 kHz)			-36	dBm
• 470 - 862 MHz (BW = 100 kHz)			-54	dBm
• 862 - 1000 MHz (BW = 100 kHz)			-36	dBm
• 1000 - 5150 MHz (BW = 1 MHz)			-30	dBm
• 5350 - 5470 MHz (BW = 1 MHz)			-30	dBm
• 5725 - 26000 MHz (BW = 1 MHz)			-30	dBm
RX Characteristics	**Minimum**	**Typical**	**Maximum**	**Unit**
Minimum Input Level (PER ≤ 10%)			-74	dBm
Maximum Input Level (PER ≤ 10%)	-30			dBm
Adjacent Channel Rejection (PER ≤ 10%)	8			dB

Downloaded from Arrow.com.

16.13.2 Low-Rate Condition for IEEE 802.11a - 6 GHz

Normal Condition: 25 °C, VBAT = 3.3V, 6 Mbps mode (1-Antenna)

Table 67: Low-Rate Condition for IEEE 802.11a - 6 GHz

Items	Contents			
Current Consumption	**Minimum**	**Typical**	**Maximum**	**Unit**
• Tx Mode (Power setting: 12 dBm)		250	300	mA
• Rx Mode		50	60	mA
TX Characteristics	**Minimum**	**Typical**	**Maximum**	**Unit**
Power Levels	9.5	12	14	dBm
Spectrum Mask Margin				
• 9 MHz to 11 MHz (0 ~ -20 dBr)	0			dB
• 11 MHz to 20 MHz (-20 ~ -28 dBr)	0			dB
• 20 MHz to 30 MHz (-28 ~ -40 dBr)	0			dB
• 30 MHz to 33 MHz (-40 dBr)	0			dB
Constellation Error (EVM)			-5	dB
Frequency Tolerance	-20		20	ppm
Spurious Emissions				
• 30 - 47 MHz (BW = 100 kHz)			-36	dBm
• 47 - 74 MHz (BW = 100 kHz)			-54	dBm
• 74 - 87.5 MHz (BW = 100 kHz)			-36	dBm
• 87.5 - 118 MHz (BW = 100 kHz)			-54	dBm
• 118 - 174 MHz (BW = 100 kHz)			-36	dBm
• 174 - 230 MHz (BW = 100 kHz)			-54	dBm
• 230 - 470 MHz (BW = 100 kHz)			-36	dBm
• 470 - 862 MHz (BW = 100 kHz)			-54	dBm
• 862 - 1000 MHz (BW = 100 kHz)			-36	dBm
• 1000 - 5150 MHz (BW = 1 MHz)			-30	dBm
• 5350 - 5470 MHz (BW = 1 MHz)			-30	dBm
• 5725 - 26000 MHz (BW = 1 MHz)			-30	dBm
RX Characteristics	**Minimum**	**Typical**	**Maximum**	**Unit**
Minimum Input Level (PER ≤ 10%)			-82	dBm
Maximum Input Level (PER ≤ 10%)	-30			dBm
Adjacent Channel Rejection (PER ≤ 10%)	16			dB

Downloaded from Arrow.com.

16.14 DC/RF Characteristics for IEEE 802.11ax (HE20) - 6 GHz

Table 68: DC/RF Characteristics for IEEE 802.11ax (HE20) - 6 GHz

Items	Contents
Specification	IEEE 802.11ax - 6 GHz
Mode	OFDM (OFDMA)
Channel Frequency (Spacing)	5955 to 7095 MHz (20 MHz)
Data Rate	MCS0 - MCS11

16.14.1 High-Rate Condition for IEEE 802.11ax (HE20) - 6 GHz

Normal Condition: 25 °C, VBAT =3.3V, MCS11 – HE20 mode (1-Antenna).

Table 69: High-Rate Condition for IEEE 802.11ax (HE20) - 6 GHz

Items	Contents			
Current Consumption	**Minimum**	**Typical**	**Maximum**	**Unit**
• Tx Mode (Power setting: 9 dBm)		290	340	mA
• Rx Mode		45	55	mA
TX Characteristics	**Minimum**	**Typical**	**Maximum**	**Unit**
Power Levels	6.5	9	11	dBm
Spectrum Mask Margin				
• 9 MHz to 11 MHz (0 ~ -20 dBr)	0			dB
• 11 MHz to 20 MHz (-20 ~ -28 dBr)	0			dB
• 20 MHz to 30 MHz (-28 ~ -40 dBr)	0			dB
• 30 MHz to 33 MHz (-40 dBr)	0			dB
Constellation Error (EVM) (Measured at full packet channel estimation)			-35	dB
Frequency Tolerance	-20		20	ppm
Spurious Emissions				
• 30 - 47 MHz (BW = 100 kHz)			-36	dBm
• 47 - 74 MHz (BW = 100 kHz)			-54	dBm
• 74 - 87.5 MHz (BW = 100 kHz)			-36	dBm
• 87.5 - 118 MHz (BW = 100 kHz)			-54	dBm
• 118 - 174 MHz (BW = 100 kHz)			-36	dBm
• 174 - 230 MHz (BW = 100 kHz)			-54	dBm
• 230 - 470 MHz (BW = 100 kHz)			-36	dBm
• 470 - 862 MHz (BW = 100 kHz)			-54	dBm
• 862 - 1000 MHz (BW = 100 kHz)			-36	dBm
• 1000 - 5150 MHz (BW = 1 MHz)			-30	dBm
• 5350 - 5470 MHz (BW = 1 MHz)			-30	dBm
• 5725 - 26000 MHz (BW = 1 MHz)			-30	dBm
RX Characteristics (LDPC enabled)	**Minimum**	**Typical**	**Maximum**	**Unit**
Minimum Input Level (PER ≤ 10%)		-58	-52	dBm
Maximum Input Level (PER ≤ 10%)	-30			dBm
Adjacent Channel Rejection (PER ≤ 10%)	-14			dB

Downloaded from Arrow.com.

16.14.2 Low-Rate Condition for IEEE 802.11ax (HE20) - 6 GHz

Normal Condition: 25 °C, VBAT =3.3V, MCS0 – HE20 mode (1-Antenna).

Table 70: Low-Rate Condition for IEEE 802.11ax (HE20) - 6 GHz

Items	Contents			
Current Consumption	**Minimum**	**Typical**	**Maximum**	**Unit**
• Tx Mode (Power setting: 11 dBm)		350	420	mA
• Rx Mode		45	55	mA
TX Characteristics	**Minimum**	**Typical**	**Maximum**	**Unit**
Power Levels	8.5	11	13	dBm
Spectrum Mask Margin				
• 9 MHz to 11 MHz (0 ~ -20 dBr)	0			dB
• 11 MHz to 20 MHz (-20 ~ -28 dBr)	0			dB
• 20 MHz to 30 MHz (-28 ~ -40 dBr)	0			dB
• 30 MHz to 33 MHz (-40 dBr)	0			dB
Constellation Error (EVM) (Measured at full packet channel estimation)			-5	dB
Frequency Tolerance	-20		20	ppm
Spurious Emissions				
• 30 - 47 MHz (BW = 100 kHz)			-36	dBm
• 47 - 74 MHz (BW = 100 kHz)			-54	dBm
• 74 - 87.5 MHz (BW = 100 kHz)			-36	dBm
• 87.5 - 118 MHz (BW = 100 kHz)			-54	dBm
• 118 - 174 MHz (BW = 100 kHz)			-36	dBm
• 174 - 230 MHz (BW = 100 kHz)			-54	dBm
• 230 - 470 MHz (BW = 100 kHz)			-36	dBm
• 470 - 862 MHz (BW = 100 kHz)			-54	dBm
• 862 - 1000 MHz (BW = 100 kHz)			-36	dBm
• 1000 - 5150 MHz (BW = 1 MHz)			-30	dBm
• 5350 - 5470 MHz (BW = 1 MHz)			-30	dBm
• 5725 - 26000 MHz (BW = 1 MHz)			-30	dBm
RX Characteristics (LDPC enabled)	**Minimum**	**Typical**	**Maximum**	**Unit**
Minimum Input Level (PER ≤ 10%)			-82	dBm
Maximum Input Level (PER ≤ 10%)	-30			dBm
Adjacent Channel Rejection (PER ≤ 10%)	16			dB

Downloaded from Arrow.com.

16.15 DC/RF Characteristics for IEEE 802.11ax (HE40) - 6 GHz

Table 71: DC/RF Characteristics for IEEE 802.11ax (HE40) - 6 GHz

Items	Contents
Specification	IEEE 802.11ax - 6 GHz
Mode	OFDM (OFDMA)
Channel Frequency (Spacing)	5965 to 7085 MHz (40 MHz)
Data Rate	MCS0 - MCS11

16.15.1 High-Rate Condition for IEEE 802.11ax (HE40) - 6 GHz

Normal Condition: 25 °C, VBAT = 3.3V, MCS11 – HE40 mode (1-Antenna).

Table 72: High-Rate Condition for IEEE 802.11ax (HE40) - 6 GHz

Items	Contents			
Current Consumption	**Minimum**	**Typical**	**Maximum**	**Unit**
• Tx Mode (Power setting: 9 dBm)		290	350	mA
• Rx Mode		55	65	mA
TX Characteristics	**Minimum**	**Typical**	**Maximum**	**Unit**
Power Levels	6.5	9	11	dBm
Spectrum Mask				
• 19 MHz to 21 MHz (0 ~ -20 dBr)	0			dB
• 21 MHz to 40 MHz (-20 ~ -28 dBr)	0			dB
• 40 MHz to 60 MHz (-28 ~ -40 dBr)	0			dB
• 60 MHz to 80 MHz (-40 dBr)	0			dB
Constellation Error (EVM) (Measured at full packet channel estimation)			-35	dB
Frequency Tolerance	-20		20	ppm
Spurious Emissions				
30 - 47 MHz (BW = 100 kHz)			-36	dBm
47 - 74 MHz (BW = 100 kHz)			-54	dBm
74 - 87.5 MHz (BW = 100 kHz)			-36	dBm
87.5 - 118 MHz (BW = 100 kHz)			-54	dBm
118 - 174 MHz (BW = 100 kHz)			-36	dBm
174 - 230 MHz (BW = 100 kHz)			-54	dBm
230 - 470 MHz (BW = 100 kHz)			-36	dBm
470 - 862 MHz (BW = 100 kHz)			-54	dBm
862 - 1000 MHz (BW = 100 kHz)			-36	dBm
1000 - 5150 MHz (BW = 1 MHz)			-30	dBm
5350 - 5470 MHz (BW = 1 MHz)			-30	dBm
5725 - 26000 MHz (BW = 1 MHz)			-30	dBm
RX Characteristics (LDPC enabled)	**Minimum**	**Typical**	**Maximum**	**Unit**
Minimum Input Level (PER ≤ 10%)		-56	-49	dBm
Maximum Input Level (PER ≤ 10%)	-30			dBm
Adjacent Channel Rejection (PER ≤ 10%)	-14			dB

Downloaded from Arrow.com.

16.15.2 Low-Rate Condition for IEEE 802.11ax (HE40) - 6 GHz

Normal Condition: 25 °C, VBAT = 3.3V, MCS0 – HE40 mode (1-Antenna).

Table 73: Low-Rate Condition for IEEE 802.11ax (HE40) - 6 GHz

Items	Contents			
Current Consumption	**Minimum**	**Typical**	**Maximum**	**Unit**
• Tx Mode (Power setting: 11 dBm)		350	420	mA
• Rx Mode		55	65	mA
TX Characteristics	**Minimum**	**Typical**	**Maximum**	**Unit**
Power Levels	8.5	11	13	dBm
Spectrum Mask				
• 19 MHz to 21 MHz (0 ~ -20 dBr)	0			dB
• 21 MHz to 40 MHz (-20 ~ -28 dBr)	0			dB
• 40 MHz to 60 MHz (-28 ~ -40 dBr)	0			dB
• 60 MHz to 80 MHz (-40 dBr)	0			dB
Constellation Error (EVM) (Measured at full packet channel estimation)			-5	dB
Frequency Tolerance	-20		20	ppm
Spurious Emissions				
• 30 - 47 MHz (BW = 100 kHz)			-36	dBm
• 47 - 74 MHz (BW = 100 kHz)			-54	dBm
• 74 - 87.5 MHz (BW = 100 kHz)			-36	dBm
• 87.5 - 118 MHz (BW = 100 kHz)			-54	dBm
• 118 - 174 MHz (BW = 100 kHz)			-36	dBm
• 174 - 230 MHz (BW = 100 kHz)			-54	dBm
• 230 - 470 MHz (BW = 100 kHz)			-36	dBm
• 470 - 862 MHz (BW = 100 kHz)			-54	dBm
• 862 - 1000 MHz (BW = 100 kHz)			-36	dBm
• 1000 - 5150 MHz (BW = 1 MHz)			-30	dBm
• 5350 - 5470 MHz (BW = 1 MHz)			-30	dBm
• 5725 - 26000 MHz (BW = 1 MHz)			-30	dBm
RX Characteristics (LDPC enabled)	**Minimum**	**Typical**	**Maximum**	**Unit**
Minimum Input Level (PER ≤ 10%)			-79	dBm
Maximum Input Level (PER ≤ 10%)	-30			dBm
Adjacent Channel Rejection (PER ≤ 10%)	16			dB

Downloaded from Arrow.com.

16.16 DC/RF Characteristics for IEEE 802.11ax (HE80) - 6 GHz

Table 74: DC/RF Characteristics for IEEE 802.11ax (HE80) - 6 GHz

Items	Contents
Specification	IEEE 802.11ax - 6 GHz
Mode	OFDM (OFDMA)
Channel Frequency (Spacing)	5985 to 7025 MHz (80 MHz)
Data Rate	MCS0 – MCS11

16.16.1 High-Rate Condition for IEEE 802.11ax (HE80) - 6 GHz

Normal Condition: 25 °C, VBAT = 3.3V, MCS11 - HE80 mode (1-Antenna).

Table 75: High-Rate Condition for IEEE 802.11ax (HE80) - 6 GHz

Items	Contents			
Current Consumption	**Minimum**	**Typical**	**Maximum**	**Unit**
• Tx Mode (Power setting: 9 dBm)		310	360	mA
• Rx Mode		60	70	mA
TX Characteristics	**Minimum**	**Typical**	**Maximum**	**Unit**
Power Levels	6.5	9	11	dBm
Spectrum Mask				
• 39 MHz to 41 MHz (0 ~ -20 dBr)	0			dB
• 41 MHz to 80 MHz (-20 ~ -28 dBr)	0			dB
• 80 MHz to 120 MHz (-28 ~ -40 dBr)	0			dB
• 120 MHz to 140 MHz (-40 dBr)	0			dB
Constellation Error (EVM) (Measured at full packet channel estimation)			-35	dB
Frequency Tolerance	-20		20	ppm
Spurious Emissions				
• 30 - 47 MHz (BW = 100 kHz)			-36	dBm
• 47 - 74 MHz (BW = 100 kHz)			-54	dBm
• 74 - 87.5 MHz (BW = 100 kHz)			-36	dBm
• 87.5 - 118 MHz (BW = 100 kHz)			-54	dBm
• 118 - 174 MHz (BW = 100 kHz)			-36	dBm
• 174 - 230 MHz (BW = 100 kHz)			-54	dBm
• 230 - 470 MHz (BW = 100 kHz)			-36	dBm
• 470 - 862 MHz (BW = 100 kHz)			-54	dBm
• 862 - 1000 MHz (BW = 100 kHz)			-36	dBm
• 1000 - 5150 MHz (BW = 1 MHz)			-30	dBm
• 5350 - 5470 MHz (BW = 1 MHz)			-30	dBm
• 5725 - 26000 MHz (BW = 1 MHz)			-30	dBm
RX Characteristics (LDPC enabled)	**Minimum**	**Typical**	**Maximum**	**Unit**
Minimum Input Level (PER ≤ 10%)		-54	-46	dBm
Maximum Input Level (PER ≤ 10%)	-30			dBm
Adjacent Channel Rejection (PER ≤ 10%)	-14			dB

Downloaded from Arrow.com.

16.16.2 Low-Rate Condition for IEEE 802.11ax (HE80) - 6 GHz

Normal Condition: 25 °C, VBAT = 3.3V, MCS0 - HE80 mode (1-Antenna).

Table 76: Low-Rate Condition for IEEE 802.11ax (HE80) - 6 GHz

Items	Contents			
Current Consumption	**Minimum**	**Typical**	**Maximum**	**Unit**
• Tx Mode (Power setting: 11 dBm)		370	450	mA
• Rx Mode		60	70	mA
TX Characteristics	**Minimum**	**Typical**	**Maximum**	**Unit**
Power Levels	8.5	11	13	dBm
Spectrum Mask				
• 39 MHz to 41 MHz (0 ~ -20 dBr)	0			dB
• 41 MHz to 80 MHz (-20 ~ -28 dBr)	0			dB
• 80 MHz to 120 MHz (-28 ~ -40 dBr)	0			dB
• 120 MHz to 140 MHz (-40 dBr)	0			dB
Constellation Error (EVM) (Measured at full packet channel estimation)			-5	dB
Frequency Tolerance	-20		20	ppm
Spurious Emissions				
• 30 - 47 MHz (BW = 100 kHz)			-36	dBm
• 47 - 74 MHz (BW = 100 kHz)			-54	dBm
• 74 - 87.5 MHz (BW = 100 kHz)			-36	dBm
• 87.5 - 118 MHz (BW = 100 kHz)			-54	dBm
• 118 - 174 MHz (BW = 100 kHz)			-36	dBm
• 174 - 230 MHz (BW = 100 kHz)			-54	dBm
• 230 - 470 MHz (BW = 100 kHz)			-36	dBm
• 470 - 862 MHz (BW = 100 kHz)			-54	dBm
• 862 - 1000 MHz (BW = 100 kHz)			-36	dBm
• 1000 - 5150 MHz (BW = 1 MHz)			-30	dBm
• 5350 - 5470 MHz (BW = 1 MHz)			-30	dBm
• 5725 - 26000 MHz (BW = 1 MHz)			-30	dBm
RX Characteristics (LDPC enabled)	**Minimum**	**Typical**	**Maximum**	**Unit**
Minimum Input Level (PER ≤ 10%)			-76	dBm
Maximum Input Level (PER ≤ 10%)	-30			dBm
Adjacent Channel Rejection (PER ≤ 10%)	16			dB

Downloaded from Arrow.com.

16.17 DC/RF Characteristics for Bluetooth

Normal conditions: 25 °C, VBAT = 3.3V

Table 77: DC/RF Characteristics for Bluetooth

Items	Contents			
Bluetooth Specification (Power Class)	Version 5.3 (Class 1.5)			
Channel Frequency (Spacing)	2402 to 2480 MHz (1 MHz)			
Current Consumption	**Minimum**	**Typical**	**Maximum**	**Unit**
• DH5 Packet 50% Rx/Tx slot duty cycle		34	45	mA
• 2DH5 Packet 50% Rx/Tx slot duty cycle		35	45	mA
• 3DH5 Packet 50% Rx/Tx slot duty cycle		36	45	mA
TX Characteristics	**Minimum**	**Typical**	**Maximum**	**Unit**
Output Power (at DH5)	5	8	10.5	dBm
Output Power (at 2DH5, 3DH5)	1	4	6.5	
Frequency Range	2402		2480	MHz
20 dB bandwidth			1	MHz
Adjacent Channel Power				
• [M-N] = 2			-20	dBm
• [M-N] ≥ 3			-40	dBm
Modulation Characteristics				
• Modulation $\Delta f1_{avg}$	140		175	kHz
• Modulation $\Delta f2_{max}$	115			kHz
• Modulation $\Delta f2_{avg}$ / $\Delta f1_{avg}$	0.8			
Carrier Frequency Drift				
• 1slot	-25		+25	kHz
• 3slot / 5slot	-40		+40	kHz
• Maximum drift rate	-20		+20	kHz/50µs
EDR Relative Power	-4		+1	dB
EDR Carrier Frequency Stability and Modulation Accuracy				
• ωi	-75		+75	kHz
• ωi+ωo	-75		+75	kHz
• ωo	-10		+10	kHz
• RMS DEVM (DQPSK)			20	%
• Peak DEVM (DQPSK)			35	%
• 99% DEVM (DQPSK)			30	%
• RMS DEVM (8DPSK)			13	%
• Peak DEVM (8DPSK)			25	%
• 99% DEVM (8DPSK)			20	%
Spurious Emissions				
• 30 - 47 MHz (BW = 100 kHz)			-36	dBm
• 47 - 74 MHz (BW = 100 kHz)			-54	dBm
• 74 - 87.5 MHz (BW = 100 kHz)			-36	dBm
• 87.5 - 118 MHz (BW = 100 kHz)			-54	dBm
• 118 - 174 MHz (BW = 100 kHz)			-36	dBm
• 174 - 230 MHz (BW = 100 kHz)			-54	dBm
• 230 - 470 MHz (BW = 100 kHz)			-36	dBm
• 470 - 862 MHz (BW = 100 kHz)			-54	dBm
• 862 - 1000 MHz (BW = 100 kHz)			-36	dBm
• 1000 - 12750 MHz (BW = 1 MHz)			-30	dBm

Downloaded from Arrow.com.

Items	Contents			
RX Characteristics	**Minimum**	**Typical**	**Maximum**	**Unit**
BR (DFSK) Sensitivity (BER < 0.1%)		-90	-70	dBm
Maximum Input Level (BER < 0.1%)	-20			dBm
EDR (8DPSK) Sensitivity (BER ≤ 0.007%)		-87	-70	dBm

Adjacent Channel Power: Up to three spurious responses within Bluetooth limits are allowed.

Downloaded from Arrow.com.

16.18 DC/RF Characteristics for Bluetooth Low Energy

Normal Conditions: 25 °C, VBAT = 3.3V, 1Mbps

Table 78: DC/RF Characteristics for BLE

Items	Contents			
Bluetooth Specification (Power Class)	Version 5.3 (LE)			
Channel Frequency (Spacing)	2402 to 2480 MHz (2 MHz)			
Number of RF Channel	40			
Current Consumption	**Minimum**	**Typical**	**Maximum**	**Unit**
• Tx Mode		26	40	mA
• Rx Mode		12	15	mA
Item/Condition	**Minimum**	**Typical**	**Maximum**	**Unit**
Center Frequency	2402		2480	MHz
Channel Spacing		2		MHz
Number of RF channel		40		
Output Power for US	5	8	10.5	dBm
Output Power for EU/JP	0.5	3.5	6	dBm
Modulation Characteristics				
• Δf1avg	225		275	kHz
• Δf2max (at 99.9%)	185			kHz
• Δf2avg / Δf1avg	0.8			
Carrier Frequency Offset and Drift				
• Frequency offset (f_n); n = 0,1, 2, 3…k	-150		150	kHz
• Frequency drift ($\|f_0-f_n\|$); n = 2, 3, 4…k			50	kHz
Drift Rate				
• $\|f_1 - f_0\|$			23	kHz
• $\|f_n-f_{n-5}\|$; n = 6, 7, 8... k			20	kHz
Spurious Emissions				
• 30 - 47 MHz (BW = 100 kHz)			-36	dBm
• 47 - 74 MHz (BW = 100 kHz)			-54	dBm
• 74 - 87.5 MHz (BW = 100 kHz)			-36	dBm
• 87.5 - 118 MHz (BW = 100 kHz)			-54	dBm
• 118 - 174 MHz (BW = 100 kHz)			-36	dBm
• 174 - 230 MHz (BW = 100 kHz)			-54	dBm
• 230 - 470 MHz (BW = 100 kHz)			-36	dBm
• 470 - 862 MHz (BW = 100 kHz)			-54	dBm
• 862 - 1000 MHz (BW = 100 kHz)			-36	dBm
• 1000 - 12750 MHz (BW = 1 MHz)			-30	dBm
RX Characteristics	**Minimum**	**Typical**	**Maximum**	**Unit**
Receiver Sensitivity (PER < 30.8%)		-96	-70	dBm
Maximum Input Signal Level (PER < 30.8%)	-10			dBm
PER Report Integrity (-30 dBm input)	50		65.4	%

Downloaded from Arrow.com.

17 Land Pattern

Figure 27 shows the top view of Type 2EA land pattern.

Figure 27: Land Pattern - Top View

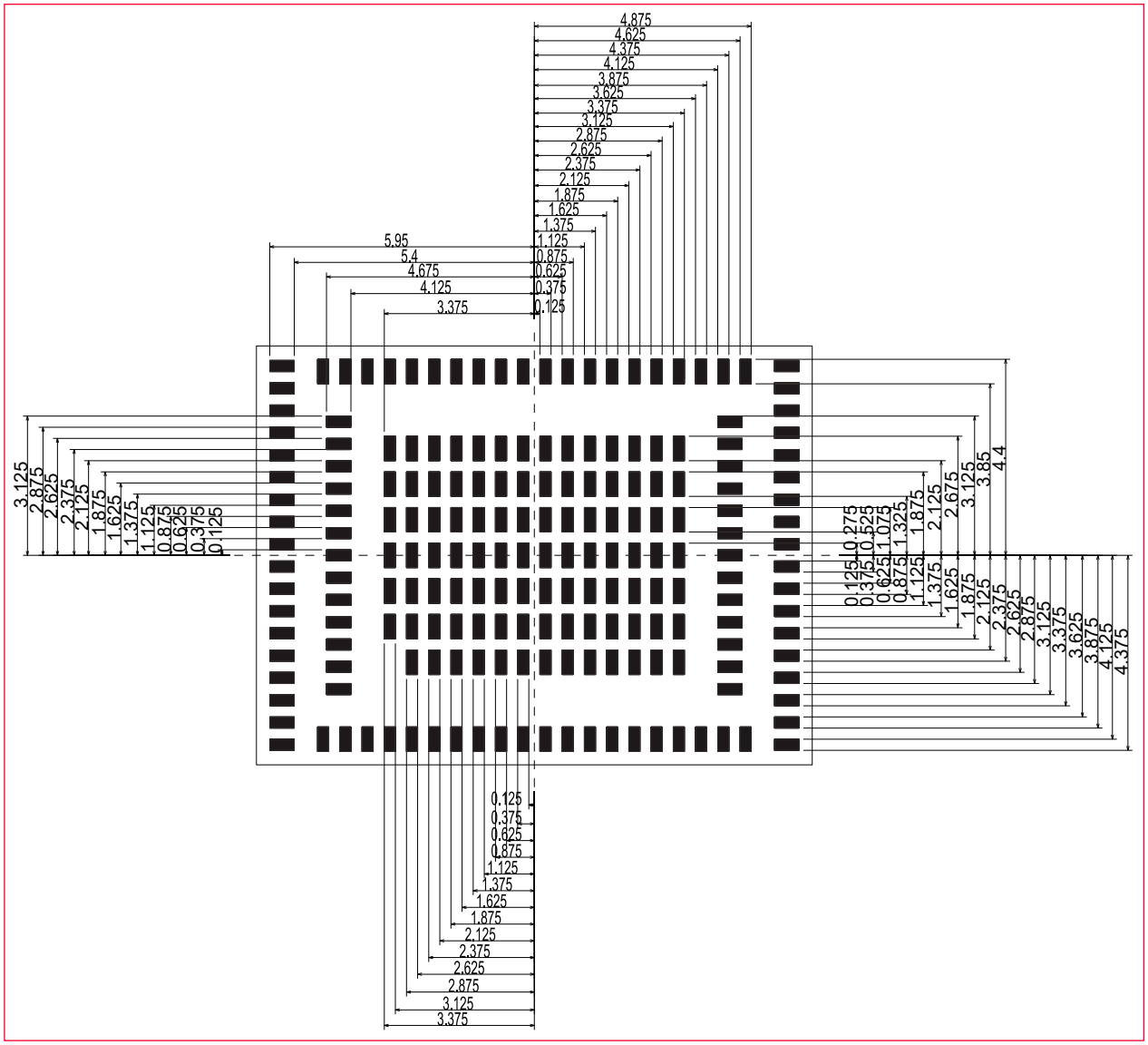

Downloaded from Arrow.com.

18 Tape And Reel Packing

This section describes the tape and reel packing, i.e., the dimensions of the plastic tape, reel and taping diagrams.

18.1 Dimensions of Tape (Plastic Tape)

Figure 28 shows the dimensions of the plastic tape.

Figure 28: Dimensions of Tape (Unit: mm)

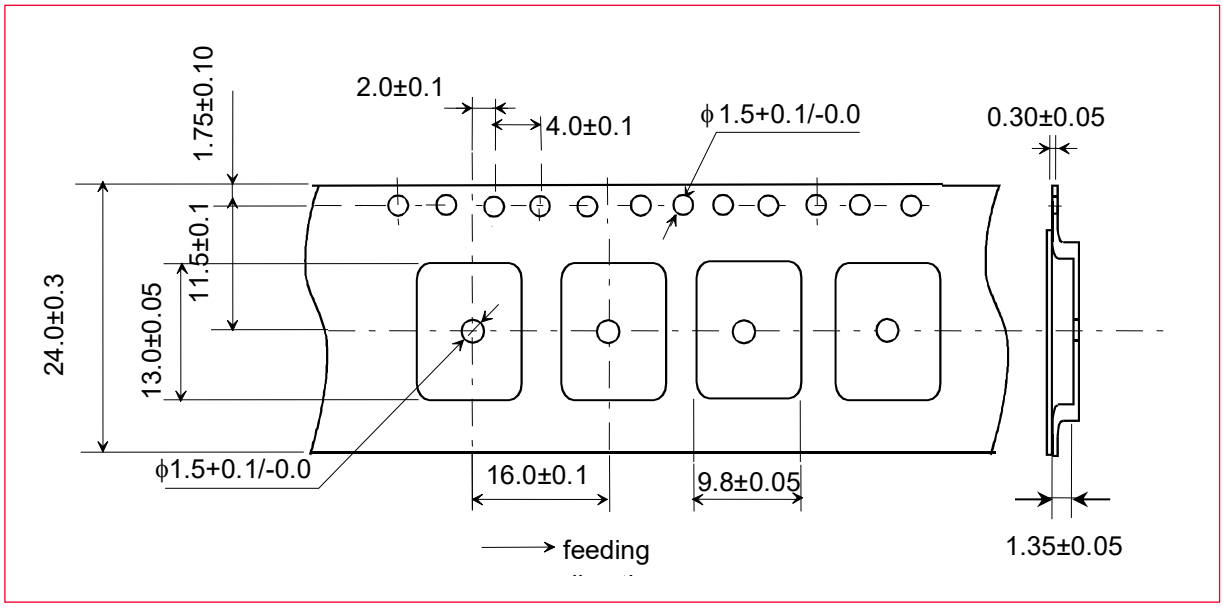

Downloaded from Arrow.com.

18.2 Dimensions of Reel

Figure 29 shows the dimensions of reel.

Figure 29: Dimensions of Reel (Unit: mm)

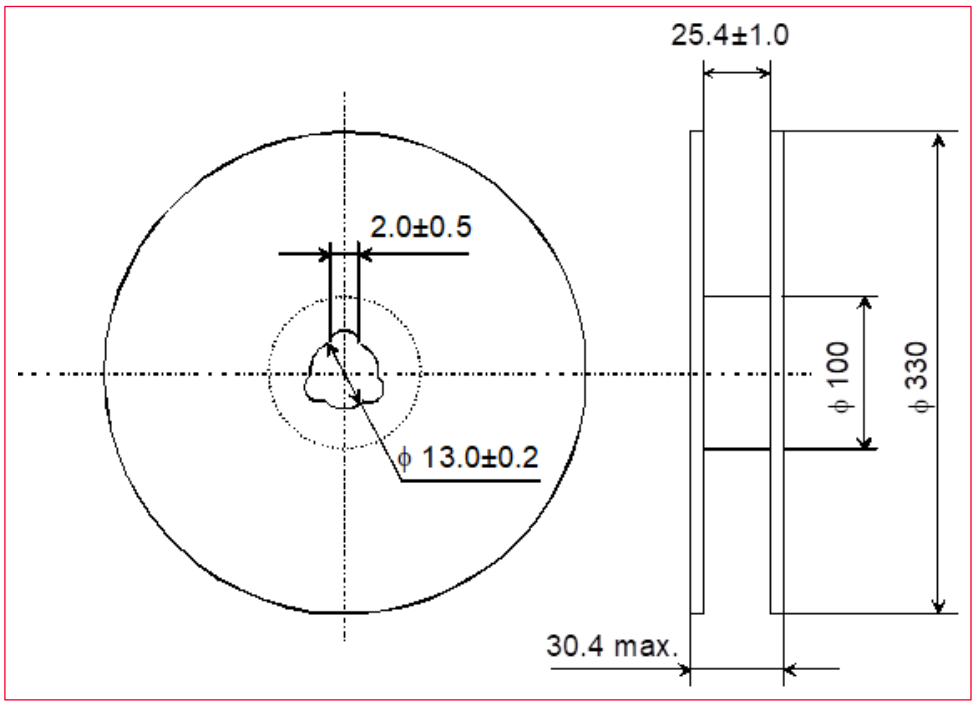

Downloaded from Arrow.com.

18.3 Taping Diagrams

Figure 30 shows the taping diagrams.

Figure 30: Taping Diagrams

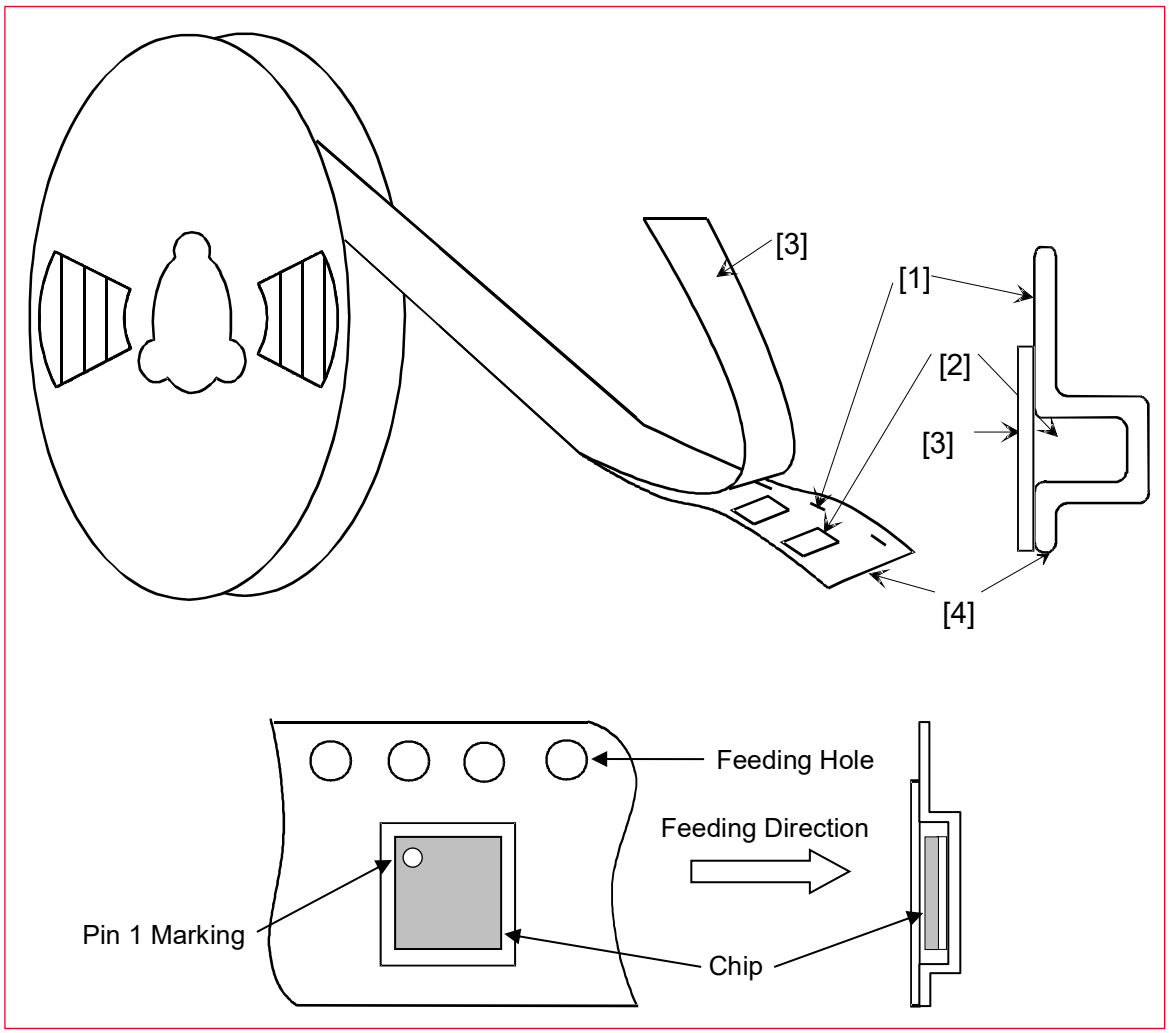

Table 79 describes the taping specifications.

Table 79: Taping Specifications

Mark	Description
1	Feeding Hole: As specified in Dimensions of Tape (Plastic Tape)
2	Hole for chip: As specified in Dimensions of Tape (Plastic Tape)
3	Cover tape: 62 µm in thickness
4	Base tape: As specified in Dimensions of Tape (Plastic Tape)

Downloaded from Arrow.com.

18.4 Leader and Tail Tape

Figure 31 shows the leader and tail tape.

Figure 31: Leader and Tail Tape

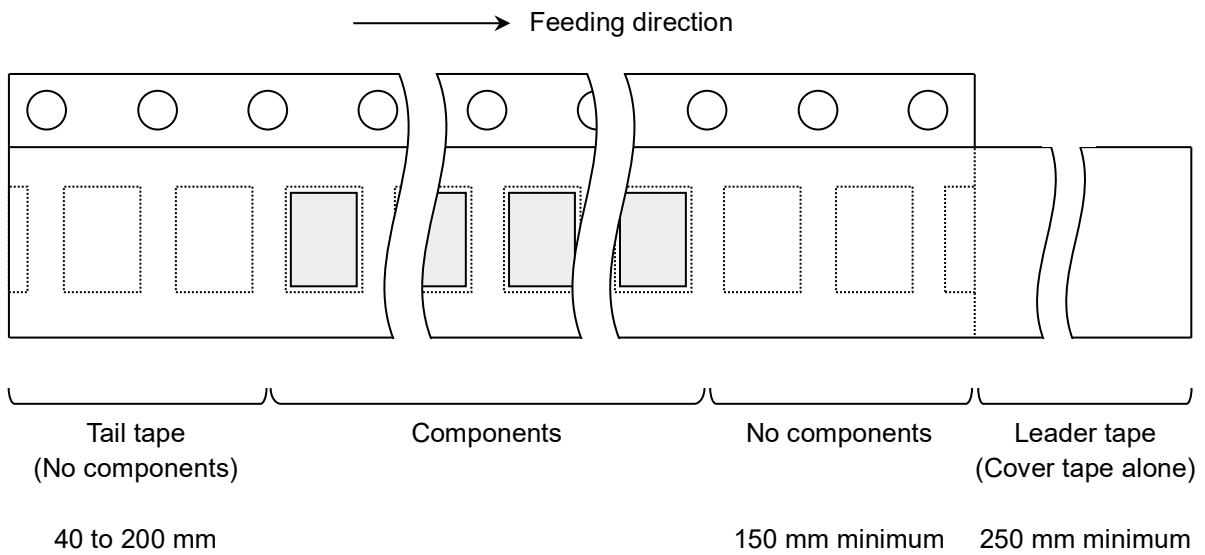

- The tape for chips is wound clockwise, the feeding holes to the right side as the tape is pulled toward the user.
- The cover tape and base tape are not adhered at no components area for 250 mm minimum.
- Tear off strength against pulling of cover tape: 5 N minimum.
- Packaging unit: 1000 pcs/reel
- Material
  - Base tape: Plastic
  - Reel: Plastic
- Cover tape, cavity tape and reel are made the anti-static processing.
- Peeling of force: 1.1 N maximum in the direction of peeling as shown below.

Downloaded from Arrow.com.

Figure 32 shows the peeling off force.

Figure 32: Peeling Off Force

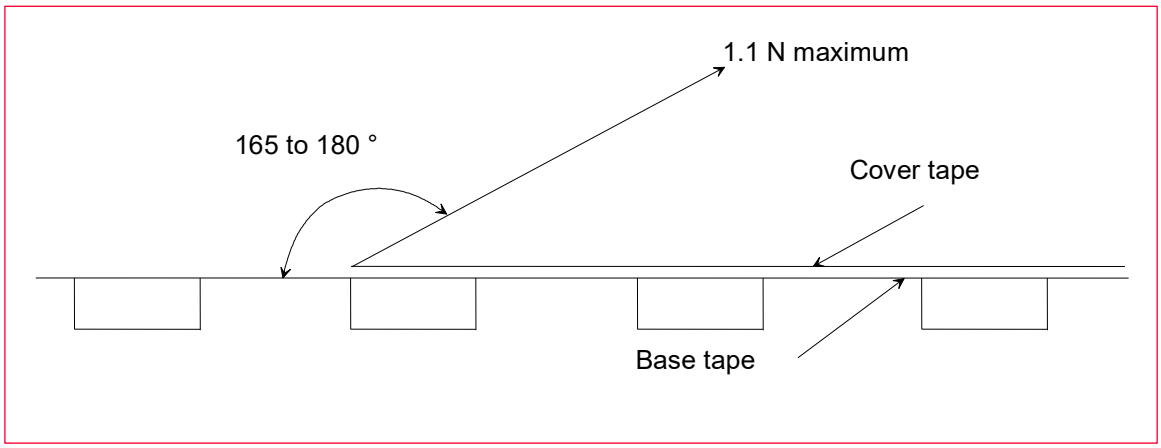

18.5 Humidity Proof Packaging

Figure 33 shows the humidity proof packaging.

Figure 33: Humidity Proof Packaging

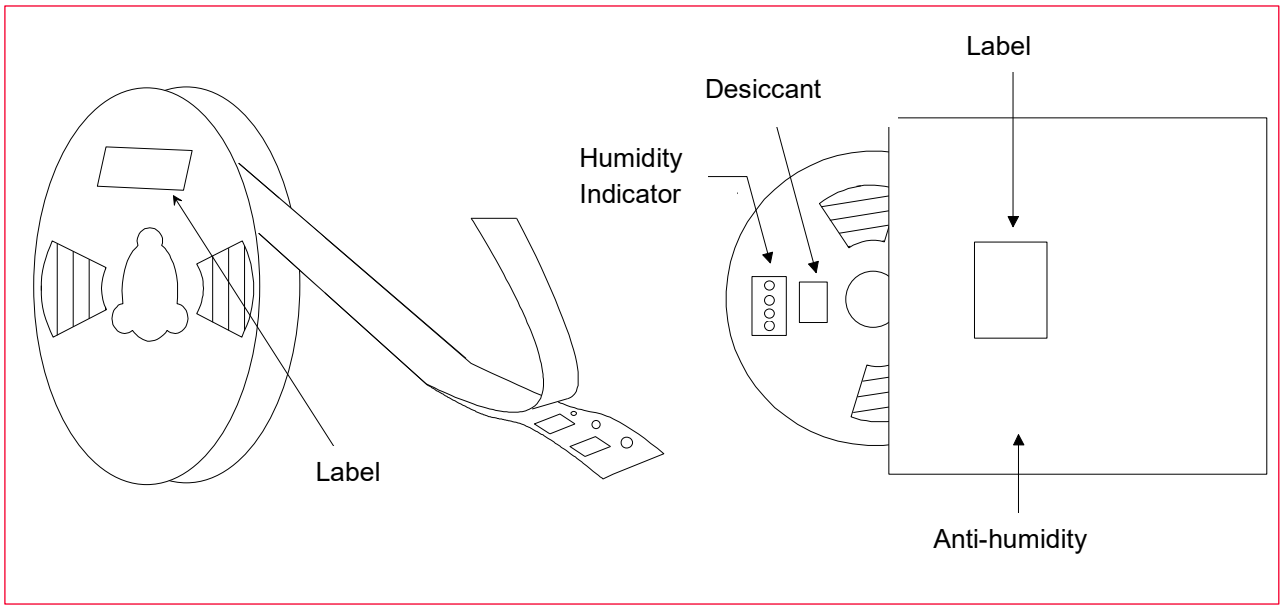

Tape and reel must be sealed with the anti-humidity plastic bag. The bag contains the desiccant and the humidity indicator.

Downloaded from Arrow.com.

19 Notice

19.1 Storage Conditions

Please use this product within 6 months after receipt.

- The product must be stored without opening the packing under the ambient temperature from 5 to 35 °C and humidity from 20 ~ 70 %RH.

	Packing materials, in particular, may be deformed at the temperature over 40 °C

- The solderability of the product left idle for more than 6 months after receipt needs to be confirmed before it is used.
- The product must be stored in noncorrosive gas (Cl_2, NH_3, SO_2, NO_X, etc.).
- Any excess mechanical shock including, but not limited to, sticking the packing materials by sharp object, and dropping the product, must not be applied as that will damage the packing materials.

This product is applicable to MSL3 (Based on JEDEC Standard J-STD-020)

- After the packing is opened, the product must be stored at <30 °C / <60 %RH and the product *should be* used within 168 hours after opening.
- When the color of the indicator in the packing is changed, the product *should be* baked before soldering.
  - **Baking condition:** 125 +5/-0 °C, 24 hours, 1 time

	The products must be baked on the heat-resistant tray because the material (Base Tape, Reel Tape and Cover Tape) is not heat-resistant.

19.2 Handling Conditions

Be careful while handling or transporting products because excessive stress or mechanical shock may break the products.

Handle with care if you suspect that products may have cracks or damages on their terminals. If there is any such damage, the characteristics of products may change. *Do not touch* products with bare hands as that may cause poor solderability and cause damage by static electrical charge.

19.3 Standard PCB Design (Land Pattern and Dimensions)

All the ground terminals should be connected to the ground patterns. Furthermore, the ground pattern should be provided between IN and OUT terminals. Please refer to the specifications for the standard land dimensions.

The recommended land pattern and dimensions should be as per Murata's standard. The characteristics of products may vary depending on the pattern drawing method, grounding method, land dimensions, land forming method of the NC terminals and the PCB material and thickness. Therefore, be sure to verify the characteristics in the actual set.

Downloaded from Arrow.com.

When using non-standard lands, contact Murata in advance.

19.4 Notice for Chip Placer

When placing products on the PCB, products may be stressed and broken by uneven forces from a worn-out chucking locating claw or a suction nozzle. To prevent products from damages, be sure to follow the specifications for the maintenance of the chip placer being used. For the positioning of products on the PCB, be aware that mechanical chucking may damage products.

19.5 Soldering Conditions

The recommendation conditions of soldering are as in **Figure 34**.

Soldering must be carried out by the above-mentioned conditions to prevent products damage. Set up the highest temperature of reflow within 260 °C. Contact Murata before use concerning other soldering conditions.

Figure 34: Reflow Soldering Standard Conditions (Example)

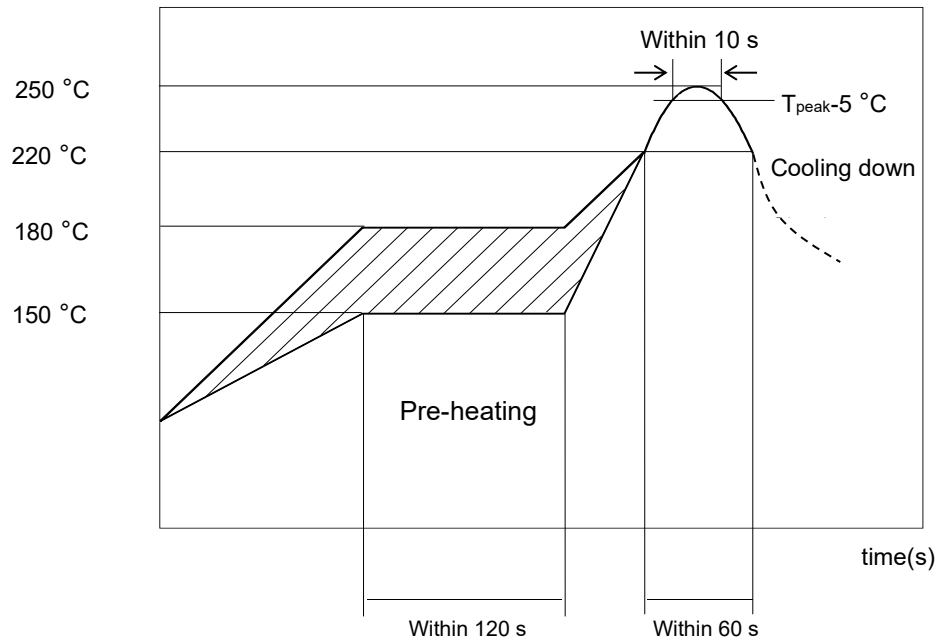

Please use the reflow within 2 times.
Use rosin type flux or weakly active flux with a chlorine content of 0.2 wt. % or less.

Downloaded from Arrow.com.

19.6 Cleaning

Since this Product is Moisture Sensitive, cleaning is not recommended. If any cleaning process is done the customer is responsible for any issues or failures caused such process.

19.7 Operational Environment Conditions

Murata products are designed to work for electronic products under normal environmental conditions (ambient temperature, humidity, and pressure). Therefore, there is no problem in using the products under the above-mentioned conditions. However, using the products under the following circumstances may damage products and cause electricity leakage and abnormal temperature may occur:

- In atmosphere containing corrosive gas (Cl_2, NH_3, SO_X, NO_X etc.).
- In atmosphere containing combustible and volatile gases.
- Dusty place.
- Direct sunlight place.
- Water splashing place.
- Humid place where water condenses.
- Freezing place.

If there is any chance of using the products under the conditions listed above, consult with Murata before actual use.

Do not apply static electricity or excessive voltage while assembling and measuring the products, as it might be a cause of degradation or destruction to apply static electricity to products.

19.8 Input Power Capacity

Products shall be used in the input power capacity as specified in this specification.

Inform Murata beforehand, in case the components are used beyond such input power capacity range.

Downloaded from Arrow.com.

20 Precondition to Use Our Products

PLEASE READ THIS NOTICE BEFORE USING OUR PRODUCTS.

Please make sure that your product has been evaluated and confirmed from the aspect of the fitness for the specifications of our product when our product is mounted to your product.

All the items and parameters in this product specification/datasheet/catalog have been prescribed on the premise that our product is used for the purpose, under the condition and in the environment specified in this specification. You are requested not to use our product deviating from the condition and the environment specified in this specification.

Please note that the only warranty that we provide regarding the products is its conformance to the specifications provided herein. Accordingly, we shall not be responsible for any defects in products or equipment incorporating such products, which are caused under the conditions other than those specified in this specification.

WE HEREBY DISCLAIM ALL OTHER WARRANTIES REGARDING THE PRODUCTS, EXPRESS OR IMPLIED, INCLUDING WITHOUT LIMITATION ANY WARRANTY OF FITNESS FOR A PARTICULAR PURPOSE, THAT THEY ARE DEFECT-FREE, OR AGAINST INFRINGEMENT OF INTELLECTUAL PROPERTY RIGHTS.

You agree that you will use any and all software or program code (including but not limited to firmware, and radio configuration files) we may provide or to be embedded into our product ("Software") provided that you use the Software bundled with our product. YOU AGREE THAT THE SOFTWARE SHALL BE PROVIDED TO YOU "AS IS" BASIS, MURATA MAKES NO REPRESENTATIONS OR WARRANTIES THAT THE SOFTWARE IS ERROR-FREE OR WILL OPERATE WITHOUT INTERRUPTION. AND MORE, MURATA MAKES NO REPRESENTATIONS OR WARRANTIES OF ANY KIND WHETHER EXPRESS OR IMPLIED WITH RESPECT TO THE SOFTWARE. MURATA EXPRESSLY DISCLAIM ANY AND ALL WARRANTIES OR CONDITIONS OF MERCHANTABILITY, FITNESS FOR A PARTICULAR PURPOSE NOR THE WARRANTY OF TITLE OR NON-INFRINGEMENT OF INTELLECTUAL PROPERTY RIGHTS.

You shall indemnify and hold harmless us, our affiliates, and our licensor from and against any and all claims, costs, expenses and liabilities (including attorney's fees), which arise in connection with the using the Software.

The product shall not be used in any application listed below which requires especially high reliability for the prevention of such defect as may directly cause damage to the third party's life, body or property. You acknowledge and agree that, if you use our products in such applications, we will not be responsible for any failure to meet such requirements. Furthermore, YOU AGREE TO INDEMNIFY AND DEFEND US AND OUR AFFILIATES AGAINST ALL CLAIMS, DAMAGES, COSTS, AND EXPENSES THAT MAY BE INCURRED, INCLUDING WITHOUT LIMITATION, ATTORNEY FEES AND COSTS, DUE TO THE USE OF OUR PRODUCTS AND THE SOFTWARE IN SUCH APPLICATIONS.

- Aircraft equipment.
- Aerospace equipment.
- Undersea equipment.
- Power plant control equipment.
- Medical equipment.
- Traffic signal equipment.

Downloaded from Arrow.com.

- Burning / explosion control equipment.
- Disaster prevention / crime prevention equipment.
- Transportation equipment (vehicles, trains, ships, elevator, etc.).
- Application of similar complexity and/ or reliability requirements to the applications listed in the above.
- We expressly prohibit you from analyzing, breaking, reverse-engineering, remodeling altering, and reproducing our product. Our product cannot be used for the product which is prohibited from being manufactured, used, and sold by the regulations and laws in the world.

Even in the unlikely event that an abnormality or malfunction occurs in this product under operating conditions that conform to the specifications, be sure to add an appropriate fail-safe function to the system to prevent secondary accidents.

We do not warrant or represent that any license, either express or implied, is granted under any our patent right, copyright, mask work right, or our other intellectual property right relating to any combination, machine, or process in which our products or services are used. Information provided by us regarding third-party products or services does not constitute a license from us to use such products or services or a warranty or endorsement thereof. Use of such information may require a license from a third party under the patents or other intellectual property of the third party, or a license from us under our patents or other intellectual property.

Please do not use our products, our technical information and other data provided by us for the purpose of developing of mass-destruction weapons and the purpose of military use.

Moreover, you must comply with "foreign exchange and foreign trade law", the "U.S. export administration regulations", etc.

Please note that we may discontinue the manufacture of our products, due to reasons such as end of supply of materials and/or components from our suppliers.

By signing on specification sheet or approval sheet, you acknowledge that you are the legal representative for your company and that you understand and accept the validity of the contents herein. When you are not able to return the signed version of specification sheet or approval sheet within 30 days from receiving date of specification sheet or approval sheet, it shall be deemed to be your consent on the content of specification sheet or approval sheet. Customer acknowledges that engineering samples may deviate from specifications and may contain defects due to their development status. We reject any liability or product warranty for engineering samples. In particular we disclaim liability for damages caused by

- The use of the engineering sample other than for evaluation purposes, particularly the installation or integration in the product to be sold by you,
- Deviation or lapse in function of engineering sample,
- Improper use of engineering samples.
- We disclaim any liability for consequential and incidental damages.

This Precondition to Use Our Products stipulated in this datasheet can only be modified, amended or altered by documents that explicitly reflect the mutual consent of both parties (including instances where one party explicitly indicates its acceptance of terms provided by the other party through click-through agreements).

If you can’t agree with the above contents, please contact sales.

Downloaded from Arrow.com.

Revision History

Revision	Date	Changed Item	Comment
1	2021.08.20	First issue	
2 (A)	2021.09.13	3. Block Diagram	• Updated
3 (B)	2021.09.24	2. Key Feature 5. Operating Condition 7. Dimensions, Markings and Terminal Configurations 8. Modules Pin Descriptions 9. Reference Peripheral Circuit 11.1. Power On Sequence 11.2. Power Off Sequence 12.1. Bluetooth UART Timing 12.3. Bluetooth I2S Interface Timing	• Updated • Changed Operating Temperature • Updated • Updated • Updated • Updated and Revised • Removed • Corrected • Corrected
4 (C)	2021.12.14	2. Key Feature 5. Operating Condition 10. Strapping Options 11. I/O Status	• Updated • Added Specification Temperature • Added • Added
5 (D)	2022.04.05	Cover Page 1. Scope 14. Electrical Characteristics 16. Tape and Reel Packing	• Updated Bluetooth version • Updated Bluetooth version • Updated Tx Power Level and etc. • Updated Dimensions of Tape (Plastic Tape)
6 (E)	2022.12.10	2. Key Features 3. Block Diagram 9. Reference Peripheral Circuit 14. Electorical Characteristics	• Updated information. • Created section 'Ordering Information'. • Moved section to HW app note. • Renamed section. Updated to new format
7 (F)	2023.06.08	2. Key Features 3 Ordering Information 6.1 Module Pin Layout (Top View) 6.2 Pin Descriptions 8 Operating Condition 11 I/O State 13.4 WLAN SDIO Timing 13.5 PCI Express Interface Parameters 14. Electrical Characteristics 16 Radio Regulatory Certification by Country for LBEE5XV2EA	• Updated information. • Updated information. • Updated pin name following IC datasheet • Updated pin name following IC datasheet • Added 'Peak Current' • Updated information. • Added • Added • Updated information. • Added
8 (G)	2023.08.10	2. Key Features 5. Certification Information 15. Electrical Characteristics 16 Radio Regulatory Certification by Country for LBEE5XV2EA	• Updated and corrected • Added • Added Low Rate Characteristics on modulation mode, modified the current consumption data • Added Information of Canada and Europe

Downloaded from Arrow.com.

Revision	Date	Changed Item	Comment
9 (H)	2024.06.13	7 Module Pin Descriptions 15. Electrical Characteristics 17. Radio Regulatory Certification by Country for LBEE5XV2EA 18.5 Soldering Conditions	• Remove “WL_UART” • Update I/O Type • Updated Setting Power for 11ac High rate, and 11ax Low rate for 5GHz. • Remove • Update Figure 31
10 (I)	2024.08.30	7.2 Pin Descriptions 13 Power-On Sequence 14 Interface Timing and AC Characteristics	• Add single descriptions • Modify wait at least time 150ms→51.5ms • Modify Pin name WLREG_ON/BTREG_ON→ WL_REG_ON/BT_REG_ON • Modify Pin name: PCM_BCLK/ PCM_OUT→ BT_PCM_CLK/BT_PCM_OUT
11 (J)	2024.9.18	14.5 PCI Express Interface Parameters 15.1.1,2 High/Low-Rate Condition for IEEE 802.11b - 2.4 GHz 15.2.1,2 High/Low-Rate Condition for IEEE 802.11g - 2.4 GHz	• Modify “VIH”, “Vcross” • Modify Power-on/off ramp Unit • Modify Maximum input level
12 (K)	2024.10.04	4 Block Diagram	• Add S-ANT, D-ANT block diagram
13 (L)	2025.01.24	6 Dimensions, Markings, and Terminal Configurations 15 DC/RF Characteristics	• Add Figure 4: Structure • Format changed
14	Mar 31, 2025	• 5.2 Radio Regulatory Certification by Country • 13 DC/RF Characteristics	• Add • Format change • Updated (Base IC datasheet revision: G)
15	Mar 4, 2026	Table 6: Terminal Configurations 14.2.3 Short Frame Sync - Master Mode	• Modify description Pin13 I2S_IRCK→I2S_LRCK • Modify description
16	Jun 4, 2026	14 Digital I/O Requirement	• Add

Copyright © Murata Manufacturing Co., Ltd. All rights reserved. The information and content in this document are provided “as-is” with no warranties of any kind and are for informational purpose only. Data and information have been carefully checked and are believed to be accurate; however, no liability or responsibility for any errors, omissions, or inaccuracies is assumed.

The Bluetooth® word mark and logos are registered trademarks owned by Bluetooth SIG, Inc. Other brands and product names are trademarks or registered trademarks of their respective owners.

Specifications are subject to change without notice.

Downloaded from Arrow.com.