Overview

Metallized polypropylene film encapsulated with self-extinguishing resin in a box of material recognized to UL 94 V–0.

Applications

For worldwide use as electromagnetic interference (EMI) suppression filter in across-the-line applications requiring X1 safety classification.

Benefits

- Approvals: ENEC, UL, cUL, CQC
- Rated voltage: 760 VAC 50/60 Hz
- Capacitance range: 0.01 – 1.8 µF
- Lead spacing: 22.5 – 37.5 mm
- Capacitance tolerance: ±20%, ±10%
- Climatic category 40/110/56, IEC 60068–1
- Tape & Reel in accordance with IEC 60286–2
- RoHS Compliant and lead-free terminations
- Operating temperature range of -40°C to +110°C
- 100% screening factory test at 4,250 VDC

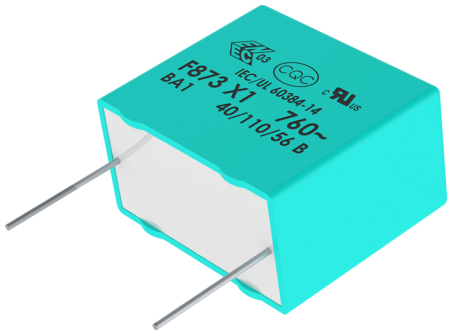

Part Number System

F	873	D	U	104	M	760	C
Capacitor Class	Series	Lead Spacing (mm)	Size Code	Capacitance Code (pF)	Capacitance Tolerance	Voltage (VAC)	Packaging
F = Film	X1, Metallized Polypropylene	D = 22.5 F = 27.5 R = 37.5	See Dimension Table	First two digits represent significant figures. Third digit specifies number of zeros.	K = ±10% M = ±20%	760	See Ordering Options Table

Downloaded from Arrow.com.

Ordering Options Table

Lead Spacing Nominal (mm)	Type of Leads and Packaging	Lead Length (mm)	Lead and Packaging Code
22.5	**Standard Lead and Packaging Options**		
	Pizza – Long Leads	17+0/-1	ZLH0J
	Pizza Pack	4+2/-0	Z
	Other Lead and Packaging Options		
	Pizza – Short Leads	3.2 +0.3/-0.2	ZL32K
	Tape & Reel (Standard Reel)	H_0= 18.5±0.5	L
	Tape & Reel (Large Reel)	H_0= 18.5±0.5	P
	Ammo Pack	H_0= 18.5±0.5	R
27.5	**Standard Lead and Packaging Options**		
	Pizza – Long Leads	17+0/-1	ZLH0J
	Pizza Pack	4+2/-0	Z
	Pizza – Short Leads	3.2 +0.3/-0.2	ZL32K
37.5	**Standard Lead and Packaging Options**		
	Pizza – Long Leads	17+0/-1	ZLH0J
	Pizza Pack	4+2/-0	Z
	Pizza – Short Leads	3.2 +0.3/-0.2	ZL32K

Downloaded from Arrow.com.

Dimensions – Millimeters

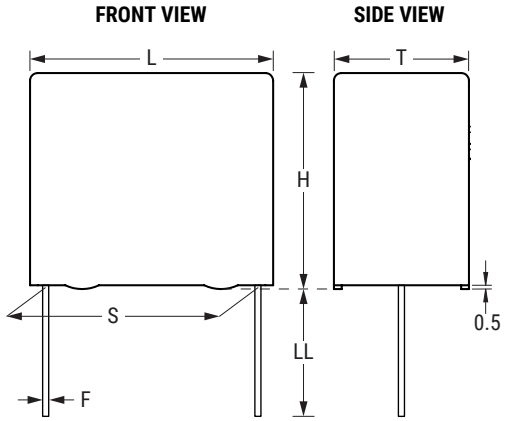

Size Code	Version	S		T		H		L		F	
		Nominal	Tolerance	Nominal	Tolerance	Nominal	Tolerance	Nominal	Tolerance	Nominal	Tolerance
DB		22.5	±0.4	6.0	+0/-0.5	14.5	+0/-0.5	26.0	+0/-0.5	0.8	±0.05
DI		22.5	±0.4	7.0	+0/-0.5	16.0	+0/-0.5	26.0	+0/-0.5	0.8	±0.05
DH		22.5	±0.4	8.0	+0/-0.5	16.0	+0/-0.5	26.0	+0/-0.5	0.8	±0.05
DJ		22.5	±0.4	8.5	+0/-0.5	17.0	+0/-0.5	26.0	+0/-0.5	0.8	±0.05
DM		22.5	±0.4	9.0	+0/-0.5	18.5	+0/-0.5	26.0	+0/-0.5	0.8	±0.05
DO		22.5	±0.4	10.0	+0/-0.5	18.5	+0/-0.5	26.0	+0/-0.5	0.8	±0.05
DP		22.5	±0.4	11.0	+0/-0.5	20.0	+0/-0.5	26.0	+0/-0.5	0.8	±0.05
DU		22.5	±0.4	13.0	+0/-0.5	22.0	+0/-0.5	26.0	+0/-0.5	0.8	±0.05
DY		22.5	±0.4	15.5	+0/-0.5	24.5	+0/-0.5	26.0	+0/-0.5	0.8	±0.05
FB		27.5	±0.4	9.0	+0/-0.7	17.0	+0/-0.7	31.5	+0/-0.7	0.8	±0.05
FC		27.5	±0.4	11.0	+0/-0.7	20.0	+0/-0.7	31.5	+0/-0.7	0.8	±0.05
FI		27.5	±0.4	13.0	+0/-0.7	25.0	+0/-0.7	31.5	+0/-0.7	0.8	±0.05
FN		27.5	±0.4	14.0	+0/-0.7	28.0	+0/-0.7	31.5	+0/-0.7	0.8	±0.05
FO	High Profile	27.5	±0.4	17.0	+0/-0.7	40.0	+0/-0.7	31.5	+0/-0.7	0.8	±0.05
FR		27.5	±0.4	17.5	+0/-0.7	28.0	+0/-0.7	31.5	+0/-0.7	0.8	±0.05
FS		27.5	±0.4	19.0	+0/-0.7	29.0	+0/-0.7	31.5	+0/-0.7	0.8	±0.05
FY		27.5	±0.4	22.0	+0/-0.7	37.0	+0/-0.7	31.5	+0/-0.7	0.8	±0.05
FH	Low Profile	27.5	±0.4	21.0	+0/-0.7	12.5	+0/-0.7	31.5	+0/-0.7	0.8	±0.05
FQ	Low Profile	27.5	±0.4	27.5	+0/-0.7	16.0	+0/-0.7	31.5	+0/-0.7	0.8	±0.05
FT	Low Profile	27.5	±0.4	31.0	+0/-0.7	19.0	+0/-0.7	31.5	+0/-0.7	0.8	±0.05
RB		37.5	±0.4	11.0	+0/-0.7	22.0	+0/-0.7	41.0	+0/-0.7	1.0	±0.05
RF		37.5	±0.4	13.0	+0/-0.7	24.0	+0/-0.7	41.0	+0/-0.7	1.0	±0.05
RH		37.5	±0.4	15.0	+0/-0.7	26.0	+0/-0.7	41.0	+0/-0.7	1.0	±0.05
RC		37.5	±0.4	16.0	+0/-0.7	28.5	+0/-0.7	41.0	+0/-0.7	1.0	±0.05
RD		37.5	±0.4	19.0	+0/-0.7	32.0	+0/-0.7	41.0	+0/-0.7	1.0	±0.05
RP		37.5	±0.4	21.0	+0/-0.7	38.0	+0/-0.7	41.0	+0/-0.7	1.0	±0.05
RO		37.5	±0.4	24.0	+0/-0.7	44.0	+0/-0.7	41.0	+0/-0.7	1.0	±0.05
RU		37.5	±0.4	30.0	+0/-0.7	45.0	+0/-0.7	41.0	+0/-0.7	1.0	±0.05
RV	Low Profile	37.5	±0.4	24.0	+0/-0.7	15.0	+0/-0.7	41.0	+0/-0.7	1.0	±0.05
RW	Low Profile	37.5	±0.4	24.0	+0/-0.7	19.0	+0/-0.7	41.0	+0/-0.7	1.0	±0.05

Note: See Ordering Options Table for lead length (LL) options.

Downloaded from Arrow.com.

Performance Characteristics

Rated Voltage	760 VAC 50/60 Hz
Capacitance Range	0.01 – 1.8 µF
Capacitance Tolerance	±20%, ±10%
Operating Temperature Range	−40 to +110°C
Rated Temperature	+110°C
Climatic Category	40/110/56
Storage Conditions	Storage time: ≤ 24 months from the date marked on the label package Average relative humidity per year ≤ 70% RH ≤ 85% for 30 days randomly distributed throughout the year Dew is absent Temperature: -40 to 80°C (see "Maximum Humidity in Storage Conditions" graph below)
Approvals	ENEC, UL, cUL, CQC

Dissipation Factor	Maximum Values at +23°C		
		C ≤ 0.1 µF	C > 0.1 µF
	1 kHz	0.1%	0.1%

Test Voltage Between Terminals	
	The 100% screening factory test is carried out at 4,250 VDC. The voltage level is selected to meet the requirements in applicable equipment standards. All electrical characteristics are checked after the test. It's not permitted to repeat this Test as there is a risk to damage the Capacitor. KEMET is not liable in such case for any failures

Insulation Resistance	Measured at +25°C ±5°C, according to IEC 60384-2			
	Minimum Values Between Terminals			
	Voltage Charge	Voltage Charge time	C ≤ 0.33 µF	C > 0.33 µF
	100 VDC	1 minute	≥ 3 • 10⁴ MΩ	≥ 10,000 MΩ • µF

In DC Applications	
	Recommended Voltage ≤ 1,500 VDC

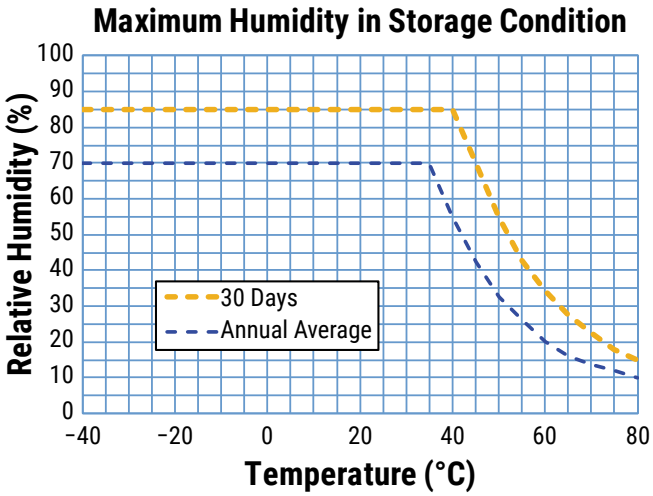

Downloaded from Arrow.com.

Impedance Graph

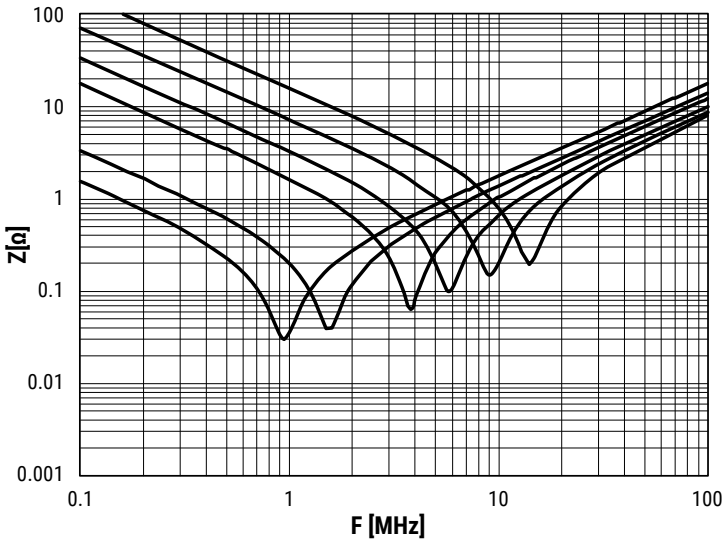

Environmental Test Data

Test	IEC Publication	Procedure
Endurance	IEC 60384–14	1.25 x V_R VAC 50 Hz, once every hour increase to 1,000 VAC for 0.1 second, 1,000 hours at upper rated temperature
Vibration	IEC 60068–2–6 Test Fc	3 directions at 2 hours each 10 – 55 Hz at 0.75 mm or 98 m/s^2
Bump	IEC 60068–2–29 Test Eb	1,000 bumps at 390 m/s^2
Change of Temperature	IEC 60068–2–14 Test Na	Upper and lower rated temperature 5 cycles
Active Flammability	IEC 60384–14	V_R +20 surge pulses at 4 kV (pulse every 5 seconds)
Passive Flammability	IEC 60384–14	IEC 60384–1, IEC 60695–11–5 Needle-flame test
Damp Heat Steady State	IEC 60068-2-78 Test Cab	+40°C and 93% R.H., 56 days
Biased Humidity	IEC 60384-14:2023 Edition 5	+40°C and 93% R.H., Rated Voltage, 21 days

Downloaded from Arrow.com.

Approvals

Certification Body	Mark	Specification	File Number
IMQ S.p.A.		EN/IEC 60384-14	CA08.00188
UL		UL 60384-14 and CAN/CSA-E60384-14	E97797
CQC		IEC 60384-14	CQC12001084815 CQC12001084817 CQC12001084814 CQC12001084820 CQC12001088068

Environmental Compliance

All new KEMET EMI capacitors are RoHS compliant and Halogen-Free.

Downloaded from Arrow.com.

Table 1 – Ratings & Part Number Reference

Capacitance Value (µF)	Size Code	Maximum Dimensions in mm			Lead Spacing (S)	dV/dt (V/µs)	Part Number
		T	H	L			
0.01	DB	6	14.5	26	22.5	300	F873DB103(1)760(2)
0.012	DB	6	14.5	26	22.5	300	F873DB123(1)760(2)
0.015	DB	6	14.5	26	22.5	300	F873DB153(1)760(2)
0.018	DB	6	14.5	26	22.5	300	F873DB183(1)760(2)
0.022	DB	6	14.5	26	22.5	300	F873DB223(1)760(2)
0.025	DB	6	14.5	26	22.5	300	F873DB253(3)760(2)
0.025	DI	7	16	26	22.5	300	F873DI253(1)760(2)
0.027	DI	7	16	26	22.5	300	F873DI273(1)760(2)
0.033	DI	7	16	26	22.5	300	F873DI333(1)760(2)
0.039	DI	7	16	26	22.5	300	F873DI393(1)760(2)
0.047	DH	8	16	26	22.5	300	F873DH473(3)760(2)
0.047	DJ	8.5	17	26	22.5	300	F873DJ473(1)760(2)
0.056	DJ	8.5	17	26	22.5	300	F873DJ563(3)760(2)
0.056	DM	9	18.5	26	22.5	300	F873DM563(1)760(2)
0.068	DO	10	18.5	26	22.5	300	F873DO683(1)760(2)
0.082	DO	10	18.5	26	22.5	300	F873DO823(3)760(2)
0.082	DP	11	20	26	22.5	300	F873DP823(1)760(2)
0.1	DP	11	20	26	22.5	300	F873DP104(3)760(2)
0.1	DU	13	22	26	22.5	300	F873DU104(1)760(2)
0.12	DU	13	22	26	22.5	300	F873DU124(1)760(2)
0.15	DY	15.5	24.5	26	22.5	300	F873DY154(1)760(2)
0.18	DY	15.5	24.5	26	22.5	300	F873DY184(1)760(2)
0.056	FB	9	17	31.5	27.5	225	F873FB563(1)760(2)
0.068	FB	9	17	31.5	27.5	225	F873FB683(1)760(2)
0.082	FB	9	17	31.5	27.5	225	F873FB823(3)760(2)
0.082	FC	11	20	31.5	27.5	225	F873FC823(1)760(2)
0.1	FC	11	20	31.5	27.5	225	F873FC104(1)760(2)
0.1	FH	21	12.5	31.5	27.5	225	F873FH104(1)760(2)
0.12	FC	11	20	31.5	27.5	225	F873FC124(3)760(2)
0.12	FH	21	12.5	31.5	27.5	225	F873FH124(1)760(2)
0.15	FH	21	12.5	31.5	27.5	225	F873FH154(3)760(2)
0.15	FI	13	25	31.5	27.5	225	F873FI154(1)760(2)
0.18	FI	13	25	31.5	27.5	225	F873FI184(1)760(2)
0.22	FI	13	25	31.5	27.5	225	F873FI224(3)760(2)
0.22	FN	14	28	31.5	27.5	225	F873FN224(1)760(2)
0.22	FQ	27.5	16	31.5	27.5	225	F873FQ224(1)760(2)
0.25	FN	14	28	31.5	27.5	225	F873FN254(3)760(2)
0.25	FO	17	40	31.5	27.5	225	F873FO254(1)760(2)
0.25	FQ	27.5	16	31.5	27.5	225	F873FQ254(3)760(2)
0.25	FR	17.5	28	31.5	27.5	225	F873FR254(1)760(2)
Capacitance Value (µF)	**Size Code**	**T (mm)**	**H (mm)**	**L (mm)**	**Lead Spacing (S)**	**dV/dt (V/µs)**	**Part Number**

(1) M = ±20%, K = ±10%.
(2) Insert lead and packaging code. See table for available options.
(3) M = ±20% (only available tolerance).

Downloaded from Arrow.com.

Table 1 – Ratings & Part Number Reference cont.

Capacitance Value (µF)	Size Code	Maximum Dimensions in mm			Lead Spacing (S)	dV/dt (V/µs)	Part Number
		T	H	L			
0.27	FO	17	40	31.5	27.5	225	F873FO274(1)760(2)
0.27	FR	17.5	28	31.5	27.5	225	F873FR274(1)760(2)
0.27	FT	31	19	31.5	27.5	225	F873FT274(1)760(2)
0.33	FO	17	40	31.5	27.5	225	F873FO334(1)760(2)
0.33	FR	17.5	28	31.5	27.5	225	F873FR334(3)760(2)
0.33	FS	19	29	31.5	27.5	225	F873FS334(1)760(2)
0.33	FT	31	19	31.5	27.5	225	F873FT334(1)760(2)
0.39	FO	17	40	31.5	27.5	225	F873FO394(1)760(2)
0.39	FS	19	29	31.5	27.5	225	F873FS394(3)760(2)
0.39	FY	22	37	31.5	27.5	225	F873FY394(1)760(2)
0.47	FY	22	37	31.5	27.5	225	F873FY474(1)760(2)
0.56	FY	22	37	31.5	27.5	225	F873FY564(1)760(2)
0.15	RB	11	22	41	37.5	150	F873RB154(1)760(2)
0.18	RB	11	22	41	37.5	150	F873RB184(1)760(2)
0.22	RB	11	22	41	37.5	150	F873RB224(3)760(2)
0.22	RV	24	15	41	37.5	150	F873RV224(1)760(2)
0.25	RF	13	24	41	37.5	150	F873RF254(1)760(2)
0.25	RV	24	15	41	37.5	150	F873RV254(1)760(2)
0.27	RF	13	24	41	37.5	150	F873RF274(1)760(2)
0.27	RV	24	15	41	37.5	150	F873RV274(1)760(2)
0.33	RF	13	24	41	37.5	150	F873RF334(3)760(2)
0.33	RH	15	26	41	37.5	150	F873RH334(1)760(2)
0.33	RV	24	15	41	37.5	150	F873RV334(3)760(2)
0.33	RW	24	19	41	37.5	150	F873RW334(1)760(2)
0.39	RC	16	28.5	41	37.5	150	F873RC394(1)760(2)
0.39	RW	24	19	41	37.5	150	F873RW394(1)760(2)
0.47	RC	16	28.5	41	37.5	150	F873RC474(3)760(2)
0.47	RD	19	32	41	37.5	150	F873RD474(1)760(2)
0.47	RW	24	19	41	37.5	150	F873RW474(3)760(2)
0.56	RD	19	32	41	37.5	150	F873RD564(1)760(2)
0.68	RD	19	32	41	37.5	150	F873RD684(3)760(2)
0.68	RP	21	38	41	37.5	150	F873RP684(1)760(2)
0.82	RO	24	44	41	37.5	150	F873RO824(1)760(2)
0.82	RP	21	38	41	37.5	150	F873RP824(3)760(2)
1	RO	24	44	41	37.5	150	F873RO105(1)760(2)
1.2	RO	24	44	41	37.5	150	F873RO125(1)760(2)
1.5	RU	30	45	41	37.5	150	F873RU155(1)760(2)
1.8	RU	30	45	41	37.5	150	F873RU185(3)760(2)
Capacitance Value (µF)	**Size Code**	**T (mm)**	**H (mm)**	**L (mm)**	**Lead Spacing (S)**	**dV/dt (V/µs)**	**Part Number**

(1) M = ±20%, K = ±10%.
(2) Insert lead and packaging code. See table for available options.
(3) M = ±20% (only available tolerance).

Downloaded from Arrow.com.

Soldering Process

The implementation of the RoHS directive has resulted in the selection of SnAgCu (SAC) alloys or SnCu alloys as primary solder. This has increased the liquidus temperature from that of 183ºC for SnPb eutectic alloy to 217 – 221°C for the new alloys. As a result, the heat stress to the components, even in wave soldering, has increased considerably due to higher pre-heat and wave temperatures. Polypropylene capacitors are especially sensitive to heat (the melting point of polypropylene is 160 – 170°C). Wave soldering can be destructive, especially for mechanically small polypropylene capacitors (with lead spacing of 5 – 15 mm), and great care has to be taken during soldering. The recommended solder profiles from KEMET should be used. Please consult KEMET with any questions. In general, the wave soldering curve from IEC Publication 61760–1 Edition 2 serves as a solid guideline for successful soldering. Please see Figure 1.

Reflow soldering is not recommended for through-hole film capacitors. Exposing capacitors to a soldering profile in excess of the above the recommended limits may result to degradation or permanent damage to the capacitors.

Do not place the polypropylene capacitor through an adhesive curing oven to cure resin for surface mount components. Insert through-hole parts after the curing of surface mount parts. Consult KEMET to discuss the actual temperature profile in the oven, if through-hole components must pass through the adhesive curing process. A maximum two soldering cycles is recommended. Please allow time for the capacitor surface temperature to return to a normal temperature before the second soldering cycle.

Manual Soldering Recommendations

Following is the recommendation for manual soldering with a soldering iron.

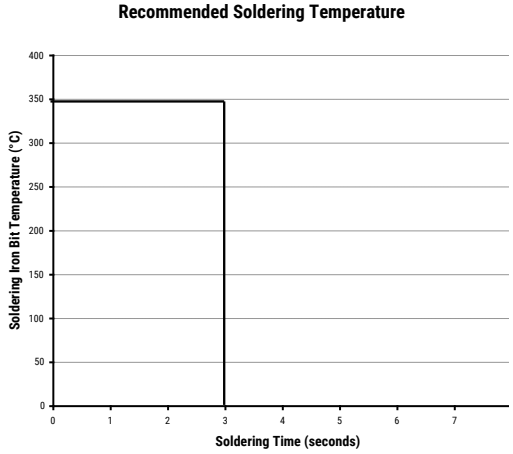

The soldering iron tip temperature should be set at 350°C (+10°C maximum), with the soldering duration not to exceed more than 3 seconds.

Wave Soldering Recommendations

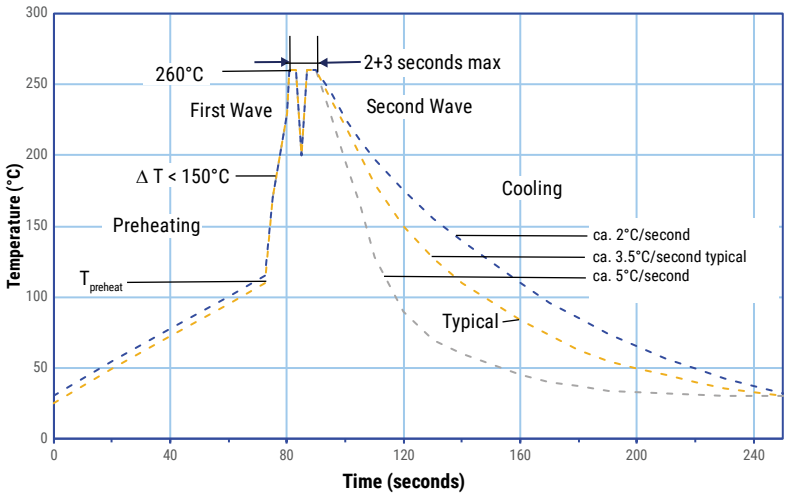

Downloaded from Arrow.com.

Soldering Process cont.

Wave Soldering Recommendations cont.

1. The table indicates the maximum set-up temperature of the soldering process
Figure 1

Dielectric Film Material	Maximum Preheat Temperature		Maximum Peak Soldering Temperature	
	Capacitor Pitch ≤ 15 mm	Capacitor Pitch > 15 mm	Capacitor Pitch ≤ 15 mm	Capacitor Pitch > 15 mm
Polyester	130°C	130°C	270°C	270°C
Polypropylene	110°C	130°C	260°C	270°C
Paper	130°C	140°C	270°C	270°C
Polyphenylene Sulphide	150°C	160°C	270°C	270°C

2. The maximum temperature measured inside the capacitor:
   Set the temperature so that inside the element the maximum temperature is below the limit:

Dielectric Film Material	Maximum temperature measured inside the element
Polyester	160°C
Polypropylene	110°C
Paper	160°C
Polyphenylene Sulphide	160°C

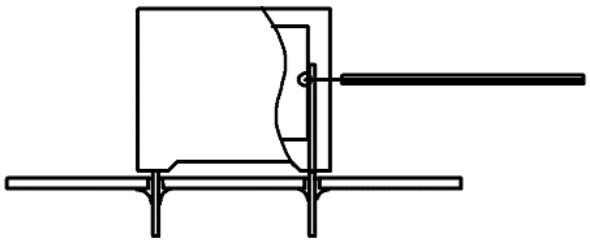

Temperature monitored inside the capacitor.

Selective Soldering Recommendations

Selective dip soldering is a variation of reflow soldering. In this method, the printed circuit board with through-hole components to be soldered is preheated and transported over the solder bath as in normal flow soldering without touching the solder. When the board is over the bath, it is stopped and pre-designed solder pots are lifted from the bath with molten solder only at the places of the selected components, and pressed against the lower surface of the board to solder the components.

The temperature profile for selective soldering is similar to the double wave flow soldering outlined in this document, **however, instead of two baths, there is only one bath with a time from 3 to 10 seconds.** In selective soldering, the risk of overheating is greater than in double wave flow soldering, and great care must be taken so that the parts are not overheated.

Downloaded from Arrow.com.

Construction

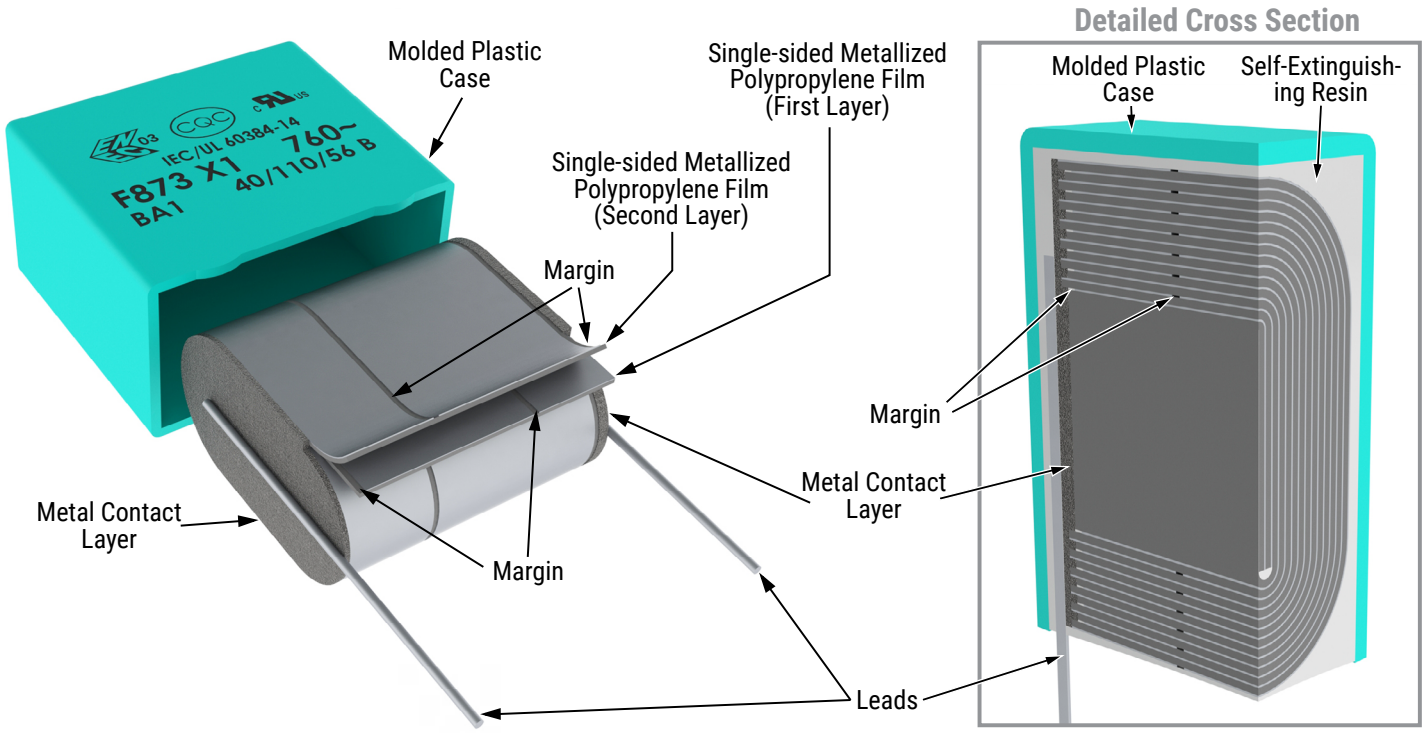

Winding Scheme

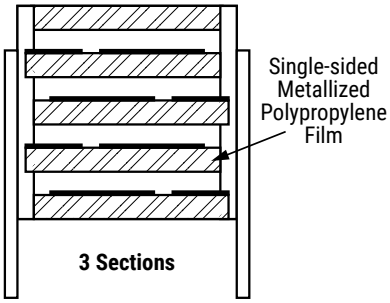

Downloaded from Arrow.com.

Marking

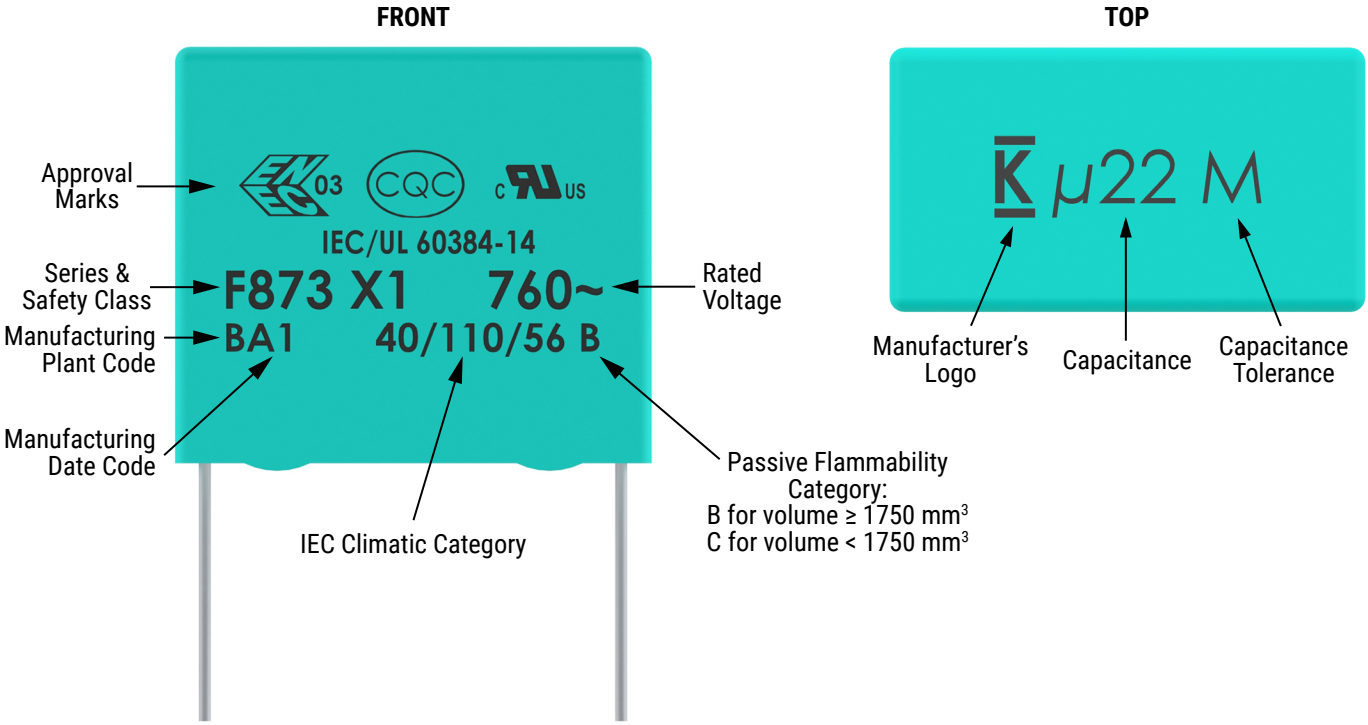

Slight change in the layout can be possible but this does not affect the content of the information of the current marking.
This change will be achieved without impact to product form, fit or function, as the products are equivalent with respect to physical, mechanical, quality and reliability characteristics

Manufacturing Date Code (IEC 60062)									
Year	Code	Year	Code	Year	Code	Month	Code	Month	Code
2020	M	2027	V	2034	E	January	1	July	7
2021	N	2028	W	2035	F	February	2	August	8
2022	P	2029	X	2036	H	March	3	September	9
2023	R	2030	A	2037	J	April	4	October	O
2024	S	2031	B	2038	K	May	5	November	N
2025	T	2032	C	2039	L	June	6	December	D
2026	U	2033	D	2040	M				

Downloaded from Arrow.com.

Packaging Quantities

Size Code	Lead Spacing	Thickness (mm)	Height (mm)	Length (mm)	Bulk Short Leads	Bulk Long Leads	Standard Reel ø 355 mm	Large Reel ø 500 mm	Ammo	Pizza
DB	22.5	6	14.5	26	805	450	300	700	464	660
DI		7	16	26	700	450	250	550	380	564
DH		8.0	16.0	26	520	300	240	500	330	492
DJ		8.5	17	26	450	350	250	450	280	468
DM		9	18.5	26	400	225	200	400	300	444
DO		10	18.5	26	360	350	160	350	235	396
DP		11	20	26	300	200	190	350	217	360
DU		13	22	26	230	150	150	300	200	300
DY		15.5	24.5	26	150	100	120	250	170	252
FB	27.5	9.0	17.0	31.5						370
FC		11.0	20.0	31.5						300
FI		13.0	25.0	31.5						250
FN		14.0	28.0	31.5						230
FO		17.0	40.0	31.5						190
FR		17.5	28.0	31.5						190
FS		19.0	29.0	31.5						170
FY		22.0	37.0	31.5						150
FH		21.0	12.5	31.5						150
FQ		27.5	16.0	31.5						120
FT		31.0	19.0	31.5						100
RB	37.5	11.0	22.0	41.0						210
RF		13.0	24.0	41.0						175
RH		15.0	26.0	41.0						154
RC		16.0	28.5	41.0						140
RD		19.0	32.0	41.0						119
RP		21.0	38.0	41.0						105
RO		24.0	44.0	41.0						91
RU		30.0	45.0	41.0						77
RV		24.0	15.0	41.0						91
RW		24.0	19.0	41.0						91

Downloaded from Arrow.com.

Lead Taping & Packaging (IEC 60286–2)

Lead Spacing 5 mm

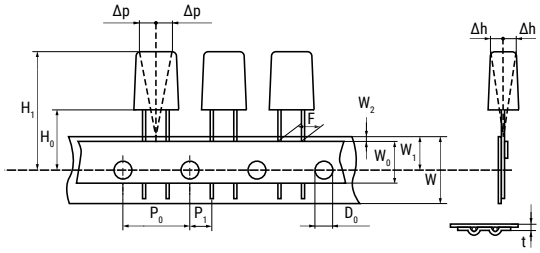

Lead Spacing 7.5 mm

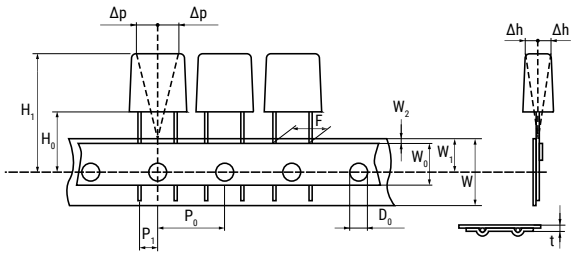

Lead Spacing 10 – 15 mm

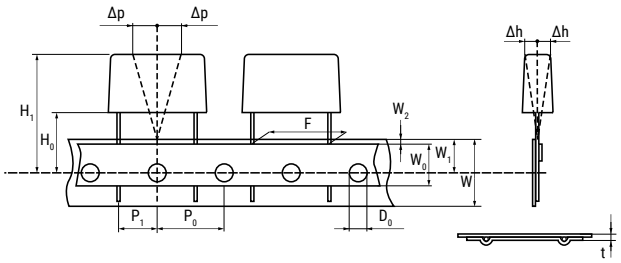

Lead Spacing 22.5 – 27.5 mm

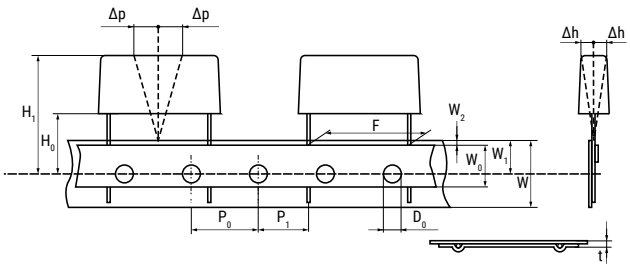

Taping Specification

Dimensions in mm									Standard IEC 60286–2
Lead Spacing	+0.6/−0.1	F	5.0	7.5	10.0	15.0	22.5	27.5	F
Carrier Tape Width	+1/−0.5	W	18.0	18.0	18.0	18.0	18.0	18.0	$18^{+1/-0.5}$
Hold-Down Tape Width	Minimum	W_0	6.0	6.0	9.0	10.0	10.0	10.0	
Position of Sprocket Hole	±0.5	W_1	9.0	9.0	9.0	9.0	9.0	9.0	$9^{+0.75/-0.5}$
Distance Between Tapes	Maximum	W_2	3.0	3.0	3.0	3.0	3.0	3.0	3.0
Sprocket Hole Diameter	±0.2	D_0	4.0	4.0	4.0	4.0	4.0	4.0	4.0
Feed Hole Lead Spacing	±0.2(1)	P_0(3)	12.7	12.7	12.7	12.7	12.7	12.7	12.7
Distance Lead – Feed Hole	±0.7	P_1	3.85	3.75	7.7	5.2	7.8	5.3	P^1
Deviation Tape – Plane	Maximum	Δp	1.3	1.3	1.3	1.3	1.3	1.3	1.3
Lateral Deviation	±2	Δh	2.0	2.0	2.0	2.0	2.0	2.0	2.0
Total Thickness	±0.2	t	0.7	0.7	0.7	0.7	0.9^{MAX}	0.9^{MAX}	0.9^{MAX}
Sprocket Hole/Cap Body	±0.5	H_0(2)	$18.5^{\pm0.5}$	$18.5^{\pm0.5}$	$18.5^{\pm0.5}$	$18.5^{\pm0.5}$	$18.5^{\pm0.5}$	$18.5^{\pm0.5}$	$18^{+2/-0}$

(1) Maximum cumulative feed hole error, 1 mm per 20 parts.
(2) 16.5 mm available on request.
(3) 15 mm available on request (F ≥ 10 mm).

Downloaded from Arrow.com.

Lead Taping & Packaging (IEC 60286–2) cont.

Ammo Specifications

Series	Dimensions (mm)		
	H	W	T
F5A, F5B, F5D	360	340	59
F6xx, F8xx			
PHExxx, PMExxx, PMRxxx	330	330	50

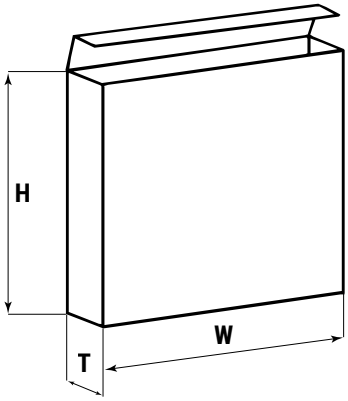

Reel Specifications

Series	Dimensions (mm)		
	D	H	W
F5A, F5B, F5D	355	30	55 (Max)
F6xx, F8xx	500	25	
PHExxx, PMExxx, PMRxxx	360 500	30	46 (Max)

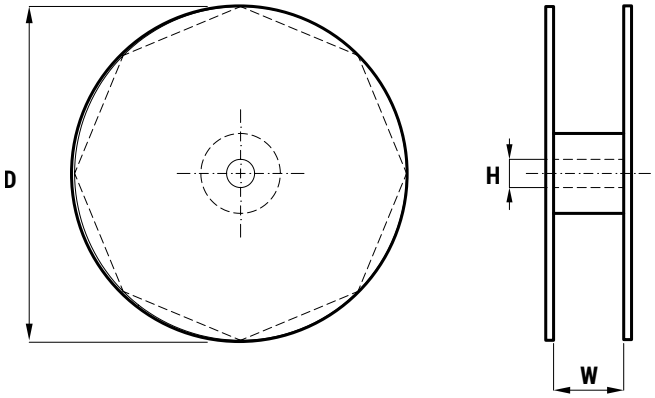

Downloaded from Arrow.com.

KEMET Electronics Corporation Sales Offices

For a complete list of our global sales offices, please visit https://www.yageogroup.com/SalesResources/SalesOffices

Disclaimer

YAGEO Corporation and its affiliates do not recommend the use of commercial or automotive grade products for high reliability applications or manned space flight.

All product specifications, statements, information and data (collectively, the "Information") in this datasheet are subject to change. The customer is responsible for checking and verifying the extent to which the Information contained in this publication is applicable to an order at the time the order is placed. All Information given herein is believed to be accurate and reliable, but it is presented without guarantee, warranty, or responsibility of any kind, expressed or implied.

Statements of suitability for certain applications are based on KEMET Electronics Corporation's ("KEMET") knowledge of typical operating conditions for such applications, but are not intended to constitute – and KEMET specifically disclaims – any warranty concerning suitability for a specific customer application or use. The Information is intended for use only by customers who have the requisite experience and capability to determine the correct products for their application. Any technical advice inferred from this Information or otherwise provided by KEMET with reference to the use of KEMET's products is given gratis, and KEMET assumes no obligation or liability for the advice given or results obtained.

Although KEMET designs and manufactures its products to the most stringent quality and safety standards, given the current state of the art, isolated component failures may still occur. Accordingly, customer applications which require a high degree of reliability or safety should employ suitable designs or other safeguards (such as installation of protective circuitry or redundancies) in order to ensure that the failure of an electrical component does not result in a risk of personal injury or property damage.

Although all product–related warnings, cautions and notes must be observed, the customer should not assume that all safety measures are indicated or that other measures may not be required.

Additional information about production site flexibility can be found <here>

KEMET is a registered trademark of KEMET Electronics Corporation.

Downloaded from Arrow.com.