TOSHIBA BiCD Integrated Circuit Silicon Monolithic

TB67S512FTAG

CLOCK-in controlled Bipolar Stepping Motor Driver

1. Description

The TB67S512FTAG is a two-phase bipolar stepping motor driver using a PWM chopper. A CLK-in decoder is incorporated. Fabricated with the BiCD process, rating is 40 V/2.0 A.

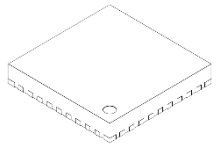

P-WQFN36-0606-0.50-002

Weight: 0.1 g (Typ.)

2. Features

- Monolithic IC integrated by BiCD process
- Capable of controlling bipolar stepping motor by single IC
- PWM controlled constant-current drive
- Supporting full, half, and quarter step resolutions
- Built-in output MOSFET with low ON resistance (Upper + Lower side = 0.8 Ω (Typ.))
- High voltage and current drive (For specifications, please refer to the absolute maximum ratings and the operation ranges)
- Built-in output functions of error detection (TSD and ISD) flags
- Built-in error detection circuits (Thermal shutdown (TSD), over-current detection circuit (ISD), and power-on reset (POR))
- Built-in VCC regulator for internal circuit drive
- Chopping frequency of a motor can be customized by external components
- Package: P-WQFN36-0606-0.50-002

Note: Please be careful about thermal conditions during use.

Start of commercial production
2016-12

©2026
Toshiba Electronic Devices & Storage Corporation

Downloaded from Arrow.com.

3. Block Diagram

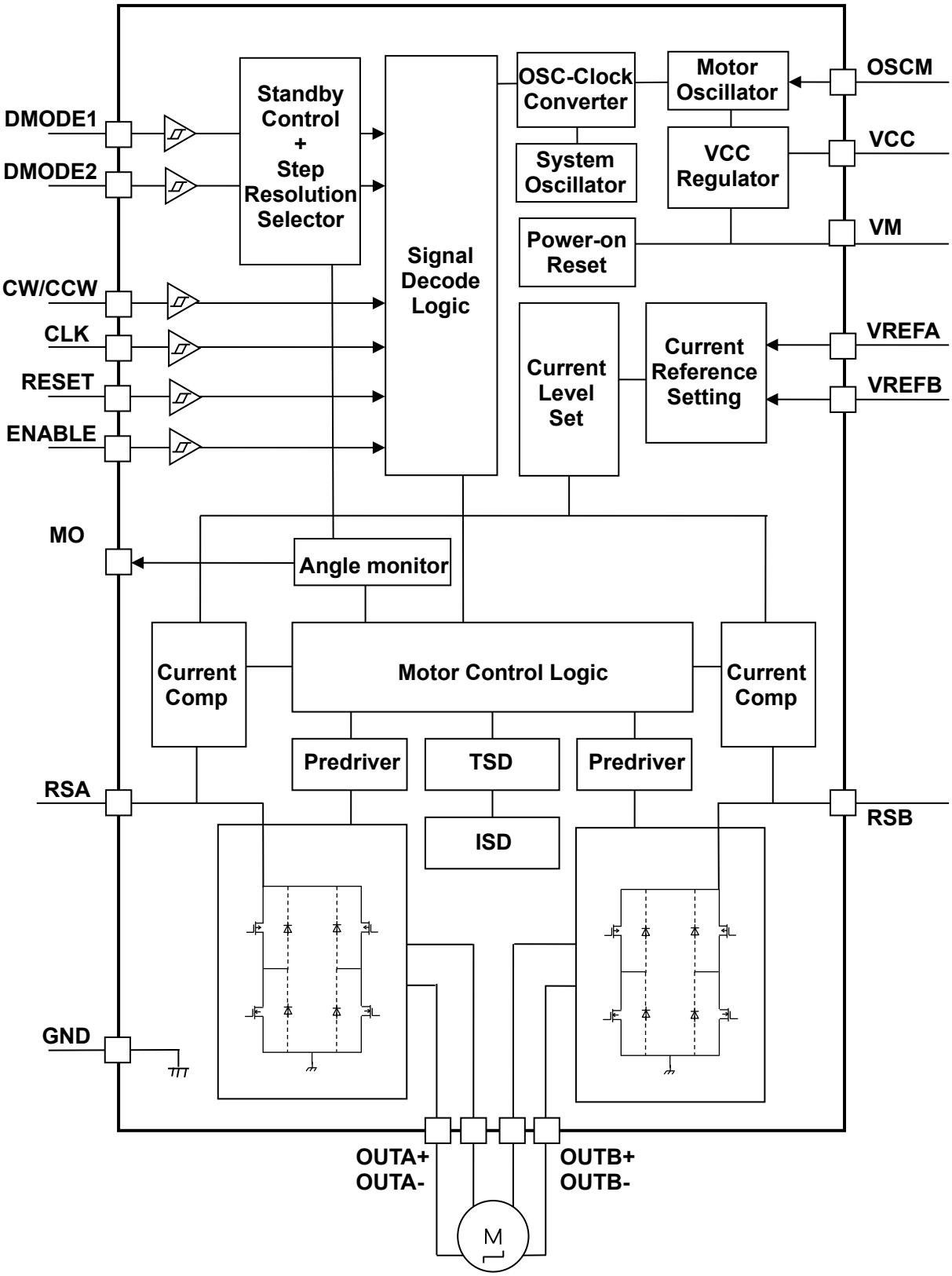

Figure 3.1 Block Diagram

Note: Some of the functional blocks, circuits, or constants in the block diagram may be omitted or simplified for explanatory purposes.

©2026
Toshiba Electronic Devices & Storage Corporation

Downloaded from Arrow.com.

Note: All the grounding wires of the TB67S512FTAG should run on the solder mask on the PCB and be externally terminated at only one point. Also, a grounding method should be considered for efficient heat dissipation.
Utmost care is necessary in the design of the output, VM, and GND lines since the IC may be destroyed by short-circuiting between outputs, or by short-circuiting to the power supply or ground. Especially, if power supply pins (VM, RS, OUT, and GND), through which a particularly large current may run, are wired incorrectly, an operation error may occur or the device may be destroyed.
Also, if logic input pins are wired incorrectly, an operation error may occur or the device may be destroyed.
In this case, the IC may be destroyed because over rating current flows. Pay enough attention in designing patterns and mounting the IC.

©2026
Toshiba Electronic Devices & Storage Corporation

Downloaded from Arrow.com.

4. Pin Assignments

(Top View)

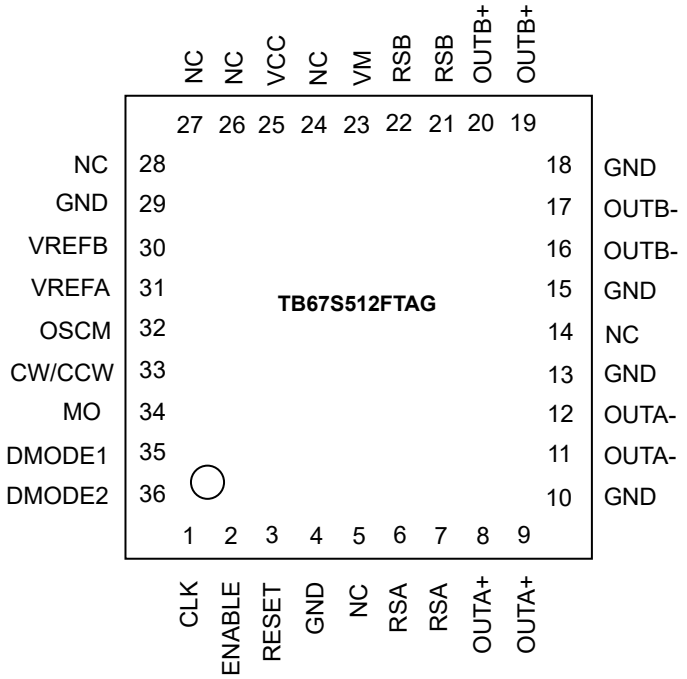

Figure 4.1 Pin Assignments (top view)

Downloaded from Arrow.com.

5. Pin Description

Table 5.1 Pin Description

Pin No.	Pin Name	Function
1	CLK	CLK control input pin
2	ENABLE	ON/OFF control output pin of Ach and Bch
3	RESET	Electrical angle reset pin
4	GND	Ground pin
5	NC	Non-connection pin
6	RSA (Note)	Motor output current sense pin of Ach
7	RSA (Note)	Motor output current sense pin of Ach
8	OUTA+ (Note)	Motor output pin (+) of Ach
9	OUTA+ (Note)	Motor output pin (+) of Ach
10	GND	Ground pin
11	OUTA- (Note)	Motor output pin (-) of Ach
12	OUTA- (Note)	Motor output pin (-) of Ach
13	GND	Ground pin
14	NC	Non-connection pin
15	GND	Ground pin
16	OUTB- (Note)	Motor output pin (-) of Bch
17	OUTB- (Note)	Motor output pin (-) of Bch
18	GND	Ground pin
19	OUTB+ (Note)	Motor output pin (+) of Bch
20	OUTB+ (Note)	Motor output pin (+) of Bch
21	RSB (Note)	Motor output current sense pin of Bch
22	RSB (Note)	Motor output current sense pin of Bch
23	VM	VM power supply pin
24	NC	Non-connection pin
25	VCC	Internal VCC regulator monitor pin
26	NC	Non-connection pin
27	NC	Non-connection pin
28	NC	Non-connection pin
29	GND	Ground pin
30	VREFB	Motor output set pin of Bch
31	VREFA	Motor output set pin of Ach
32	OSCM	Oscillating frequency set pin for chopping
33	CW/CCW	Motor rotation direction set pin (Forward/Reverse)
34	MO	Electrical angle monitor pin
35	DMODE1	Step resolution set pin 1
36	DMODE2	Step resolution set pin 2

Note: Please keep NC pins open.
Please connect the pins with the same pin name nearby, while using the TB67S512FTAG.

Downloaded from Arrow.com.

5.1. INPUT/OUTPUT equivalent circuit

Table 5.2 INPUT/OUTPUT equivalent circuit (TB67S269)

Pin name	IN/OUT signal	Equivalent circuit
DMODE1 DMODE2 CLK ENABLE RESET CW/CCW	Digital Input (VIH/VIL) VIH: 2.0 V(Min) to 5.5 V(Max) VIL: 0 V(Min) to 0.8 V(Max)	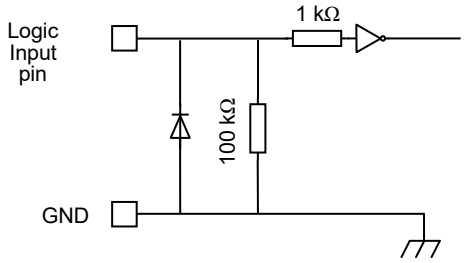
MO	Digital Output (VOH/VOL) (Pullup resistance:10 k to 100 kΩ)	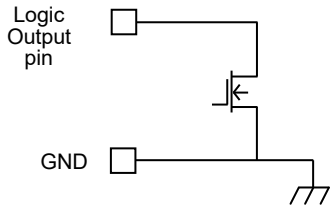
VCC VREFA VREFB	VCC voltage range 4.75 V(Min) to 5.0 V(Typ.) to 5.25 V(Max) VREF voltage range 0 V to 3.6 V	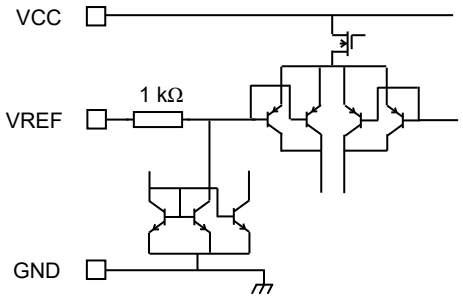
OSCM	OSCM frequency setting range 0.64 MHz(Min) to 1.12 MHz(Typ.) to 2.4 MHz(Max)	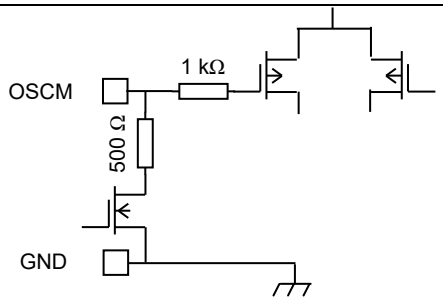
OUTA+ OUTA- OUTB+ OUTB- RSA RSB	VM power supply voltage range 10 V(Min) to 47 V(Max) OUTPUT pin voltage 10 V(Min) to 47 V(Max)	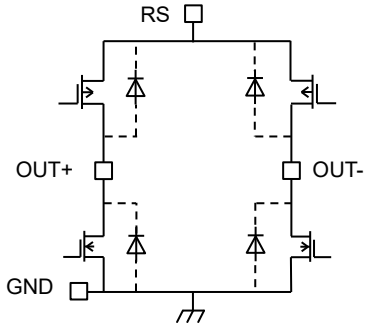

Note: The equivalent circuit diagrams may be simplified or some parts of them may be omitted for explanatory purposes.

©2026
Toshiba Electronic Devices & Storage Corporation

Downloaded from Arrow.com.

6. Function explanation (Stepping motor)

6.1. CLK function

Each electrical angle is shifted every CLK signal. Each CLK signal is reflected at the up-edge.

Table 6.1 CLK function

CLK Input	Function
↑	Electrical angle is shifted to the next step at the up-edge
↓	(State of the electrical angle does not change.)

6.2. ENABLE function

The ENABLE pin controls ON and OFF of the driving current during the stepping motor operation. The OFF mode (High impedance) and the ON mode can be switched by controlling this pin. Please set the ENABLE pin to 'L' during VM power-on and power-off sequence.

Table 6.2 ENABLE function

ENABLE Input	Function
H	Output transistor = ON (Normal operation)
L	Output transistor = OFF (High impedance)

6.3. CW/CCW function and the output pin function (Output logic in starting charge)

The CW/CCW pin controls the rotation direction of the stepping motor. When set to 'Clockwise', the current of channel A is outputted first, with a phase difference of 90 °. When set to 'Counter clockwise", the current of channel B is outputted first with a phase difference of 90 °.

Table 6.3 CW/CCW function

CW/CCW input	OUT (+)	OUT (-)
H: Forward rotation (CW)	H	L
L: Reverse rotation (CCW)	L	H

6.4. Function of step resolution setting

Table 6.4 Function of step resolution setting

DMODE1	DMODE2	Function
L	L	Standby mode (the OSCM is disabled and the output transistor is set to 'OFF' mode)
L	H	Full step resolution
H	L	Half step resolution
H	H	Quarter step resolution

It is recommended to switch the DMODE1 and the DMODE2 after the RESET signal is set to low in the initial state.

©2026
Toshiba Electronic Devices & Storage Corporation

Downloaded from Arrow.com.

6.4.1. Electrical angle and initial position in setting step resolution

6.4.1.1. Full step resolution

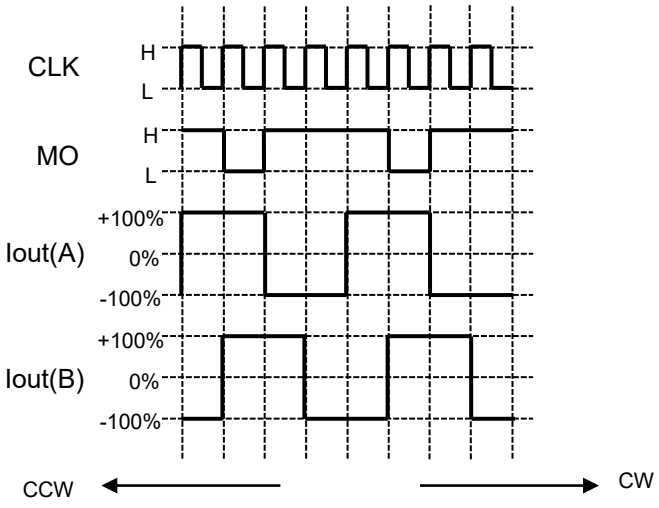

Figure 6.1 Full step resolution

6.4.1.2. Half step resolution

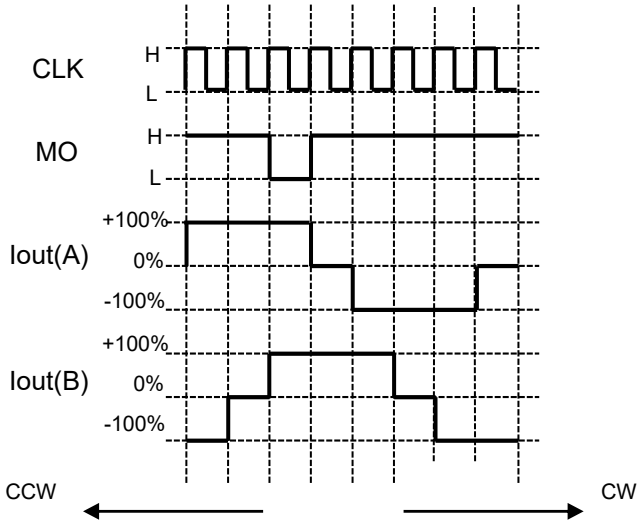

Figure 6.2 Half step resolution

MO output shown in the timing chart is when the MO pin is pulled up.

Note: Timing charts may be simplified for explanatory purpose.

©2026
Toshiba Electronic Devices & Storage Corporation

Downloaded from Arrow.com.

6.4.1.3. Quarter step resolution

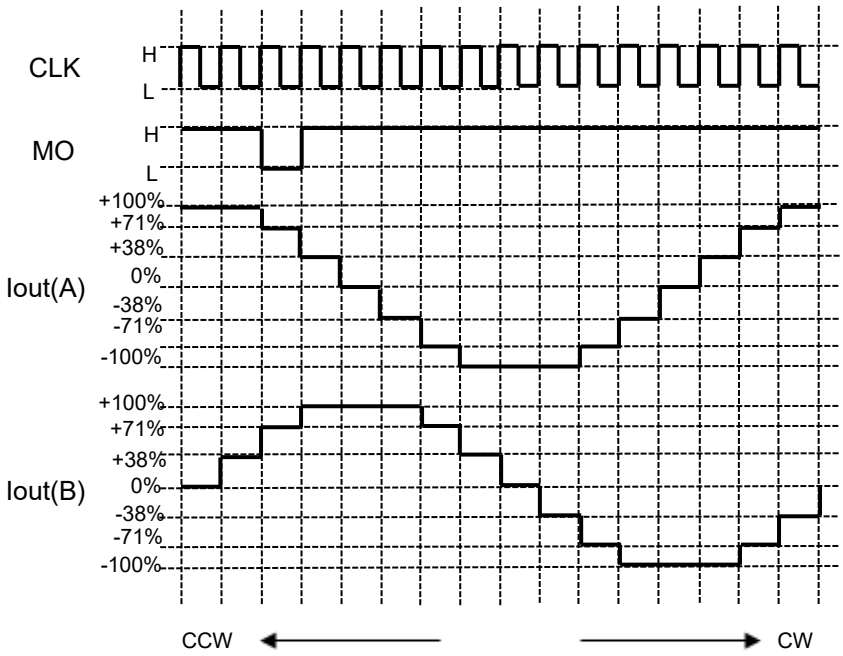

Figure 6.3 Quarter step resolution

MO output shown in the timing chart is when the MO pin is pulled up.

Note: Timing charts may be simplified for explanatory purpose.

6.5. RESET function

Table 6.5 RESET function

RESET Input	Function
H	Sets the electrical angle to the initial condition.
L	Normal operation mode

The current for each phase, while RESET is performed, is shown in the table below. In this case, MO is Low.

Step resolution mode	Ach current	Bch current	Default electrical angle
Full step	100 %	100 %	45 °
Half step	100 %	100 %	45 °
Quarter step	71 %	71 %	45 °

Downloaded from Arrow.com.

6.6. Mixed Decay Mode /Detecting zero point

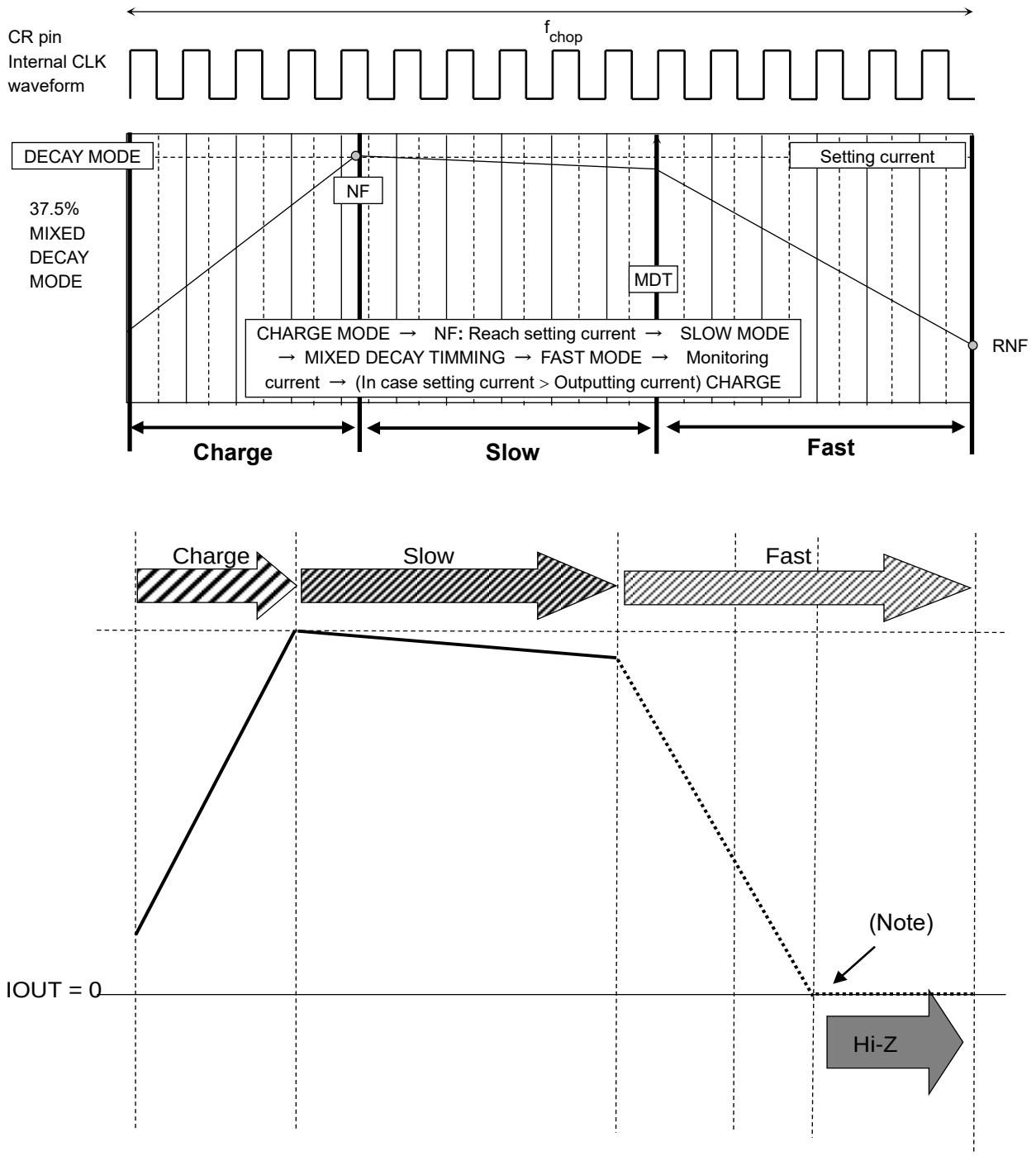

Figure 6.4 Mixed Decay Mode /Detecting zero point

Note: When the motor current reaches zero level (Iout = 0 A), the output becomes "Hi-Z" state.

Downloaded from Arrow.com.

6.7. Output transistor function mode

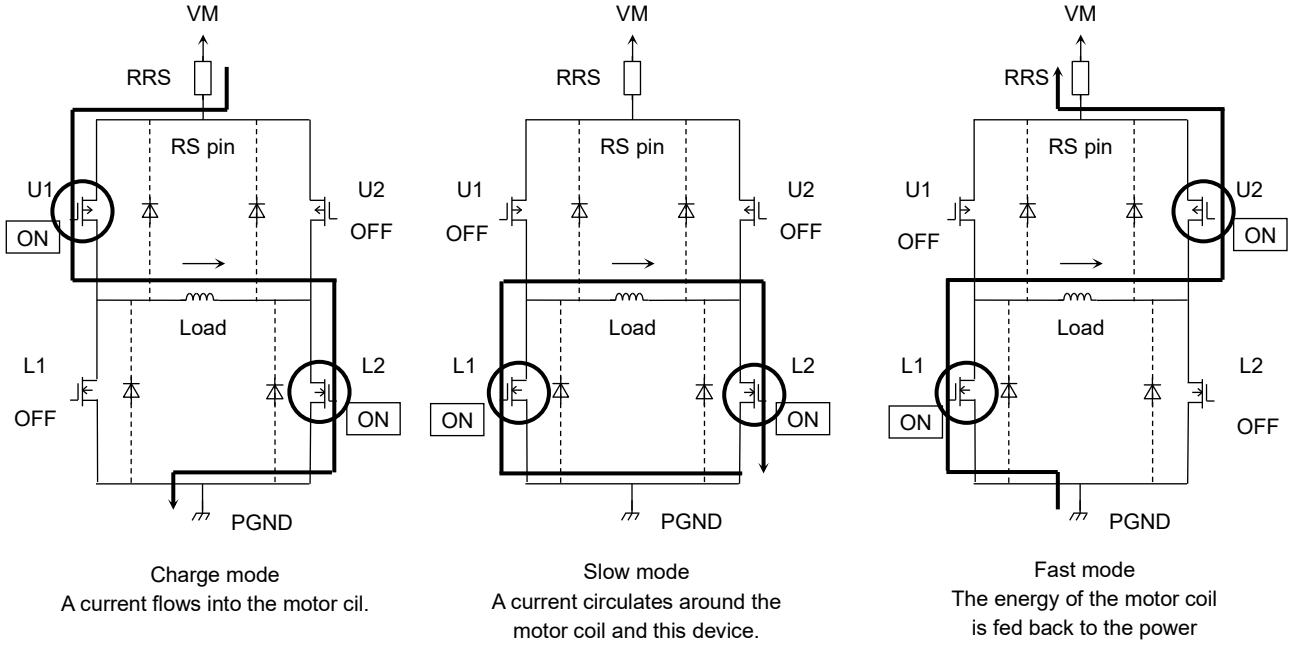

Figure 6.5 Output transistor function mode

Output transistor function

Table 6.6 Output transistor function mode

MODE	U1	U2	L1	L2
CHARGE	ON	OFF	OFF	ON
SLOW	OFF	OFF	ON	ON
FAST	OFF	ON	ON	OFF

Note: In case of the current direction shown in the above figures.
If the current flows in the opposite direction, refer to the following table.

MODE	U1	U2	L1	L2
CHARGE	OFF	ON	ON	OFF
SLOW	OFF	OFF	ON	ON
FAST	ON	OFF	OFF	ON

This IC controls the constant motor current by 3 modes listed above.
Note: The equivalent circuit diagrams may be simplified or some parts of them may be omitted for explanatory purposes.

Downloaded from Arrow.com.

6.8. Calculation of the Predefined Output Current

This IC drives a motor by controlling the PWM constant current with the base of the OSCM oscillating frequency. The peak output current (Setting current) can be determined by the current-sensing resistor (RS) and the reference voltage (Vref) as follows;

$$\text{Iout(Max)} = \text{Vref(gain)} \times \frac{\text{Vref(V)}}{\text{RRS}(\Omega)}$$

Vref(gain) : the Vref decay rate is 1/ 5.0 (Typ.)

Example : In the case of a 100 % setup

When Vref = 3.0 V, Torque = 100 %, and RS = 0.51 Ω, the constant output current (peak current) of the motor is calculated as follows;

I_{out} = 3.0V / 5.0 / 0.51Ω= 1.18 A

6.9. Calculation of the OSCM oscillation frequency (chopper reference frequency)

An approximation of the OSCM oscillation frequency (fOSCM) and chopper frequency (fchop) can be calculated by the following expressions.

fOSCM=1/[0.56x{Cx(R1+500)}]
C,R1: External constant number for OSCM
(When C = 270 pF and R1 = 3.6 kΩ, fOSCM = 1.6 MHz (Typ.))

fchop = fOSCM / 16
When fOSCM = 1.6 MHz, fchop is approximately 100 kHz.

If chopping frequency is raised, the ripple of the current decreases and the waveform reproducibility is improved. However, the gate loss inside IC becomes large and the heat generation increases.

By lowering chopping frequency, reduction of heat generation is expectable. However, the ripple of the current may increase. Generally, a frequency of about 70 kHz is set as a reference value. A setup in the range of 50 to 100 kHz is recommended.

©2026
Toshiba Electronic Devices & Storage Corporation

Downloaded from Arrow.com.

7. Absolute Maximum Ratings

Table 7.1 Absolute Maximum Ratings (T_a = 25 °C)

Characteristics		Symbol	Rating	Unit	Remarks
Motor power voltage		VM	40	V	—
Motor output voltage		Vout	40	V	—
Motor output current		IOUT	2.0	A	(Note1)
Internal logic power supply		VCC	6.0	V	When externally applied.
Logic input voltage		VIN(H)	6.0	V	—
		VIN(L)	-0.4	V	—
MO output voltage		VMO	6.0	V	—
MO input current		IMO	30	mA	—
Vref reference voltage		Vref	5.0	V	—
Power dissipation	Device alone	PD	1.3	W	(Note2)
	When mounted on a board		4.1	W	(Note3)
Operating temperature		TOPR	-20 to 85	°C	—
Storage temperature		TSTG	-55 to 150	°C	—
Junction temperature		Tj(Max)	150	°C	—

Note 1: The maximum current value in the normal operation should be set 70 % or less of the absolute maximum ratings after thermal calculation. The maximum output current may be further limited in view of thermal considerations, depending on the ambient temperature and the board conditions.
Note 2: Device alone. (Ta =25 °C)
If the ambient temperature is above 25 °C, the power dissipation must be de-rated by 10.4 mW/°C.
Note 3: 4 layer glass epoxy board (Board size: 100mm × 110mm × 1.6mm, Ta =25 °C)
If the ambient temperature is above 25 °C, the power dissipation must be de-rated by 32.8 mW/°C.

Ta : Ambient temperature
Topr : Ambient temperature while the IC is active
Tj : Junction temperature while the IC is active. The maximum junction temperature is limited by the thermal shutdown (TSD) circuitry. It is recommended to keep the maximum current below a certain level so that the maximum junction temperature (Tj (Max)) will not exceed 120 °C.

Caution: Absolute maximum ratings

The absolute maximum ratings of a semiconductor device are a set of ratings that must not be exceeded, even for a moment. Do not exceed any of these ratings.
Exceeding the rating (s) may cause device breakdown, damage or deterioration, and may result in injury by explosion or combustion.
The value of even one parameter of the absolute maximum ratings should not be exceeded under any circumstances. The TB67S512FTAG does not have overvoltage detection circuit. Therefore, the device is damaged if a voltage exceeding its rated maximum is applied.
All voltage ratings, including supply voltages, must always be followed. The other notes and considerations described later should also be referred to.

©2026
Toshiba Electronic Devices & Storage Corporation

Downloaded from Arrow.com.

PD-Ta graph (Device alone / Mounted to board) (For reference only)

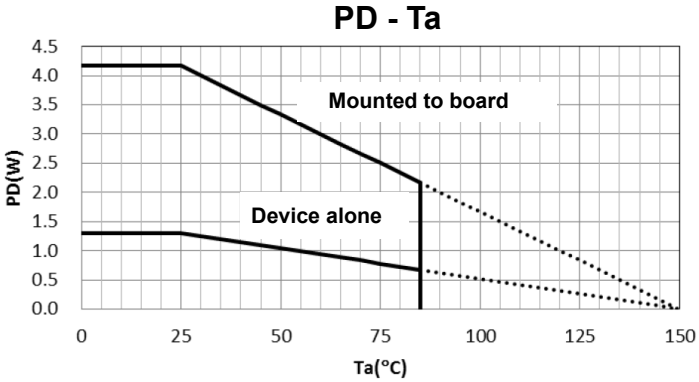

Board condition
4 layer glass epoxy board
Cu thickness:1 layer and 4 layer:55 mm,2 layer and 3 layer:35 mm
Board size:100 mm × 110 mm × 1.6 mm

Figure7.1 (For reference) PD-Ta graph

©2026
Toshiba Electronic Devices & Storage Corporation

Downloaded from Arrow.com.

8. Operating Ranges

Table 8.1 Operating Ranges (Ta=-20 to 85°C)

Characteristics	Symbol	Min	Typ.	Max	Unit	Remarks
Motor power supply	VM	10	24	35	V	—
Motor output current	IOUT	—	0.8	1.2	A	(Note1)
Logic input voltage	VIN (H)	2.0	—	5.5	V	Logic input High Level
	VIN (L)	0	—	0.8	V	Logic input Low Level
MO output voltage	VMO	—	3.3	5.0	V	—
CLK input frequency	fCLK	—	—	100	kHz	—
Chopping frequency	fchop (range)	40	70	150	kHz	—
Vref input voltage	Vref	0.5	2.0	3.6	V	—

Note1: Maximum current for actual usage may be limited by the operating circumstances such as operating conditions (exciting mode, operating time, and so on), ambient temperature, and heat conditions (board condition and so on). Please confirm the maximum usage current by thermal calculation under the usage circumstances.

©2026
Toshiba Electronic Devices & Storage Corporation

Downloaded from Arrow.com.

9. Electrical Characteristics

9.1. Electrical Specifications 1 (Ta = 25 °C, VM = 24 V, unless specified otherwise)

Table 9.1 Electrical Characteristics 1

Characteristics		Symbol	Test condition	Min	Typ.	Max	Unit
Logic input voltage	HIGH	VIN(H)	Logic input (Note)	2.0	—	5.5	V
	LOW	VIN(L)	Logic input (Note)	0	—	0.8	V
Logic input hysteresis voltage		VIN(HYS)	Logic input (Note)	100	—	300	mV
Logic input current	HIGH	IIN(H)	VIN(H) = 3.3 V	—	33	—	μA
	LOW	IIN(L)	VIN(L) = 0 V	—	—	1	μA
MO output voltage	LOW	VOL(MO)	IOL = 24 mA, Output: Low	—	0.2	0.5	V
Power consumption		IM1	Output pins = open STANDBY = L	—	2.5	3.5	mA
		IM2	Output pins = open STANDBY = H	—	4.0	5.5	mA
		IM3	Output pins = open (Full step resolution)	—	5	7	mA
Output leakage current	Upper	IOH	VRS = VM = 40 V, Vout = 0 V	—	—	1	μA
	Lower	IOL	VRS = VM = Vout = 40 V	1	—	—	μA
Motor current channel differential		ΔIOUT1	Current differential between Ch Iout = 1.0 A	-5	0	5	%
Motor current setting accuracy		ΔIOUT2	IOUT = 1.0 A	-5	0	5	%
RS pin current		IRS	VRS = VM = 24 V	0	—	27	μA
Motor output ON-resistance between drain and source (Upper-side + Lower-side)		Ron(H+L)	Tj = 25 °C, Forward direction (Upper-side + Lower-side) Design value	—	0.8	0.88	Ω

Note: VIN(H) is defined as the VIN voltage that makes the outputs (OUTA and OUTB) change when the test pin voltage is gradually raised from 0 V. VIN(L) is defined as the VIN voltage that makes the outputs (OUTA and OUTB) change when the test pin voltage is gradually lowered from 5 V. The difference between VIN (H) and VIN (L) is defined as the VIN (HYS).

Note: When the logic signal is input to the device while the VM is not supplied, the device is designed not to generate EMF and the leakage current. However, for safe usage, please control the logic signal to prevent motor operation by VM resupply.

©2026
Toshiba Electronic Devices & Storage Corporation

Downloaded from Arrow.com.

9.2. Electrical Specifications 2 (Ta =25 °C, VM = 24 V, unless specified otherwise)

Table 9.2 Electrical Characteristics 2

Characteristics	Symbol	Test condition	Min	Typ.	Max	Unit
Vref input current	Iref	VREF = 2.0 V	—	0	1	μA
VCC voltage	VCC	ICC = 5.0 mA	4.75	5.0	5.25	V
VCC current	ICC	VCC = 5.0 V	—	2.5	5	mA
Vref gain rate	Vref(gain)	VREF = 2.0 V	1/5.2	1/5.0	1/4.8	—
Thermal shutdown (TSD) threshold (Note1)	TjTSD	—	145	160	175	°C
VM recovery voltage	VMR	—	7.0	8.0	9.0	V
Over current detection (ISD) threshold (Note2)	ISD	Design value	2.5	3.2	4.0	A

Note1: Thermal shutdown circuit (TSD)
When the junction temperature of the device reaches the TSD threshold, the TSD circuit is triggered; the internal reset circuit then turns off the output transistors. Noise rejection blanking time is built-in to avoid misdetection. Once the TSD circuit is triggered, the device will be set to standby mode, and can be cleared by reasserting the VM power source, or setting the DMODE pins to standby mode. The TSD circuit is a backup function to detect a thermal error, therefore is not recommended to be used aggressively.

Note2: Over current detection (ISD)
When the output current reaches the threshold, the ISD circuit is triggered; the internal reset circuit then turns off the output transistors. Noise rejection blanking time is built-in to avoid misdetection occurred by switching. Once the ISD circuit is triggered, the device keeps the output off until power-on reset (POR), is reasserted or the device is set to standby mode by DMODE pins. For fail-safe, please insert a fuse to avoid secondary trouble.

Back-EMF
While a motor is rotating, there is a timing at which power is fed back to the power supply. At that timing, the motor current recirculates back to the power supply due to the effect of the motor back-EMF.
If the power supply does not have enough sink capability, the power supply and output pins of the device might rise above the rated voltages. The magnitude of the motor back-EMF varies with usage conditions and motor characteristics.

Cautions on Overcurrent Shutdown (ISD) and Thermal Shutdown (TSD)
The ISD and TSD circuits are only intended to provide temporary protection against irregular conditions such as an output short-circuits; they do not necessarily guarantee the complete IC safety.
If the device is used beyond the specified operating ranges, these circuits may not operate properly: then the device may be damaged due to an output short-circuit.
The ISD circuit is only intended to provide a temporary protection against an output short-circuit. If such a condition persists for a long time, the device may be damaged due to overstress. Overcurrent conditions must be removed immediately by external hardware.

IC Mounting
Do not insert devices incorrectly or in the wrong orientation. Otherwise, it may cause breakdown, damage and/or deterioration of the device.

Downloaded from Arrow.com.

9.3. AC Electrical Specification (Ta = 25 °C, VM = 24 V, Output Load = 6.8 mH/5.7 Ω)

Table 9.3 AC Electrical Characteristics

Characteristics	Symbol	Test condition	Min	Typ.	Max	Unit
CLK (clock) input frequency	fCLK	fOSC = 1600 kHz	—	—	100	kHz
Minimum width of internal filter for CLK input (output: High)	TCLK(H)	Minimum input term for High output	300	—	—	ns
Minimum width of internal filter for CLK input (output: Low)	TCLK(L)	Minimum input term for Low output	250	—	—	
Output transistor switching characteristics	tr	—	150	200	250	ns
	tf	—	100	150	200	
	tpLH(CLK)	Between CLK and output voltage	—	1000	—	
	tpHL(CLK)	Between CLK and output voltage	—	1500	—	
Blanking time for noise reduction	AtBLK	VM = 24 V, IOUT = 1.5 A Analog tblank	450	700	950	ns
OSCM oscillation frequency	fOSCM	C_{OSC} = 270 pF, R_{OSC} = 3.6 kΩ	1200	1600	2000	kHz
Chopping frequency	fchop	Output: Active (IOUT = 1.5 A), fOSCM = 1600 kHz	—	100	—	kHz

AC Electrical Specification Timing chart

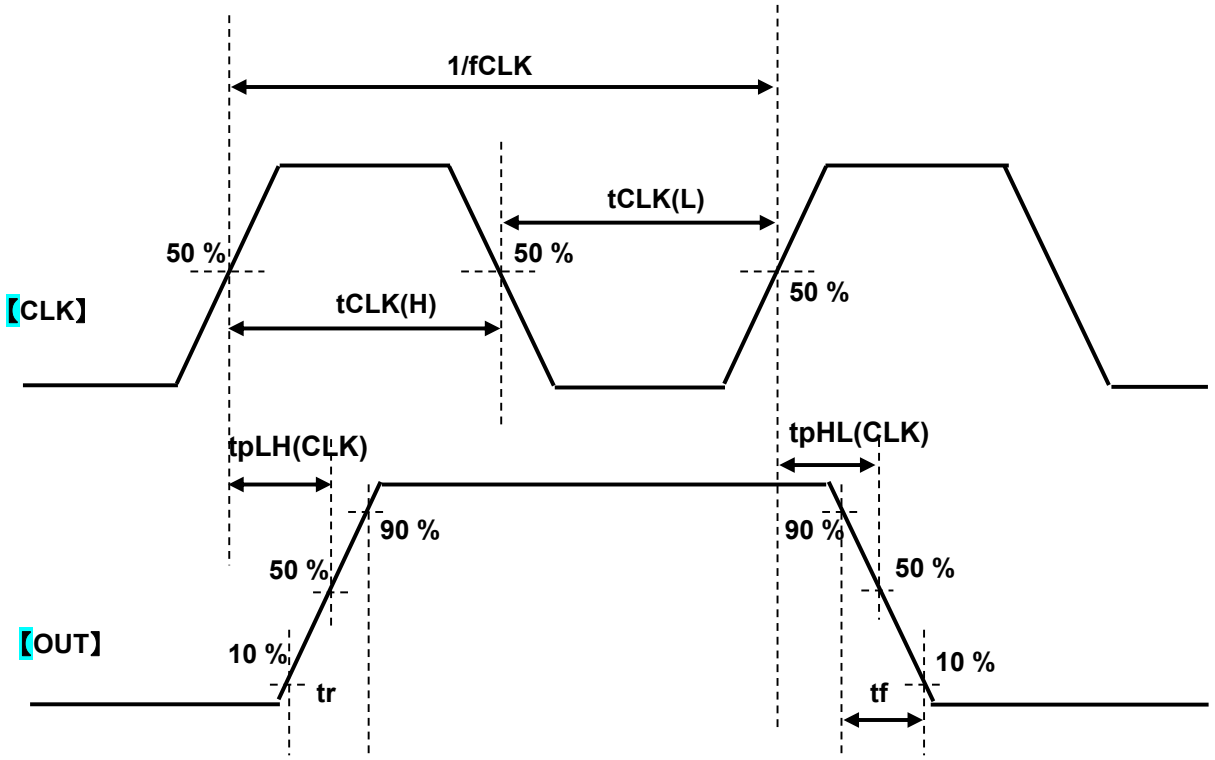

Figure 9.1 AC Electrical Specification Timing chart

Note: Timing charts may be simplified for explanatory purpose.

Downloaded from Arrow.com.

10. Example Application Circuits

The values in the following figure are recommended values.

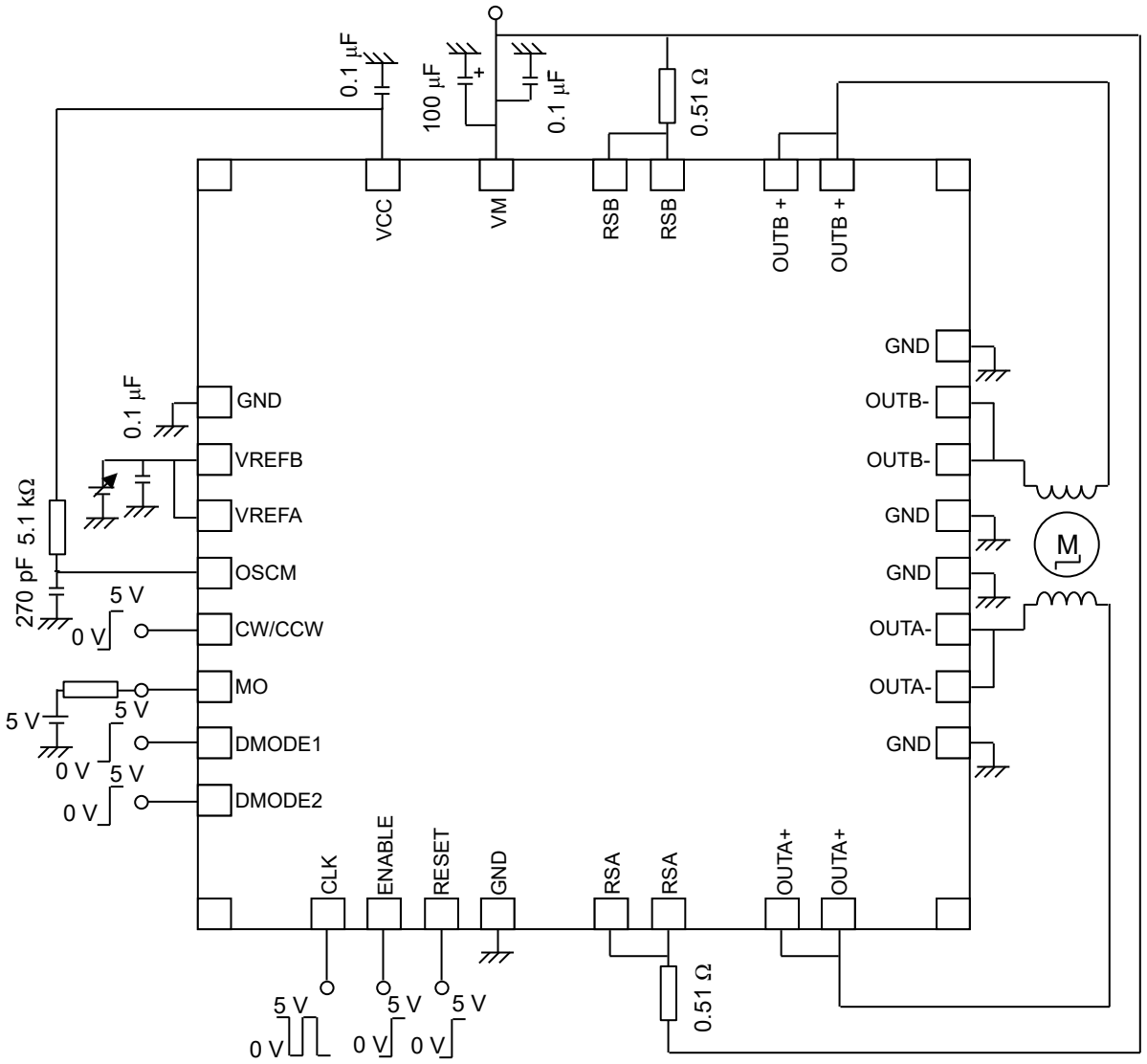

Figure 10.1 Example Application Circuits

Note: The addition of a bypass capacitor is recommended if necessary. The GND wiring should be connected to one point as much as possible.

The application circuit shown above is provided for reference purposes only. Thorough evaluation is required, especially at the mass production design stage.
Toshiba does not grant any license to any industrial property rights by providing these examples of application circuits.

©2026
Toshiba Electronic Devices & Storage Corporation

Downloaded from Arrow.com.

11. Package Information

11.1. P-WQFN48-0707-0.50-003 (unit :mm)

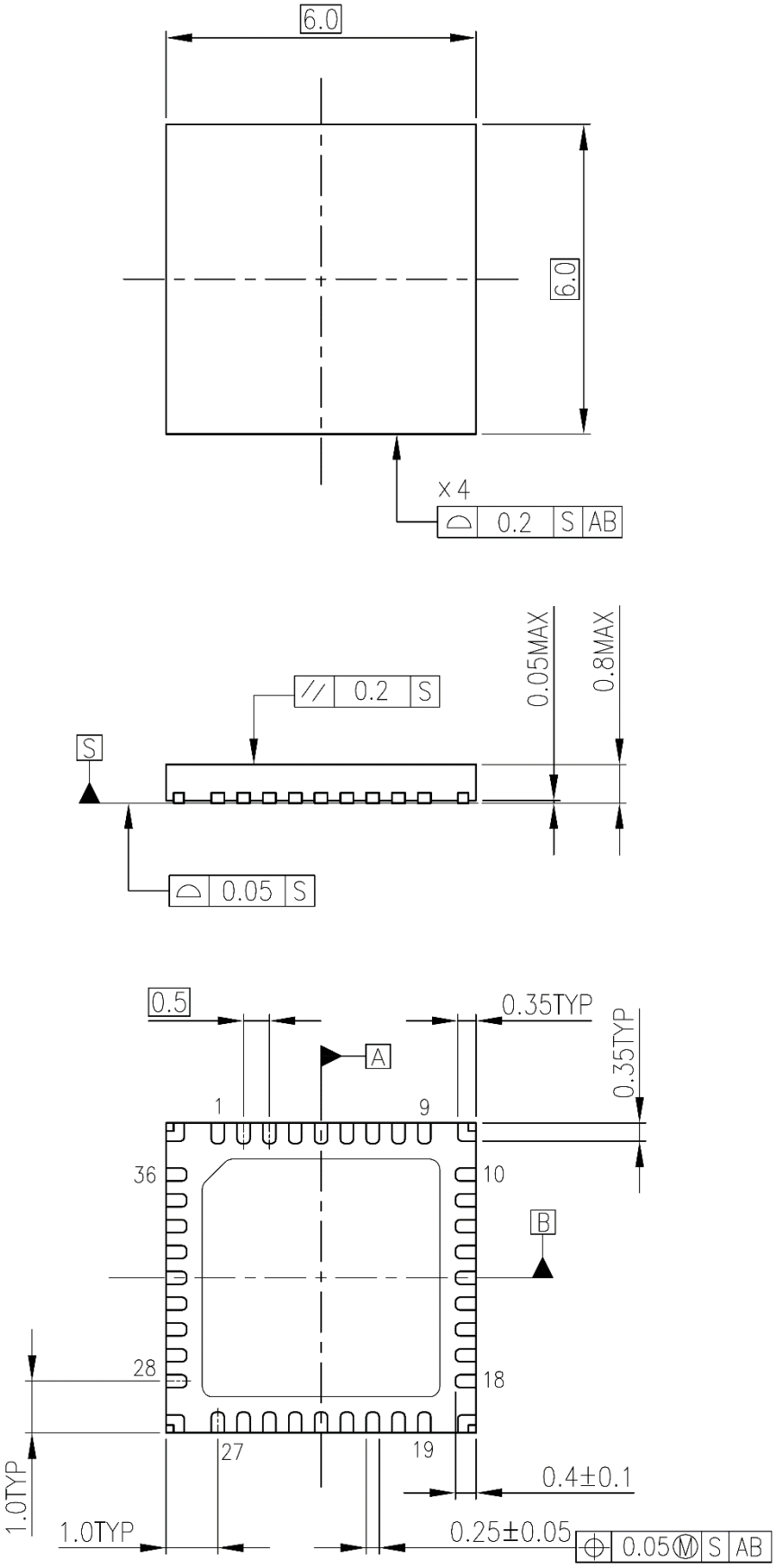

Weight: 0.1 g (Typ.)

Downloaded from Arrow.com.

Notes on Contents

1. Block Diagrams
   Some of the functional blocks, circuits, or constants in the block diagram may be omitted or simplified for explanatory purposes.

2. Equivalent Circuits
   The equivalent circuit diagrams may be simplified or some parts of them may be omitted for explanatory purposes.

3. Timing Charts
   Timing charts may be simplified for explanatory purposes.

4. Application Circuits
   The application circuits shown in this document are provided for reference purposes only. Thorough evaluation is required, especially at the mass-production design stage.
   Toshiba does not grant any license to any industrial property rights by providing these examples of application circuits.

5. Test Circuits
   Components in the test circuits are used only to obtain and confirm the device characteristics. These components and circuits are not guaranteed to prevent malfunction or failure from occurring in the application equipment.

©2026
Toshiba Electronic Devices & Storage Corporation

Downloaded from Arrow.com.

12. IC Usage Considerations

12.1. Notes on handling of ICs

(1) The absolute maximum ratings of a semiconductor device are a set of ratings that must not be exceeded, even for a moment. Do not exceed any of these ratings. Exceeding the rating(s) may cause device breakdown, damage or deterioration, and may result in injury by explosion or combustion.

(2) Do not insert devices in the wrong orientation or incorrectly. Make sure that the positive and negative terminals of power supplies are connected properly.
Otherwise, the current or power consumption may exceed the absolute maximum rating, and exceeding the rating(s) may cause device breakdown, damage or deterioration, and may result in injury by explosion or combustion.
In addition, do not use any device inserted in the wrong orientation or incorrectly to which current is applied even just once.

(3) Use an appropriate power supply fuse to ensure that a large current does not continuously flow in the case of overcurrent and/or IC failure. The IC will fully break down when used under conditions that exceed its absolute maximum ratings, when the wiring is routed improperly or when an abnormal pulse noise occurs from the wiring or load, causing a large current to continuously flow and the breakdown can lead to smoke or ignition. To minimize the effects of the flow of a large current in the case of breakdown, appropriate settings, such as fuse capacity, fusing time and insertion circuit location, are required.

(4) If your design includes an inductive load such as a motor coil, incorporate a protection circuit into the design to prevent device malfunction or breakdown caused by the current resulting from the inrush current at power ON or the negative current resulting from the back electromotive force at power OFF. IC breakdown may cause injury, smoke or ignition. Use a stable power supply with ICs with built-in protection functions. If the power supply is unstable, the protection function may not operate, causing IC breakdown. IC breakdown may cause injury, smoke or ignition.

(5) Carefully select external components (such as inputs and negative feedback capacitors) and load components (such as speakers), for example, power amp and regulator.
If there is a large amount of leakage current such as from input or negative feedback capacitor, the IC output DC voltage will increase. If this output voltage is connected to a speaker with low input withstand voltage, overcurrent or IC failure may cause smoke or ignition. (The overcurrent may cause smoke or ignition from the IC itself.) In particular, please pay attention when using a Bridge Tied Load (BTL) connection-type IC that inputs output DC voltage to a speaker directly.

©2026
Toshiba Electronic Devices & Storage Corporation

Downloaded from Arrow.com.

12.2. Points to remember on handling of Ics

Overcurrent detection Circuit

Overcurrent detection circuits (referred to as current limiter circuits) do not necessarily protect ICs under all circumstances. If the overcurrent detection circuits operate against the overcurrent, clear the overcurrent status immediately.
Depending on the method of use and usage conditions, exceeding absolute maximum ratings may cause the overcurrent detection circuit to operate improperly or IC breakdown may occur before operation. In addition, depending on the method of use and usage conditions, if overcurrent continues to flow for a long time after operation, the IC may generate heat resulting in breakdown.

Thermal Shutdown Circuit

Thermal shutdown circuits do not necessarily protect ICs under all circumstances. If the thermal shutdown circuits operate against the over-temperature, clear the heat generation status immediately.
Depending on the method of use and usage conditions, exceeding absolute maximum ratings may cause the thermal shutdown circuit to operate improperly or IC breakdown to occur before operation.

Heat Radiation Design

When using an IC with large current flow such as power amp, regulator or driver, design the device so that heat is appropriately radiated, in order not to exceed the specified junction temperature (TJ) at any time or under any condition. These ICs generate heat even during normal use. An inadequate IC heat radiation design can lead to decrease in IC life, deterioration of IC characteristics or IC breakdown. In addition, when designing the device, take into consideration the effect of IC heat radiation with peripheral components.

Back-EMF

When a motor rotates in the reverse direction, stops or slows abruptly, current flows back to the motor's power supply owing to the effect of back-EMF. If the current sink capability of the power supply is small, the device's motor power supply and output pins might be exposed to conditions beyond the absolute maximum ratings. To avoid this problem, take the effect of back-EMF into consideration in system design.

©2026
Toshiba Electronic Devices & Storage Corporation

Downloaded from Arrow.com.

13. RESTRICTIONS ON PRODUCT USE

Toshiba Corporation and its subsidiaries and affiliates are collectively referred to as “TOSHIBA”.
Hardware, software and systems described in this document are collectively referred to as “Product”.

- TOSHIBA reserves the right to make changes to the information in this document and related Product without notice.
- This document and any information herein may not be reproduced without prior written permission from TOSHIBA. Even with TOSHIBA's written permission, reproduction is permissible only if reproduction is without alteration/omission.
- Though TOSHIBA works continually to improve Product's quality and reliability, Product can malfunction or fail. Customers are responsible for complying with safety standards and for providing adequate designs and safeguards for their hardware, software and systems which minimize risk and avoid situations in which a malfunction or failure of Product could cause loss of human life, bodily injury or damage to property, including data loss or corruption. Before customers use the Product, create designs including the Product, or incorporate the Product into their own applications, customers must also refer to and comply with (a) the latest versions of all relevant TOSHIBA information, including without limitation, this document, the specifications, the data sheets and application notes for Product and the precautions and conditions set forth in the "TOSHIBA Semiconductor Reliability Handbook" and (b) the instructions for the application with which the Product will be used with or for. Customers are solely responsible for all aspects of their own product design or applications, including but not limited to (a) determining the appropriateness of the use of this Product in such design or applications; (b) evaluating and determining the applicability of any information contained in this document, or in charts, diagrams, programs, algorithms, sample application circuits, or any other referenced documents; and (c) validating all operating parameters for such designs and applications. **TOSHIBA ASSUMES NO LIABILITY FOR CUSTOMERS' PRODUCT DESIGN OR APPLICATIONS.**
- **PRODUCT IS NEITHER INTENDED NOR WARRANTED FOR USE IN EQUIPMENTS OR SYSTEMS THAT REQUIRE EXTRAORDINARILY HIGH LEVELS OF QUALITY AND/OR RELIABILITY, AND/OR A MALFUNCTION OR FAILURE OF WHICH MAY CAUSE LOSS OF HUMAN LIFE, BODILY INJURY, SERIOUS PROPERTY DAMAGE AND/OR SERIOUS PUBLIC IMPACT ("UNINTENDED USE").** Except for specific applications as expressly stated in this document, Unintended Use includes, without limitation, equipment used in nuclear facilities, equipment used in the aerospace industry, Class 3 medical devices, equipment used for automobiles, and military vehicles and munitions. **IF YOU USE PRODUCT FOR UNINTENDED USE, TOSHIBA ASSUMES NO LIABILITY FOR PRODUCT.** For details, please contact your TOSHIBA sales representative or contact us via our website.
- Do not disassemble, analyze, reverse-engineer, alter, modify, translate or copy Product, whether in whole or in part.
- Product shall not be used for or incorporated into any products or systems whose manufacture, use, or sale is prohibited under any applicable laws or regulations.
- The information contained herein is presented only as guidance for Product use. No responsibility is assumed by TOSHIBA for any infringement of patents or any other intellectual property rights of third parties that may result from the use of Product. No license to any intellectual property right is granted by this document, whether express or implied, by estoppel or otherwise.
- **ABSENT A WRITTEN SIGNED AGREEMENT, EXCEPT AS PROVIDED IN THE RELEVANT TERMS AND CONDITIONS OF SALE FOR PRODUCT, AND TO THE MAXIMUM EXTENT ALLOWABLE BY LAW, TOSHIBA (1) ASSUMES NO LIABILITY WHATSOEVER, INCLUDING WITHOUT LIMITATION, INDIRECT, CONSEQUENTIAL, SPECIAL, OR INCIDENTAL DAMAGES OR LOSS, INCLUDING WITHOUT LIMITATION, LOSS OF PROFITS, LOSS OF OPPORTUNITIES, BUSINESS INTERRUPTION AND LOSS OF DATA, AND (2) DISCLAIMS ANY AND ALL EXPRESS OR IMPLIED WARRANTIES AND CONDITIONS RELATED TO SALE, USE OF PRODUCT, OR INFORMATION, INCLUDING WARRANTIES OR CONDITIONS OF MERCHANTABILITY, FITNESS FOR A PARTICULAR PURPOSE, ACCURACY OF INFORMATION, OR NONINFRINGEMENT.**
- Do not use or otherwise make available Product or related software or technology for any military purposes, including without limitation, for the design, development, use, stockpiling or manufacturing of nuclear, chemical, or biological weapons or missile technology products (mass destruction weapons). Product and related software and technology may be controlled under the applicable export laws and regulations including, without limitation, the Japanese Foreign Exchange and Foreign Trade Law and the U.S. Export Administration Regulations. Export and re-export of Product or related software or technology are strictly prohibited except in compliance with all applicable export laws and regulations.
- Please contact your TOSHIBA sales representative for details as to environmental matters such as the RoHS compatibility of Product. Please use Product in compliance with all applicable laws and regulations that regulate the inclusion or use of controlled substances, including without limitation, the EU RoHS Directive. **TOSHIBA ASSUMES NO LIABILITY FOR DAMAGES OR LOSSES OCCURRING AS A RESULT OF NONCOMPLIANCE WITH APPLICABLE LAWS AND REGULATIONS.**

Toshiba Electronic Devices & Storage Corporation
https://toshiba.semicon-storage.com/

©2026
Toshiba Electronic Devices & Storage Corporation

Downloaded from Arrow.com.