Overview

The low ESR, surge-robust High Reliability Series (HRA) T495 is designed for demanding applications that require high surge current and high ripple current capability. This T495 is approved for DLA Drawing 95158, incorporating an intensive testing and screening protocol that is customizable depending on specific customer requirements. This series offers several advantages such as low ESR, high ripple current capability, excellent capacitance stability, and improved resistance to high in-rush currents. These benefits are achieved through a combination of proprietary design, materials, and process parameters, as well as high-stress, low impedance electrical conditioning performed prior to screening.

Benefits

- Approved for DLA Drawing 95158
- Meets or exceeds EIA standard 535BAAC
- Taped and reeled per EIA 481
- High surge current capability
- Optional gold-plated terminations
- High ripple current capability
- 100% surge current test
- 100% steady-state accelerated aging

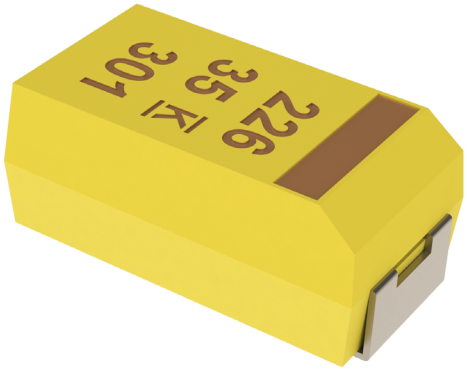

Applications

Typical applications include decoupling and filtering in defense applications, such as DC/DC converters, portable electronics, telecommunications, and control units requiring high ripple current capability.

Environmental Compliance

RoHS compliant when ordered with 100% Sn solder.
- Halogen-free
- Epoxy compliant with UL94 V–0
- Molded Epoxy complies for outgassing testing under ASTM E 595.

Downloaded from Arrow.com.

K-SIM

For a detailed analysis of specific part numbers, please visit ksim.kemet.com to access KEMET's K-SIM software. KEMET K-SIM is designed to simulate behavior of components with respect to frequency, ambient temperature, and DC bias levels.

Ordering Information

T	495	X	107	M	010	A	H	4095	
Capacitor Class	Series	Case Size	Capacitance Code (pF)	Capacitance Tolerance	Rated Voltage (VDC)	Failure Rate/ Design	Termination Finish	Customer Specification	Packaging (C-Spec)
T = Tantalum	Surge robust low ESR	C D X	First two digits represent significant figures. Third digit specifies number of zeros.	K = ±10% M = ±20%	006 = 6.3 010 = 10 016 = 16 020 = 20 025 = 25 035 = 35 050 = 50	A = N/A	H = Standard solder-coated (SnPb 5% Pb minimum) B = Gold-plated N = Non-magnetic 100% tin (Sn) M = Non-magnetic (SnPb)	Tested to meet the Established Reliability	Blank = 7" reel 7280 = 13" reel 7610 = Bulk bag 7640 = Bulk plastic box WAFL = Waffle pack

Ordering Information – DLA Drawing 95158

95158-	07	M	H
Drawing Number	Dash Number	Capacitance Tolerance	Termination Finish
Capacitor, Fixed, Tantalum Chip, Low ESR	See Part Number List	K = ±10% M = ±20%	H = Solder plated B= Gold-plated

Performance Characteristics

Item	Performance Characteristics
Operating Temperature	−55°C to 125°C
Rated Capacitance Range	4.7 – 220 µF at 120 Hz/25° C
Capacitance Tolerance	K tolerance (10%), M tolerance (20%)
Rated Voltage Range	6 – 50 V
DF (120 Hz)	Refer to Part Number Electrical Specification Table
ESR (100 kHz)	Refer to Part Number Electrical Specification Table
Leakage Current	Refer to Part Number Electrical Specification Table

Downloaded from Arrow.com.

Qualification

Test	Condition	Characteristics			
Endurance	85°C at rated voltage, 2,000 hours 125°C at 2/3 rated voltage, 2,000 hours	Δ C/C	Within ±10% of initial value		
		DF	Within initial limits		
		DCL	Within 1.25 x initial limit		
		ESR	Within initial limits		
Moisture Resistance	65°C to −10°C, 100% RH, 20 cycles, no load	Δ C/C	Within +/−15% of initial value		
		DF	Within 150 x initial limit		
		DCL	Within 200 x initial limit		
Thermal Shock	MIL–STD–202, Method 107, Condition B, mounted, −55°C to 125°C, 1,000 cycles	Δ C/C	Within ±5% of initial value		
		DF	Within initial limits		
		DCL	Within 1.25 x initial limit		
		ESR	Within initial limits		
Temperature Stability	Extreme temperature exposure at a succession of continuous steps at +25°C, −55°C, +25°C, +85°C, +125°C, +25°C		+25°C	−55°C	+85°C	+125°C
		Δ C/C	IL*	±10%	±10%	±20%
		DF	IL	IL	1.5 x IL	1.5 x IL
		DCL	IL	n/a	10 x IL	12 x IL
Resistance to Solder Heat	MIL–STD–202, Method 210, 1 cycle	Δ C/C	Within ±5% of initial value		
		DF	Within initial limits		
		DCL	Within initial limits		
Surge Voltage	25°C and 85°C, 1.32 x rated voltage 1,000 cycles (125°C, 1.2 x rated voltage)	Δ C/C	Within ±5% of initial value		
		DF	Within initial limits		
		DCL	Within initial limits		
		ESR	Within initial limits		
Resistance to Solvents	MIL–STD–202, Method 215, Aqueous wash chemical or equivalent	Δ C/C	Within ±10 of initial value		
		DF	Within initial limits		
		DCL	Within initial limits		
Mechanical Shock/ Vibration	MIL–STD–202, Method 213, Condition I, 100 G peak MIL–STD–202, Method 204, Condition D, 10 Hz to 2,000 Hz, 20 G peak	Δ C/C	Within ±10% of initial value		
		DF	Within initial limits		
		DCL	Within initial limits		

**IL = Initial limit*

Certification

DLA Drawing 95158

Downloaded from Arrow.com.

Dimensions – Millimeters (Inches)

Metric will govern

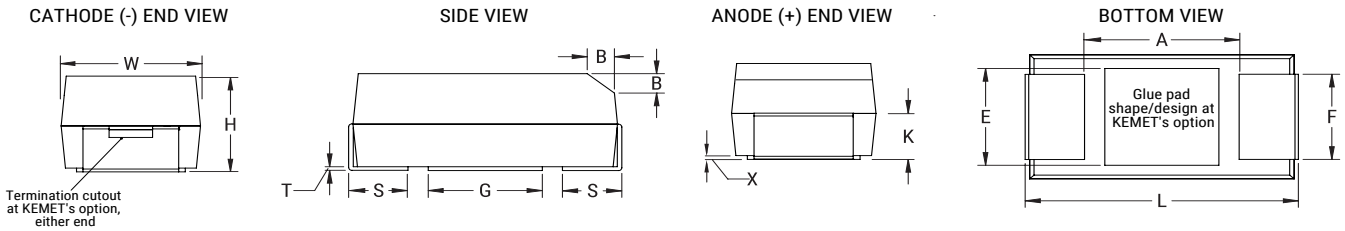

Case Code	Component											
KEMET	L	W	H	K ±0.20 ±(0.008) (Ref)	F ±0.1 ±(0.004) (Ref)	S ±0.3 ±(0.012) (Ref)	B ±0.15 ±(0.006) (Ref)	X ± 0.10 ±(0.004)(Ref)	T (Ref)	A (Min)	G (Ref)	E (Ref)
C	6.0±0.3 (0.236±0.012)	3.2±0.3 (0.126±0.012)	2.5±0.3 (0.098±0.012)	1.4 (0.055)	2.2 (0.087)	1.3 (0.051)	0.5 (0.020)	0.10 (0.004)	0.13 (0.005)	3.1 (0.122)	2.8 (0.110)	2.4 (0.094)
D	7.3±0.3 (0.287±0.012)	4.3±0.3 (0.169±0.012)	2.8±0.3 (0.110±0.012)	1.5 (0.059)	2.4 (0.094)	1.3 (0.051)	0.5 (0.020)	0.10 (0.004)	0.13 (0.005)	3.8 (0.150)	3.5 (0.138)	3.5 (0.138)
X	7.3±0.3 (0.287±0.012)	4.3±0.3 (0.169±0.012)	4.0±0.3 (0.157±0.012)	2.3 (0.091)	2.4 (0.094)	1.3 (0.051)	0.5 (0.020)	0.10 (0.004)	0.13 (0.005)	3.8 (0.150)	3.5 (0.138)	3.5 (0.138)

Weight

Case Size	Typical Weight (mg)
C/6032	224.48
D/7343	446.84
X/7343	652.04

These weights are provided as reference. If exact weights are needed, please contact your KEMET Sales Representative

Downloaded from Arrow.com.

Table 1 – Ratings & Part Number Reference

Rated Voltage	Rated Cap	Case Code/ Case Size	KEMET Part Number	DLA (DSCC) 95158/1	DC Leakage	DF	ESR	Maximum Allowable Ripple Current (rms)			Maximum Operating Temp.	MSL
VDC at 85°C	µF	KEMET/EIA	(See below for part options)	Drawing Number	µA +25°C Max./5 Min.	% at +25°C 120 Hz Max.	mΩ at 25°C 100 kHz Max.	mA at +25°C 100 kHz	mA at +85°C 100 kHz	mA at +125°C 100 kHz	°C	Reflow Temp ≤ 260°C
6.3	68	D/7343-31	T495D686(1)006A(2)4095	95158-01(1)(2)	3.3	4.0	175	926	833	370	125	1
6.3	150	X/7343-43	T495X157(1)006A(2)4095	95158-02(1)(2)	7.2	6.0	125	1149	1034	460	125	1
6.3	220	X/7343-43	T495X227(1)006A(2)4095	95158-03(1)(2)	13.2	8.0	100	1285	1157	514	125	1
6.3	220	D/7343-31	T495D227(1)006A(2)4095	95158-25(1)(2)	13.2	8.0	100	1225	1103	490	125	1
10	47	D/7343-31	T495D476(1)010A(2)4095	95158-04(1)(2)	3.8	4.0	200	866	779	346	125	1
10	68	X/7343-43	T495X686(1)010A(2)4095	95158-05(1)(2)	5.4	4.0	150	1049	944	420	125	1
10	100	D/7343-31	T495D107(1)010A(2)4095	95158-06(1)(2)	10.0	8.0	100	1225	1103	490	125	1
10	100	X/7343-43	T495X107(1)010A(2)4095	95158-07(1)(2)	8.0	6.0	100	1285	1157	514	125	1
10	150	X/7343-43	T495X157(1)010A(2)4095	95158-08(1)(2)	15.0	8.0	100	1285	1157	514	125	1
10	150	D/7343-31	T495D157(1)010A(2)4095	95158-26(1)(2)	15.0	8.0	100	1225	1103	490	125	1
10	220	X/7343-43	T495X227(1)010A(2)4095	95158-28(1)(2)	15.0	8.0	100	1285	1157	514	125	1
16	33	D/7343-31	T495D336(1)016A(2)4095	95158-09(1)(2)	4.2	4.0	250	775	698	310	125	1
16	47	D/7343-31	T495D476(1)016A(2)4095	95158-10(1)(2)	7.5	6.0	200	866	779	346	125	1
16	100	X/7343-43	T495X107(1)016A(2)4095	95158-11(1)(2)	16.0	8.0	125	1149	1034	460	125	1
20	15	D/7343-31	T495D156(1)020A(2)4095	95158-12(1)(2)	2.4	4.0	275	739	665	296	125	1
20	22	D/7343-31	T495D226(1)020A(2)4095	95158-13(1)(2)	3.5	4.0	275	739	665	296	125	1
20	47	X/7343-43	T495X476(1)020A(2)4095	95158-14(1)(2)	7.5	4.0	150	1049	944	420	125	1
20	68	X/7343-43	T495X686(1)020A(2)4095	95158-15(1)(2)	13.6	6.0	150	1049	944	420	125	1
25	15	D/7343-31	T495D156(1)025A(2)4095	95158-16(1)(2)	3.8	6.0	275	739	665	296	125	1
25	15	X/7343-43	T495X156(1)025A(2)4095	95158-17(1)(2)	3.0	4.0	200	908	817	363	125	1
25	22	X/7343-43	T495X226(1)025A(2)4095	95158-18(1)(2)	4.4	4.0	225	856	770	342	125	1
25	33	X/7343-43	T495X336(1)025A(2)4095	95158-19(1)(2)	6.6	4.0	175	971	874	388	125	1
35	4.7	C/6032-28	T495C475(1)035A(2)4095	95158-29(1)(2)	1.7	6.0	600	428	385	171	125	1
35	6.8	X/7343-43	T495X685(1)035A(2)4095	95158-20(1)(2)	1.9	4.0	300	742	668	297	125	1
35	10	D/7343-31	T495D106(1)035A(2)4095	95158-27(1)(2)	3.5	4.0	300	707	636	283	125	1
35	10	X/7343-43	T495X106(1)035A(2)4095	95158-21(1)(2)	2.8	4.0	250	812	731	325	125	1
35	15	X/7343-43	T495X156(1)035A(2)4095	95158-22(1)(2)	5.3	6.0	225	856	770	342	125	1
35	22	X/7343-43	T495X226(1)035A(2)4095	95158-23(1)(2)	7.7	6.0	300	742	668	297	125	1
50	4.7	X/7343-43	T495X475(1)050A(2)4095	95158-24(1)(2)	1.9	4.0	300	742	668	297	125	1
VDC at 85°C	µF	KEMET/EIA	(See below for part options)	Drawing Number	µA +25°C Max./5 Min.	% at +25°C 120 Hz Max.	mΩ at 25°C 100 kHz Max.	mA at +25°C 100 kHz	mA at +85°C 100 kHz	mA at +125°C 100 kHz	°C	Reflow Temp. ≤ 260°C
Rated Voltage	Rated Cap	Case Code/ Case Size	KEMET Part Number	DLA (DSCC) 95158/1	DC Leakage	DF	ESR	Maximum Allowable Ripple Current (rms)			Maximum Operating Temp.	MSL

(1) To complete KEMET part number, insert M for ±20% or K for ±10%. Designates Capacitance tolerance.
(2) To complete KEMET part number, insert B = Gold-plated, H = Standard Solder coated (SnPb 5% Pb minimum), N = Non-Magnetic 100% Tin (Sn) or M = Non-Magnetic (SnPb). Designates Termination Finish.
Refer to Ordering Information for additional detail.

Downloaded from Arrow.com.

Recommended Voltage Derating Guidelines

	−55°C to 85°C	85°C to 125°C
% Change in working DC voltage with temperature	V_R	67% of V_R
Recommended maximum application voltage	50% of V_R	33% of V_R

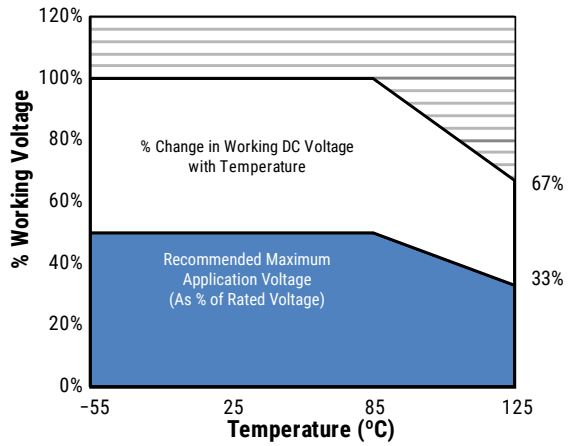

Ripple Current/Ripple Voltage

Permissible AC ripple voltage and current are related to equivalent series resistance (ESR) and the power dissipation capabilities of the device. Permissible AC ripple voltage which may be applied is limited by two criteria:

1. The positive peak AC voltage plus the DC bias voltage, if any, must not exceed the DC voltage rating of the capacitor.
2. The negative peak AC voltage in combination with bias voltage, if any, must not exceed the allowable limits specified for reverse voltage. See the Reverse Voltage section for allowable limits.

The maximum power dissipation by case size can be determined using the table at right. The maximum power dissipation rating stated in the table must be reduced with increasing environmental operating temperatures. Refer to the table below for temperature compensation requirements.

KEMET Case Code	EIA Case Code	Maximum Power Dissipation (Pmax) mWatts at 25°C with +20°C Rise
C	6032–28	110
D	7343–31	150
X	7343–43	165

Using the Pmax of the device, the maximum allowable rms ripple current or voltage may be determined.

$I(max) = \sqrt{Pmax/R}$
$E(max) = Z\sqrt{Pmax/R}$

I = rms ripple current (amperes)
E = rms ripple voltage (volts)
Pmax = maximum power dissipation (watts)
R = ESR at specified frequency (ohms)
Z = Impedance at specified frequency (ohms)

Temperature Compensation Multipliers for Maximum Ripple Current		
T ≤ 25°C	T ≤ 85°C	T ≤ 125°C
1.00	0.90	0.40

T= Environmental Temperature

The maximum power dissipation rating must be reduced with increasing environmental operating temperatures. Refer to the Temperature Compensation Multiplier table for details.

Downloaded from Arrow.com.

Reverse Voltage

Solid tantalum capacitors are polar devices and may be permanently damaged or destroyed if connected with the wrong polarity. The positive terminal is identified on the capacitor body by a stripe plus in some cases a beveled edge. A small degree of transient reverse voltage is permissible for short periods per the table. The capacitors should not be operated continuously in reverse mode, even within these limits.

Temperature	Permissible Transient Reverse Voltage
25°C	15% of Rated Voltage
85°C	5% of Rated Voltage
125°C	1% of Rated Voltage

Table 2 – Land Dimensions/Courtyard

KEMET	Metric Size Code	Density Level A: Maximum (Most) Land Protrusion (mm)					Density Level B: Median (Nominal) Land Protrusion (mm)					Density Level C: Minimum (Least) Land Protrusion (mm)				
Case	EIA	W	L	S	V1	V2	W	L	S	V1	V2	W	L	S	V1	V2
C	6032–28	2.35	2.77	2.37	8.92	4.50	2.23	2.37	2.57	7.82	4.00	2.13	1.99	2.73	6.96	3.74
D	7343–31	2.55	2.77	3.67	10.22	5.60	2.43	2.37	3.87	9.12	5.10	2.33	1.99	4.03	8.26	4.84
X[1]	7343–43	2.55	2.77	3.67	10.22	5.60	2.43	2.37	3.87	9.12	5.10	2.33	1.99	4.03	8.26	4.84

Density Level A: *For low-density product applications. Recommended for wave solder applications and provides a wider process window for reflow solder processes.*
Density Level B: *For products with a moderate level of component density. Provides a robust solder attachment condition for reflow solder processes.*
Density Level C: *For high component density product applications. Before adapting the minimum land pattern variations the user should perform qualification testing based on the conditions outlined in IPC standard 7351 (IPC–7351).*
[1] *Height of these chips may create problems in wave soldering.*

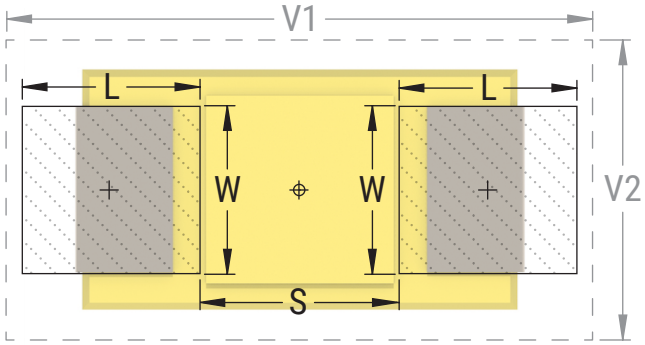

Grid Placement Courtyard

Downloaded from Arrow.com.

Soldering Process

The KEMET families of surface mount capacitors are compatible with wave (single or dual), convection, IR, or vapor phase reflow techniques. Preheating of these components is recommended to avoid extreme thermal stress. KEMET's recommended profile conditions for convection and IR reflow reflect the profile conditions of the IPC/J–STD–020D standard for moisture sensitivity testing. The devices can safely withstand a maximum of three reflow passes at these conditions.

Please note that although the X/7343–43 case size can withstand wave soldering, the tall profile (4.3 mm maximum) dictates care in wave process development.

Hand soldering should be performed with care due to the difficulty in process control. If performed, care should be taken to avoid contact of the soldering iron to the molded case. The iron should be used to heat the solder pad, applying solder between the pad and the termination, until reflow occurs. Once reflow occurs, the iron should be removed immediately. “Wiping” the edges of a chip and heating the top surface is not recommended.

During typical reflow operations, a slight darkening of the gold-colored epoxy may be observed. This slight darkening is normal and not harmful to the product. Marking permanency is not affected by this change.

Profile Feature	SnPb Assembly	Pb-Free Assembly
Preheat/Soak		
Temperature Minimum (T_{Smin})	100°C	150°C
Temperature Maximum (T_{Smax})	150°C	200°C
Time (t_s) from T_{smin} to T_{smax})	60 – 120 seconds	60 – 120 seconds
Ramp-up Rate (T_L to T_P)	3°C/second maximum	3°C/second maximum
Liquidous Temperature (T_L)	183°C	217°C
Time Above Liquidous (t_L)	60 – 150 seconds	60 – 150 seconds
Peak Temperature (T_P)	220°C* 235°C**	250°C* 260°C**
Time within 5°C of Maximum Peak Temperature (t_p)	20 seconds maximum	30 seconds maximum
Ramp-down Rate (T_P to T_L)	6°C/second maximum	6°C/second maximum
Time 25°C to Peak Temperature	6 minutes maximum	8 minutes maximum

Note: All temperatures refer to the center of the package, measured on the package body surface that is facing up during assembly reflow.
** For Case Size height > 2.5 mm*
*** For Case Size height ≤ 2.5 mm*

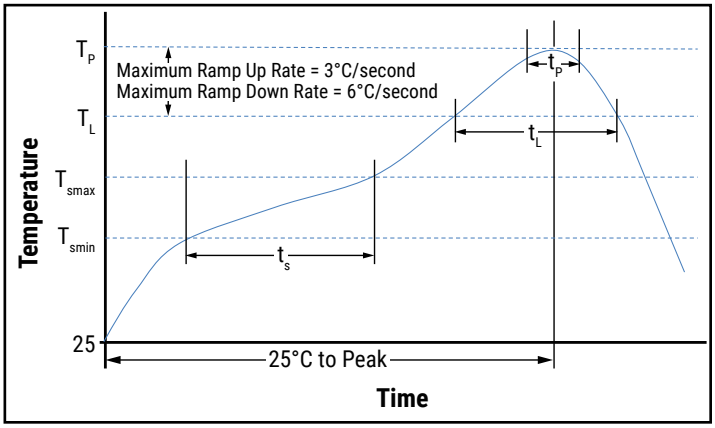

Storage

Tantalum chip capacitors should be stored in normal working environments. While the chips themselves are quite robust in other environments, solderability will be degraded by exposure to high temperatures, high humidity, corrosive atmospheres, and long term storage. In addition, packaging materials will be degraded by high temperature – reels may soften or warp and tape peel force may increase. KEMET recommends that maximum storage temperature not exceed 40°C and maximum storage humidity not exceed 60% relative humidity. Temperature fluctuations should be minimized to avoid condensation on the parts and atmospheres should be free of chlorine and sulphur bearing compounds. For optimized solderability, chip stock should be used promptly, preferably within three years of receipt.

Downloaded from Arrow.com.

Construction

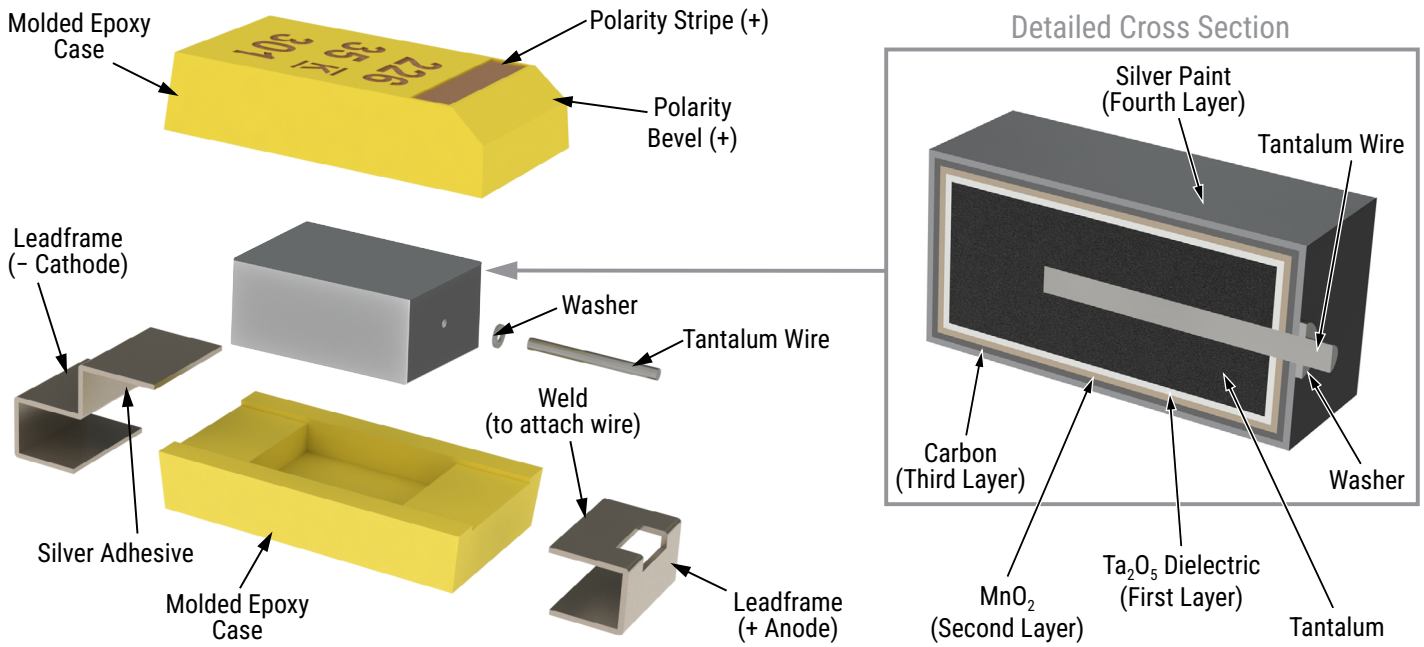

Capacitor Marking

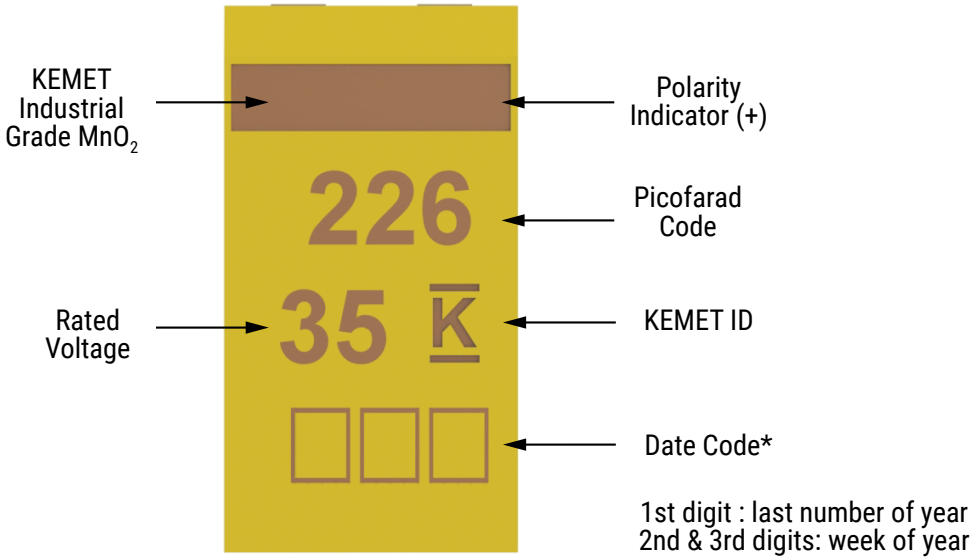

Downloaded from Arrow.com.

Tape & Reel Packaging Information

KEMET's molded chip capacitor families are packaged in 8 and 12 mm plastic tape on 7" and 13" reels in accordance with *EIA Standard 481*: Embossed Carrier Taping of Surface Mount Components for Automatic Handling. This packaging system is compatible with all tape-fed automatic pick-and-place systems.

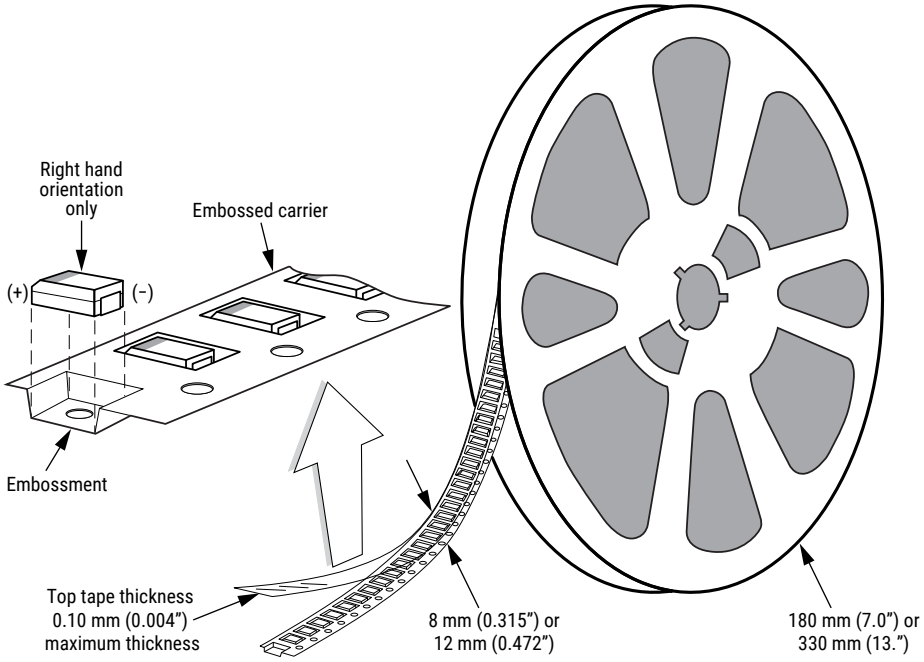

Table 3 – Packaging Quantity

Case Code		Tape Width (mm)	7" Reel*	13" Reel*
KEMET	EIA			
S	3216-12	8	2,500	10,000
T	3528-12	8	2,500	10,000
M	3528-15	8	2,500	8,000
U	6032-15	12	1,000	5,000
L	6032-19	12	1,000	3,000
W	7343-15	12	1,000	3,000
Z	7343-17	12	1,000	3,000
V	7343-20	12	1,000	3,000
A	3216-18	8	2,000	9,000
B	3528-21	8	2,000	8,000
C	6032-28	12	500	3,000
D	7343-31	12	500	2,500
Q	7343-12	12	1,000	3,000
Y	7343-40	12	500	2,000
X	7343-43	12	500	2,000
E/T428P	7360-38	12	500	2,000
H	7360-20	12	1,000	2,500
O	7360-43	12	250	1,000

** No C-Spec required for 7" reel packaging. C-7280 required for 13" reel packaging.*

Downloaded from Arrow.com.

Figure 1 – Embossed (Plastic) Carrier Tape Dimensions

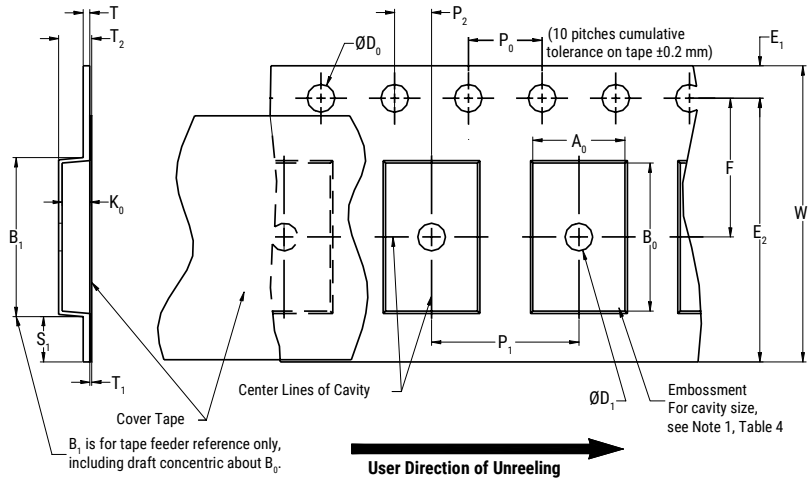

Table 4 – Embossed (Plastic) Carrier Tape Dimensions

Metric will govern

Constant Dimensions — Millimeters (Inches)									
Tape Size	D_0	D_1 Minimum Note 1	E_1	P_0	P_2	R Reference Note 2	S_1 Minimum Note 3	T Maximum	T_1 Maximum
8 mm	1.5 +0.10/−0.0 (0.059 +0.004/−0.0)	1.0 (0.039)	1.75 ±0.10 (0.069 ±0.004)	4.0 ±0.10 (0.157 ±0.004)	2.0 ±0.05 (0.079 ±0.002)	25.0 (0.984)	0.600 (0.024)	0.600 (0.024)	0.100 (0.004)
12 mm		1.5 (0.059)				30 (1.181)			

Variable Dimensions — Millimeters (Inches)								
Tape Size	Pitch	B_1 Maximum Note 4	E_2 Minimum	F	P_1	T_2 Maximum	W Maximum	A_0, B_0 & K_0
8 mm	Single (4 mm)	4.35 (0.171)	6.25 (0.246)	3.5 ±0.05 (0.138 ±0.002)	4.0 ±0.10 (0.157 ±0.004)	2.5 (0.098)	8.3 (0.327)	Note 5
12 mm	Single (4 mm) and Double (8 mm)	8.2 (0.323)	10.25 (0.404)	5.5 ±0.05 (0.217 ±0.002)	4.0 ±0.10 (0.157 ±0.004) or 8.0 ±0.10 (0.315 ±0.004)	4.6 (0.181)	12.3 (0.484)	

1. *The embossment hole location shall be measured from the sprocket hole controlling the location of the embossment. Dimensions of embossment location and hole location shall be applied independent of each other.*
2. *The tape, with or without components, shall pass around R without damage (see Figure 4).*
3. *If S_1 < 1.0 mm, there may not be enough area for cover tape to be properly applied (see EIA Standard 481–D, paragraph 4.3, section b).*
4. *B_1 dimension is a reference dimension for tape feeder clearance only.*
5. *The cavity defined by A_0, B_0 and K_0 shall surround the component with sufficient clearance that:*
   (a) the component does not protrude above the top surface of the carrier tape.
   (b) the component can be removed from the cavity in a vertical direction without mechanical restriction, after the top cover tape has been removed.
   (c) rotation of the component is limited to 20° maximum for 8 and 12 mm tapes (see Figure 2).
   (d) lateral movement of the component is restricted to 0.5 mm maximum for 8 mm and 12 mm wide tape (see Figure 3).
   (e) see Addendum in EIA Standard 481–D for standards relating to more precise taping requirements.

Downloaded from Arrow.com.

Packaging Information Performance Notes

1. Cover tape break force: 1.0 kg minimum.
2. Cover tape peel strength: The total peel strength of the cover tape from the carrier tape shall be:

Tape Width	Peel Strength
8 mm	0.1 to 1.0 newton (10 to 100 gf)
12 mm	0.1 to 1.3 newton (10 to 130 gf)

The direction of the pull shall be opposite the direction of the carrier tape travel. The pull angle of the carrier tape shall be 165° to 180° from the plane of the carrier tape. During peeling, the carrier and/or cover tape shall be pulled at a velocity of 300 ±10 mm/minute.
3. Labeling: Bar code labeling (standard or custom) shall be on the side of the reel opposite the sprocket holes. *Refer to EIA Standards 556 and 624*.

Figure 2 – Maximum Component Rotation

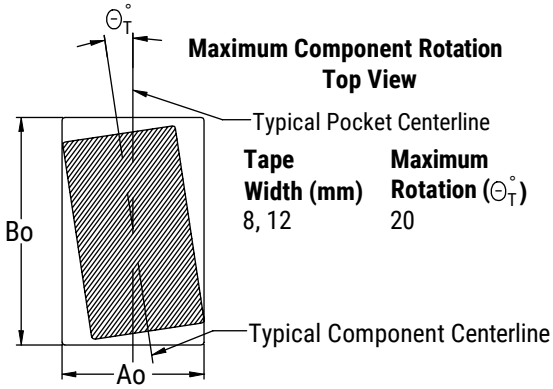

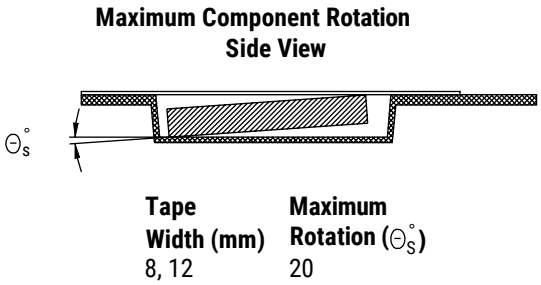

Figure 3 – Maximum Lateral Movement

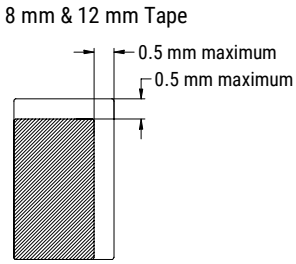

Figure 4 – Bending Radius

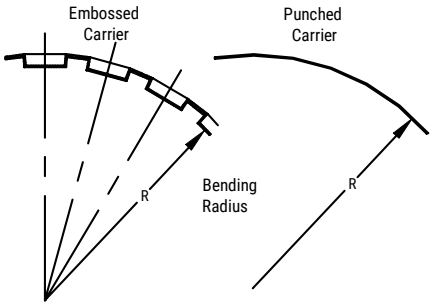

Downloaded from Arrow.com.

Figure 5 – Reel Dimensions

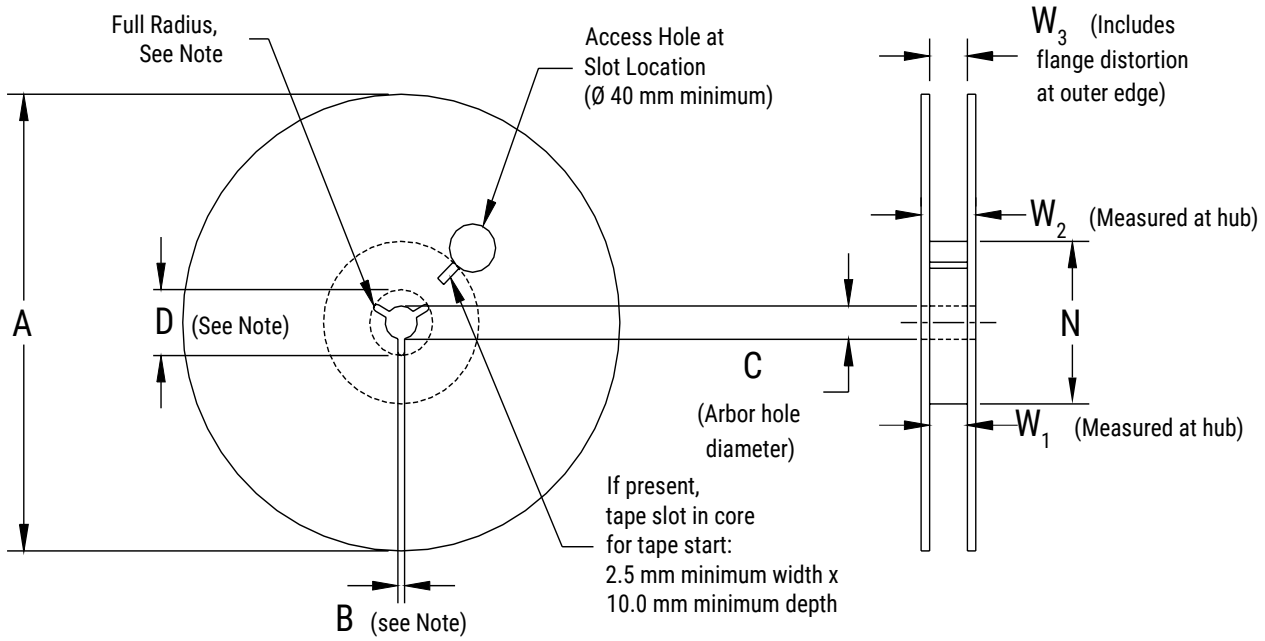

Note: Drive spokes optional; if used, dimensions B and D shall apply.

Table 5 – Reel Dimensions

Metric will govern

Constant Dimensions — Millimeters (Inches)				
Tape Size	A	B Minimum	C	D Minimum
8 mm	178 ±0.20 (7.008 ±0.008) or 330 ±0.20 (13.000 ±0.008)	1.5 (0.059)	13.0 +0.5/−0.2 (0.521 +0.02/−0.008)	20.2 (0.795)
12 mm				

Variable Dimensions — Millimeters (Inches)				
Tape Size	N Minimum	W_1	W_2 Maximum	W_3
8 mm	50 (1.969)	8.4 +1.5/−0.0 (0.331 +0.059/−0.0)	14.4 (0.567)	Shall accommodate tape width without interference
12 mm		12.4 +2.0/−0.0 (0.488 +0.078/−0.0)	18.4 (0.724)	

Downloaded from Arrow.com.

Figure 6 – Tape Leader & Trailer Dimensions

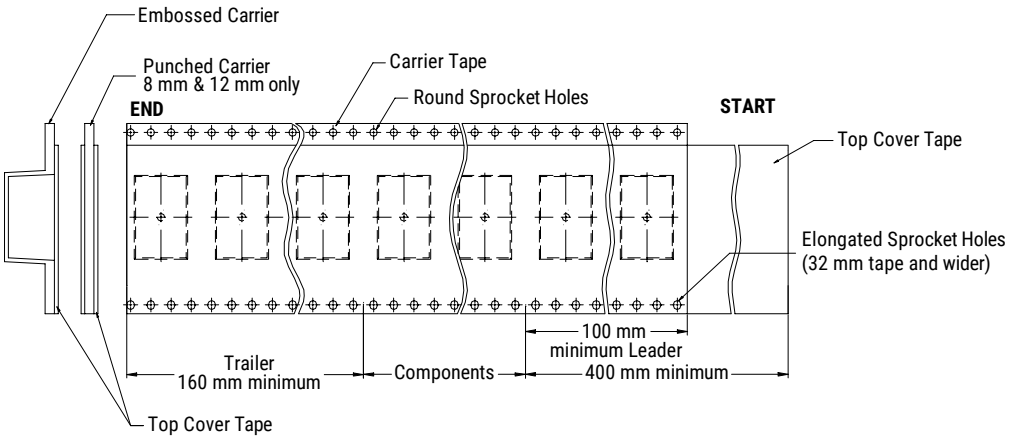

Figure 7 – Maximum Camber

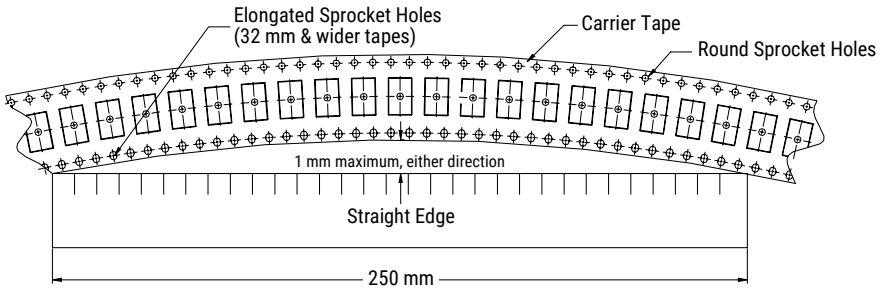

Downloaded from Arrow.com.

KEMET Electronics Corporation Sales Offices

For a complete list of our global sales offices, please visit https://www.yageogroup.com/SalesResources/SalesOffices

Disclaimer

All product specifications, statements, information and data (collectively, the "Information") in this datasheet are subject to change. The customer is responsible for checking and verifying the extent to which the Information contained in this publication is applicable to an order at the time the order is placed. All Information given herein is believed to be accurate and reliable, but it is presented without guarantee, warranty, or responsibility of any kind, expressed or implied.

Statements of suitability for certain applications are based on KEMET Electronics Corporation's ("KEMET") knowledge of typical operating conditions for such applications, but are not intended to constitute – and KEMET specifically disclaims – any warranty concerning suitability for a specific customer application or use. The Information is intended for use only by customers who have the requisite experience and capability to determine the correct products for their application. Any technical advice inferred from this Information or otherwise provided by KEMET with reference to the use of KEMET's products is given gratis, and KEMET assumes no obligation or liability for the advice given or results obtained.

Although KEMET designs and manufactures its products to the most stringent quality and safety standards, given the current state of the art, isolated component failures may still occur. Accordingly, customer applications which require a high degree of reliability or safety should employ suitable designs or other safeguards (such as installation of protective circuitry or redundancies) in order to ensure that the failure of an electrical component does not result in a risk of personal injury or property damage.

Although all product–related warnings, cautions and notes must be observed, the customer should not assume that all safety measures are indicated or that other measures may not be required.

KEMET is a registered trademark of KEMET Electronics Corporation.

Downloaded from Arrow.com.