HC-STA-B24-HLFS-1STM32-EL-AL - Housing

1412784

https://www.phoenixcontact.com/ae/products/1412784

Please be informed that the data shown in this PDF document is generated from our online catalog. Please find the complete data in the user documentation. Our general terms of use for downloads are valid.



Sleeve housing B24, for single locking latch, material: Die-cast aluminum, salt water resistant, cable outlets: 1, lateral, 1x M32, height: 60 mm, cable gland: none, Standard

Your advantages

- Good shielding in the event of electromagnetic interference

Commercial data

Item number	1412784
Packing unit	1 pc
Minimum order quantity	1 pc
Sales key	AF7
Product key	AF7APB
GTIN	4055626060507
Weight per piece (including packing)	238.7 g
Weight per piece (excluding packing)	238.7 g
Customs tariff number	85389099
Country of origin	PL

Downloaded from Arrow.com.

Technical data

Notes

General	for contact inserts HC-B24, BB46, D64, DD108, HV10/16, M
General	also available as a powder-coated or color version: 1373261 HC-STA-B24-HLFS-1STM32-EL/...

Product properties

Product type	Housing with locking latch
Housing type	Sleeve housing
Application	Standard
Type	B24
No. of cable outlets	1
Type of the screw connection	1x M32
Cable outlet	lateral
Pg screw connection	none

Dimensions

Dimensional drawing	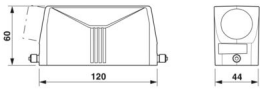
Width	44 mm
Height	60 mm
Length	120 mm

Material specifications

Housing material	Die-cast aluminum, salt water resistant
Housing surface material	uncoated

Mechanical properties

Mechanical data

Type of the screw connection	1x M32
Locking type	Pin

Environmental and real-life conditions

Ambient conditions

Degree of protection	IP66
	IP67
Enclosure rating (NEMA)	4 (UL 50e)
	4X (UL 50e)
	12 (UL 50e)

Downloaded from Arrow.com.

Impact strength	IK08
Ambient temperature (operation)	-40 °C ... 125 °C

Downloaded from Arrow.com.

Drawings

Dimensional drawing

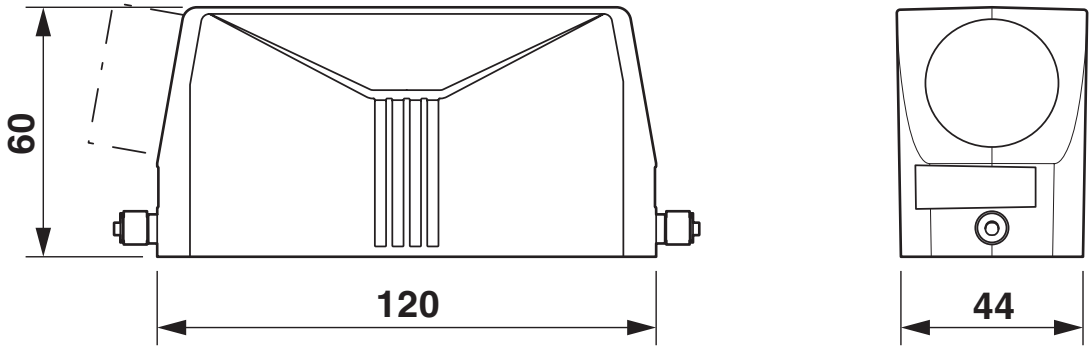

Dimensional drawing

Downloaded from Arrow.com.

Approvals

To download certificates, visit the product detail page: https://www.phoenixcontact.com/ae/products/1412784

DNV
Approval ID: TAE000037S

cUL Recognized
Approval ID: E255026

UL Recognized
Approval ID: E255026

EAC
Approval ID: RU C-DE.AI30.B.01102

Downloaded from Arrow.com.

Classifications

ECLASS

ECLASS-13.0	27440202
ECLASS-15.0	27440202

ETIM

ETIM 9.0	EC000437

UNSPSC

UNSPSC 21.0	31261500

Downloaded from Arrow.com.

Environmental product compliance

EU RoHS

Fulfills EU RoHS substance requirements	Yes, No exemptions

China RoHS

Environment friendly use period (EFUP)	EFUP-E
	No hazardous substances above the limits

EU REACH SVHC

REACH candidate substance (CAS No.)	No substance above 0.1 wt%

EF3.0 Climate Change

CO2e kg	4.617 kg CO2e

Phoenix Contact 2025 © - all rights reserved
https://www.phoenixcontact.com

PHOENIX CONTACT Middle East FZ LLC
1201N-1206N, Dubai Science Park Towers – North
P.O. Box 345002, Dubai, United Arab Emirates
(+971) 4 437-0324
info-me@phoenixcontact.com

Downloaded from Arrow.com.