THIS DRAWING IS UNPUBLISHED. RELEASED FOR PUBLICATION 2017
© COPYRIGHT 2017 BY -TE CONNECTIVITY ALL RIGHTS RESERVED.

REVISIONS

P	LTR	DESCRIPTION	DATE	DWN	APVD
	B	REVISED PER PCN E-17-016543	26OCT2017	SS	DM

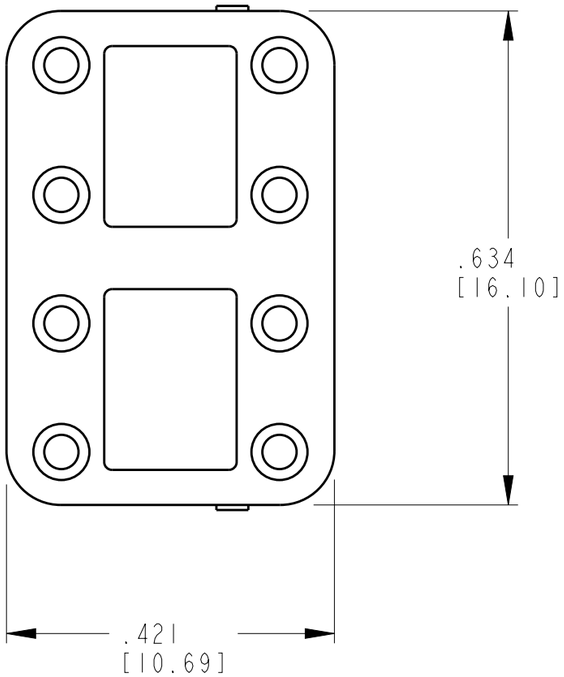

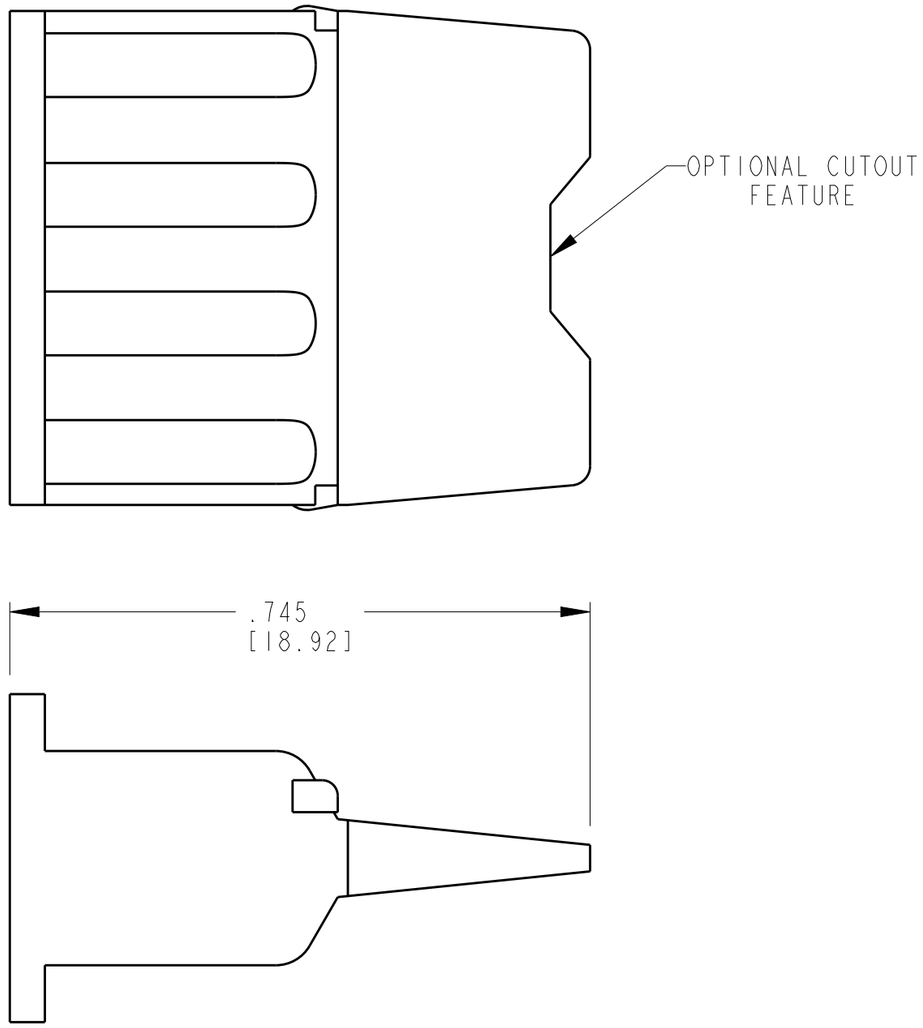

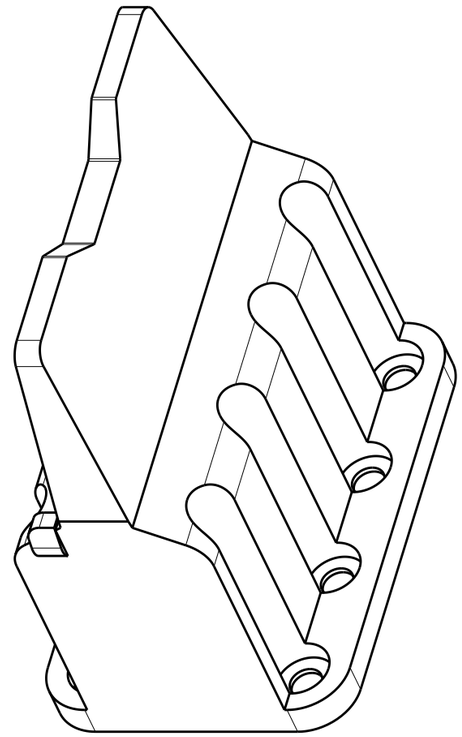

TE INTERNAL PN	DEUTSCH PN
WM-8S	WM-8S

1. THIS WEDGE LOCK MATES WITH DTM06-08SX-XXXX PLUG. (X = A,B,C,D KEYS; XXXX = ALL MODIFICATIONS). CONSULT FACTORY FOR MODS.

NOTES: UNLESS OTHERWISE SPECIFIED

THIS DRAWING IS A CONTROLLED DOCUMENT.

DIMENSIONS: INCHES [mm]

TOLERANCES UNLESS OTHERWISE SPECIFIED:
0 PLC ±-
1 PLC ±-
2 PLC ±-
3 PLC ±.025 [0.63]
4 PLC ±-
ANGLES ±0°30'0"

MATERIAL: PBT GF ORANGE
FINISH: - -

DWN J.APOSTOL 25APR2007
CHK B.BYFORD 01MAY2007
APVD R.REED 02MAY2007
PRODUCT SPEC 108-151010
APPLICATION SPEC -
WEIGHT 1.25 GR

TE Connectivity

NAME: WEDGE LOCK FOR 8 CONT. PLUG HOUSING DTM SERIES
-

SIZE	CAGE CODE	DRAWING NO	RESTRICTED TO
A3	4AFU8	C-WM-8S	-

CUSTOMER DRAWING | SCALE 5:1 | SHEET 1 OF 1 | REV B

1470-19 (3/13)

Downloaded from Arrow.com.