Overview

KEMET's Goldmax conformally coated radial through-hole ceramic capacitors in X8L dielectric feature a +150°C maximum operating temperature and is considered "general purpose high temperature". These components are fixed, ceramic dielectric capacitors that are suited for high temperature bypass and decoupling applications or frequency discriminating circuits, where Q and stability of capacitance characteristics are not critical. X8L exhibits a predictable change in capacitance with respect to time and voltage, and boasts a minimal change in capacitance with reference to ambient temperature up to +125°C. Beyond +125°C X8L displays a wider variation in capacitance. Capacitance change is limited to ±15% from −55°C to +125°C and +15, −40% from +125°C to +150°C.

Driven by the demand for a more robust and reliable component, X8L dielectric capacitors were developed for critical applications where reliability at higher operating temperatures are a concern. These capacitors are widely used in automotive circuits as well as general high temperature applications.

In addition to commercial grade, automotive grade devices are available and meet the demanding Automotive Electronics Council's AEC−Q200 qualification requirements.

These devices meet the flame test requirements outlined in UL Standard 94V−0.

Benefits

- Radial through-hole form factor
- Conformally coated
- Operating temperature range of -55°C to +150°C
- Lead (Pb)-Free, RoHS and REACH compliant
- DC voltage ratings of 25 and 50 V
- Capacitance offerings ranging from 0.15 µF up to 4.7 µF
- Available capacitance tolerances of ±5%, ±10% & ±20%
- Commercial and Automotive (AEC−Q200) grades available
- Non-polar device, minimizing installation concerns
- 100% pure matte tin-plated lead finish allowing for excellent solderability
- SnPb-plated lead finish option available upon request (60/40)
- Encapsulation meets flammability standard UL 94V−0

Downloaded from Arrow.com.

Ordering Information

C	320		C	475	K	3	N	5	T	A	7301
Ceramic	Style/Size		Specification/ Series	Capacitance Code (pF)	Capacitance Tolerance[1]	Rated Voltage (VDC)	Dielectric	Design	Lead Finish[2]	Failure Rate	Packaging (C-Spec)
	315 316 317 318 320 321 322	323 324 325 326 327 328	C = Standard	First two digits represent significant figures. Third digit specifies number of zeros.	J = ±5% K = ±10% M = ±20%	3 = 25 5 = 50	N = X8L	5 = Multilayer	T = 100% Matte Sn H = SnPb (60/40)*	A = N/A	See "Packaging C-Spec Ordering Options Table" below

[1] Additional capacitance Tolerance offerings may be available. Contact KEMET for details.

[2] Lead wire materials:

Standard: 100% matte tin (Sn) with nickel (Ni) underplate and steel core ("T" designation).

Alternative 1: 60% tin (Sn)/40% lead (Pb) finish with copper-clad steel core ("H" designation). KEMET does not recommend the usage of this termination for Automotive applications.

Additional lead finish options may be available. Contact KEMET for details.

** Only available as Commercial Grade.*

Applications

Typical applications include use in extreme environments, such as down-hole oil exploration, under-hood automotive, military and aerospace.

Application Notes

These devices are not recommended for use in overmold applications and/or processes.

Packaging C-Spec Ordering Options Table

Packaging Type[1]	Packaging/Grade Ordering Code (C-Spec)
Commercial Grade	
Bulk Bag	Not required (Blank)
12" Tape & Reel (16.0±0.5 mm lead length)	7301
12" Tape & Reel (18.0 mm minimum lead length)	7303
Ammo Pack (16.0±0.5 mm lead length)	7305
Ammo Pack (18.0 mm minimum lead length)	7317
Automotive Grade	
Bulk Bag Automotive Grade	9170
12" Tape & Reel (16.0±0.5 mm lead length)	9170 7301
12" Tape & Reel (18.0 mm minimum lead length)	9170 7303
Ammo Pack (16.0±0.5 mm lead length)	9170 7305
Ammo Pack (18.0 mm minimum lead length)	9170 7317

[1] Bulk bag option is required for Size/Style C321 and C331.

Downloaded from Arrow.com.

Dimensions – Inches (Millimeters)

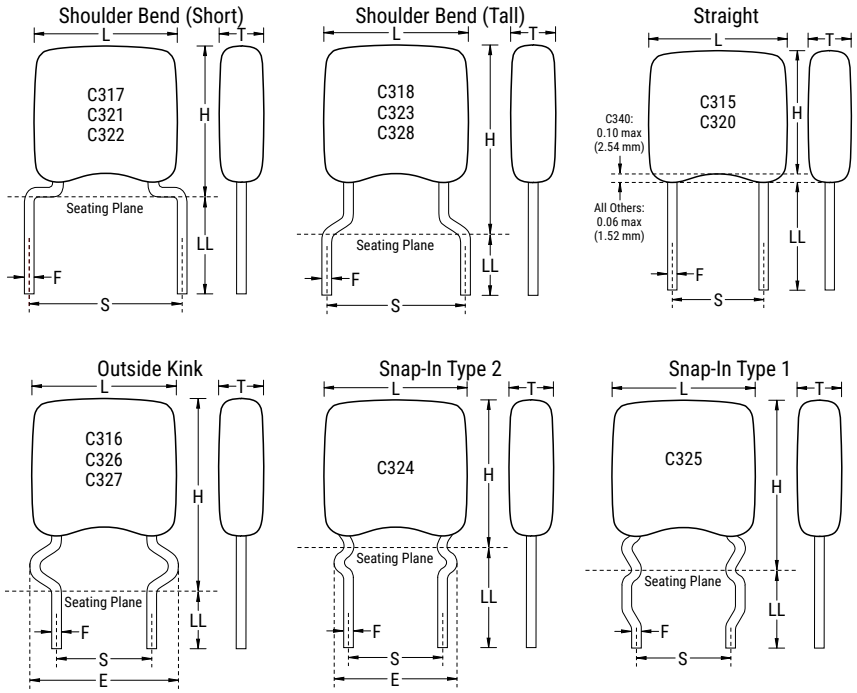

** May be supplied in a "Shoulder Bend" or "Straight" Lead configuration. Please see Capacitance Range Waterfall section of this document to determine lead configuration availability by capacitance value.*

Series	Style / Size	S Lead Spacing ± 0.030 (0.78)	L Length Maximum	H Height Maximum	T Thickness Maximum	F Lead Diameter +0.004 (0.10), -0.001 (0.025)	LL Lead Length Minimum
C31X	315	0.100 (2.54)	0.150 (3.81)	0.120 (3.14)	0.100 (2.54)	0.020 (0.51)	0.276 (7.00)
	316		0.150 (3.81)	0.230 (5.08)	0.100 (2.54)		0.200 (5.08)
C32X	324		0.200 (5.08)	0.230 (5.84)	0.125 (3.18)[1]		0.276 (7.00)
	320		0.200 (5.08)	0.230 (5.84)	0.125 (3.18)[1]		0.276 (7.00)
	326		0.200 (5.08)	0.300 (7.62)	0.125 (3.18)[1]		0.200 (5.08)
C31X	317	0.200 (5.08)	0.150 (3.81)	0.200 (5.08)	0.100 (2.54)		0.276 (7.00)
	318		0.150 (3.81)	0.235 (5.97)	0.100 (2.54)		0.276 (7.00)
C32X	321	0.250 (6.35)	0.200 (5.08)	0.260 (6.60)	0.125 (3.18)[1]		0.276 (7.00)
	322	0.200 (5.08)	0.200 (5.08)	0.260 (6.60)	0.125 (3.18)[1]		0.276 (7.00)
	323		0.200 (5.08)	0.300 (7.62)	0.125 (3.18)[1]		0.276 (7.00)
	325		0.200 (5.08)	0.300 (7.62)	0.125 (3.18)[1]		0.276 (7.00)
	328		0.200 (5.08)	0.300 (7.62)	0.125 (3.18)[1]		0.276 (7.00)
	327		0.200 (5.08)	0.320 (8.13)	0.125 (3.18)[1]		0.200 (5.08)

[1] Thickness maximum (T) = 0.160" (4.07 mm) for capacitance values greater than or equal to 4.7 µF

Downloaded from Arrow.com.

Automotive C-Spec Information

KEMET Automotive Grade products meet or exceed the requirements outlined by the Automotive Electronics Council. The details regarding test methods and conditions are referenced in the document AEC–Q200, Stress Test Qualification for Passive Components. These products are supported by a Product Change Notification (PCN) and Production Part Approval Process warrant (PPAP).

Automotive products offered through our distribution channel have been assigned an inclusive ordering code C-Spec, "9170." This C-Spec was developed in order to better serve small and medium-sized companies that prefer an automotive grade component, without the requirement to submit a customer Source Controlled Drawing (SCD) or specification for review by a KEMET engineering specialist. This C-Spec is therefore not intended for use by KEMET's OEM Automotive customers and are not granted the same "privileges" as other automotive C-Specs. Customer PCN approval and PPAP request levels are limited (see details below).

Product Change Notification (PCN)
The KEMET Product Change Notification system is used to communicate primarily the following types of changes:
- Product/process changes that affect product form, fit, function, and/or reliability
- Changes in manufacturing site
- Product obsolescence

KEMET Automotive C-Spec	Customer Notification due to:		Days prior to implementation
	Process/Product change	Obsolescence*	
KEMET assigned[1]	Yes (with approval and sign off)	Yes	180 days Minimum
9170	Yes (without approval)	Yes	90 days Minimum

[1] KEMET assigned C-Specs require the submittal of a customer SCD or customer specification for review. For additional information contact KEMET.

Production Part Approval Process (PPAP)
The purpose of the Production Part Approval Process is:
- To ensure that supplier can meet the manufacturability and quality requirements for the purchased parts.
- To provide the evidence that all customer engineering design record and specification requirements are properly understood and fulfilled by the manufacturing organization.
- To demonstrate that the established manufacturing process has the potential to produce the part

KEMET Automotive C-Spec	PPAP Level				
	1	2	3	4	5
KEMET assigned[1]	●	●	●	●	●
9170			○		

[1] KEMET assigned C-Specs require the submittal of a customer SCD or customer specification for review. For additional information contact KEMET.

● Part number specific PPAP available with customer information included.
○ Product family PPAP only

Downloaded from Arrow.com.

Qualification/Certification

Commercial Grade products are subject to internal qualification. Details regarding test methods and conditions are referenced in Table 2, Performance & Reliability.

Automotive Grade products meet or exceed the requirements outlined by the Automotive Electronics Council. Details regarding test methods and conditions are referenced in document AEC–Q200, Stress Test Qualification for Passive Components. For additional information regarding the Automotive Electronics Council and AEC–Q200, please visit their website at www.aecouncil.com.

Environmental Compliance

Lead (Pb)-free, REACH and RoHS compliant without exemptions when ordered with a 100% tin (Sn) wire lead finish. Product ordered with tin/ lead (Sn60/Pb40) wire lead finish do not meet RoHS criteria.

Series	Termination Finish (Wire Lead)	RoHS Compliant	RoHS Exemption Code	REACH Compliant[1]	Halogen Free
300 (C3XX)	100% Matte Sn	Yes	n/a	Yes	Yes
	Sn60/Pb40	No	n/a	Yes	Yes

[1] *REACH compliance indicates product does not contain Substance/s of Very High Concern (SVHC*

Downloaded from Arrow.com.

Electrical Parameters/Characteristics

Item	Parameters/Characteristics
Operating Temperature Range:	−55°C to +150°C
Capacitance Change with Reference to +25°C and 0 VDC Applied (TCC):	±15%(-55ºC to 125ºC) ; +15%, -40% (125ºC to 150ºC)
Aging Rate (Maximum % Cap Loss/Decade Hour):	3.0%
Dielectric Withstanding Voltage:	250% of rated voltage (5±1 seconds and charge/discharge not exceeding 50 mA at +25°C)
Dissipation Factor (DF) Maximum Limit at +25ºC:	2.5%
Insulation Resistance (IR) Limit at +25°C:	1,000 megohm microfarads or 100 GΩ (Rated voltage applied for 120±5 seconds at +25°C)

To obtain IR limit, divide MΩ-μF value by the capacitance and compare to GΩ limit. Select the lower of the two limits.
Capacitance and dissipation factor (DF) measured under the following conditions:

1kHz ± 50Hz and 1.0 ± 0.2 Vrms if capacitance ≤10μF

120Hz ± 10Hz and 0.5 ± 0.1 Vrms if capacitance >10μF

Note: When measuring capacitance it is important to ensure the set voltage level is held constant. The HP4284 and Agilent E4980 have a feature known as Automatic Level Control (ALC). The ALC feature should be switched to "ON."

Post Environmental Limits

High Temperature Life, Biased Humidity and Storage Life					
Dielectric	Rated DC Voltage	Capacitance Value	DF (%)	Capacitance Shift	IR
X8L	25	All	3.0	±20%	10% of initial limit
	50		3.0		

Downloaded from Arrow.com.

Table 1A - C31X Style/Size (0.100" & 0.200" Lead Spacing), Capacitance Range Waterfall

C315, C316, C317, C318 Style/Size (0.100" & 0.200" Lead Spacing)			
Rated Voltage (VDC)		25	50
Voltage Code		3	5
Capacitance	Capacitance Tolerance	Capacitance Code (Available Capacitance)	
0.15µF	J = ±5% K = ±10% M = ±20%	154	154
0.18µF		184	184
0.22µF		224	224
0.27µF		274	
0.33µF		334	
0.39µF		394	
0.47µF		474	
0.56µF		564	
0.68µF		684	
Rated Voltage (VDC)		25	50
Voltage Code		3	5

Table 1B - C32X Style/Size (0.100" & 0.200" Lead Spacing), Capacitance Range Waterfall

C320, C322, C323, C326, C328 Style/Size (0.100" & 0.200" Lead Spacing)			
Rated Voltage (VDC)		25	50
Voltage Code		3	5
Capacitance	Capacitance Tolerance	Capacitance Code (Available Capacitance)	
0.15µF	J = ±5% K = ±10% M = ±20%	154	154
0.18µF		184	184
0.22µF		224	224
0.27µF		274	
0.33µF		334	
0.39µF		394	394
0.47µF		474	474
0.56µF		564	564
0.68µF		684	684
0.82µF		824	824
1.0µF		105	105
1.2µF		125	125
1.5µF		155	155
1.8µF		185	185
2.2µF		225	225
2.7µF		275	
3.3µF		335	
3.9µF		395	
4.7µF		475	
Rated Voltage (VDC)		25	50
Voltage Code		3	5

Downloaded from Arrow.com.

Table 1C - C32X Style/Size (0.100" & 0.200" Lead Spacing), Capacitance Range Waterfall

C321, C324, C325, C327 Style/Size (0.100" & 0.200" Lead Spacing)			
Rated Voltage (VDC)		25	50
Voltage Code		3	5
Capacitance	Capacitance Tolerance	Capacitance Code (Available Capacitance)	
0.39µF	J = ±5% K = ±10% M = ±20%	394	394
0.47µF		474	474
0.56µF		564	564
0.68µF		684	684
0.82µF		824	824
1.0µF		105	105
1.2µF		125	
1.5µF		155	
1.8µF		185	
2.2µF		225	
2.7µF		275	
3.3µF		335	
3.9µF		395	
4.7µF		475	
Rated Voltage (VDC)		25	50
Voltage Code		3	5

Downloaded from Arrow.com.

Soldering Process

Recommended Soldering Methods:

- Solder Wave
- Hand Soldering (Manual)

Recommended Soldering Profile:

- Optimum Wave Solder Profile

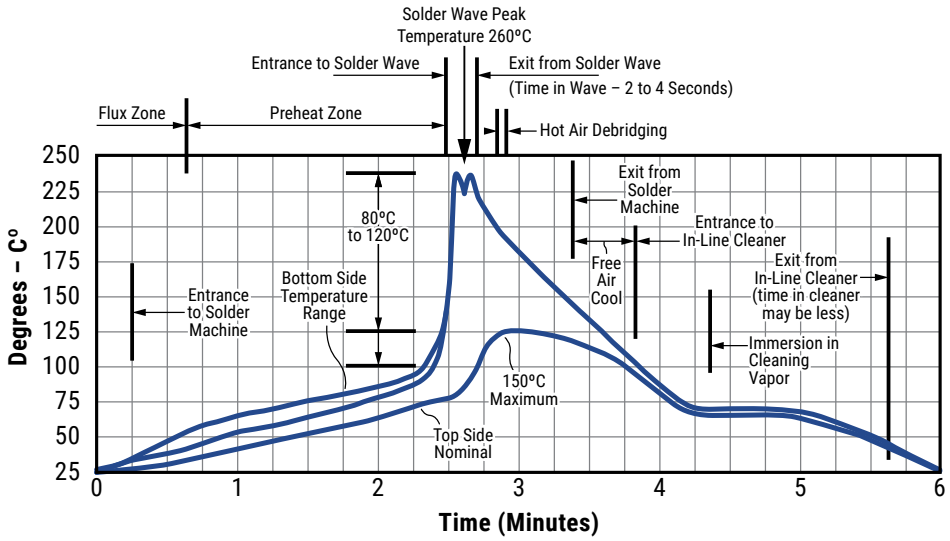

Mounting

All encased capacitors will pass the Resistance to Soldering Heat of MIL-STD-202, Method 210, Condition B. This test simulates wave solder topside board mount product. This demonstration of resistance to solder heat is in accordance with what is believed to be the industry standard. More severe treatment must be considered reflective of an improper soldering process.

The above figure is a recommended solder wave profile for both axial and radial leaded ceramic capacitors.

- Hand Soldering (Manual)

with Pre-heating

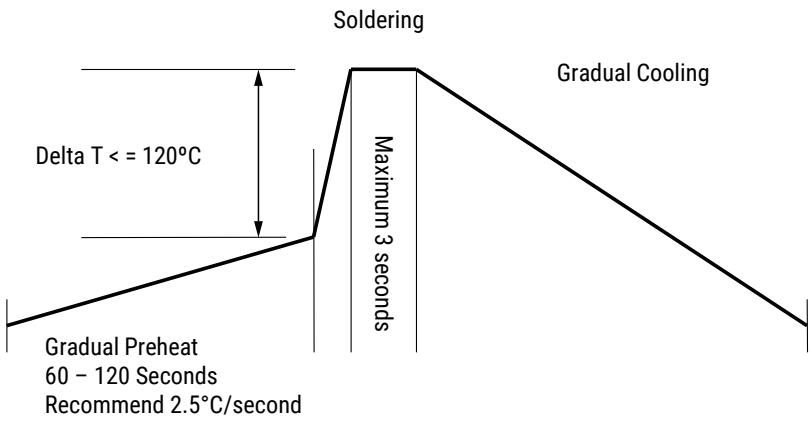

Downloaded from Arrow.com.

Table 2 – Performance & Reliability: Test Methods and Conditions

Stress	Reference	Test or Inspection Method
Solderability	J–STD–002	Magnification 50X. Conditions: a) Method A, at 235°C, Category 3
Temperature Cycling	JESD22 Method JA–104	5 cycles (–55°C to +125°C), measurement at 24 hours +/–4 hours after test conclusion.
Biased Humidity	MIL–STD–202 Method 103	Load humidity, 1,000 hours 85°C/85%RH and rated voltage. Add 100 K ohm resistor. Measurement at 24 hours +/–4 hours after test conclusion.
		Low volt humidity, 1,000 hours 85C°/85%RH and 1.5 V. Add 100 K ohm resistor. Measurement at 24 hours +/–4 hours after test conclusion.
Moisture Resistance	MIL–STD–202 Method 106	t = 24 hours/cycle. Steps 7a & 7b not required. Unpowered. Measurement at 24 hours +/–4 hours after test conclusion.
Thermal Shock	MIL–STD–202 Method 107	–55ºC to +125°C. Note: Number of cycles required – 300. Maximum transfer time – 20 seconds. Dwell time – 15 minutes. Air – Air.
High Temperature Life	MIL–STD–202 Method 108/EIA–198	1,000 hours at 125°C (85°C for Z5U) with 1 X rated voltage applied.
Storage Life	MIL–STD–202 Method 108	125°C, 0 VDC for 1,000 hours.
Vibration	MIL–STD–202 Method 204	5 g for 20 minutes, 12 cycles each of 3 orientations. Note: Use 8"X5" PCB .031" thick 7 secure points on one long side and 2 secure points at corners of opposite sides. Parts mounted within 2" from any secure point. Test from 10–2000 Hz.
Resistance to Soldering Heat	MIL–STD–202 Method 210	Condition B. No preheat of samples. Note: single wave solder – procedure 2.
Terminal Strength	MIL–STD–202 Method 211	Conditions A (454g), Condition C (227g)
Mechanical Shock	MIL–STD–202 Method 213	Figure 1 of Method 213, Condition C.
Resistance to Solvents	MIL–STD–202 Method 215	Add aqueous wash chemical – OKEM Clean or equivalent.

Storage & Handling

The un-mounted storage life of a leaded ceramic capacitor is dependent upon storage and atmospheric conditions as well as packaging materials. While the ceramic chips enveloped under the epoxy coating themselves are quite robust in most environments, solderability of the wire lead on the final epoxy-coated product will be degraded by exposure to high temperatures, high humidity, corrosive atmospheres, and long term storage. In addition, packaging materials will be degraded by high temperature and exposure to direct sunlight – reels may soften or warp, and tape peel force may increase.

KEMET recommends storing the un-mounted capacitors in their original packaging, in a location away from direct sunlight, and where the temperature and relative humidity do not exceed 40 degrees centigrade and 70% respectively. For optimum solderability, capacitor stock should be used promptly, preferably within 18 months of receipt. For applications requiring pre-tinning of components, storage life may be extended if solderability is verified. Before cleaning, bonding or molding these devices, it is important to verify that your process does not affect product quality and performance. KEMET recommends testing and evaluating the performance of a cleaned, bonded or molded product prior to implementing and/or qualifying any of these processes.

Downloaded from Arrow.com.

Construction

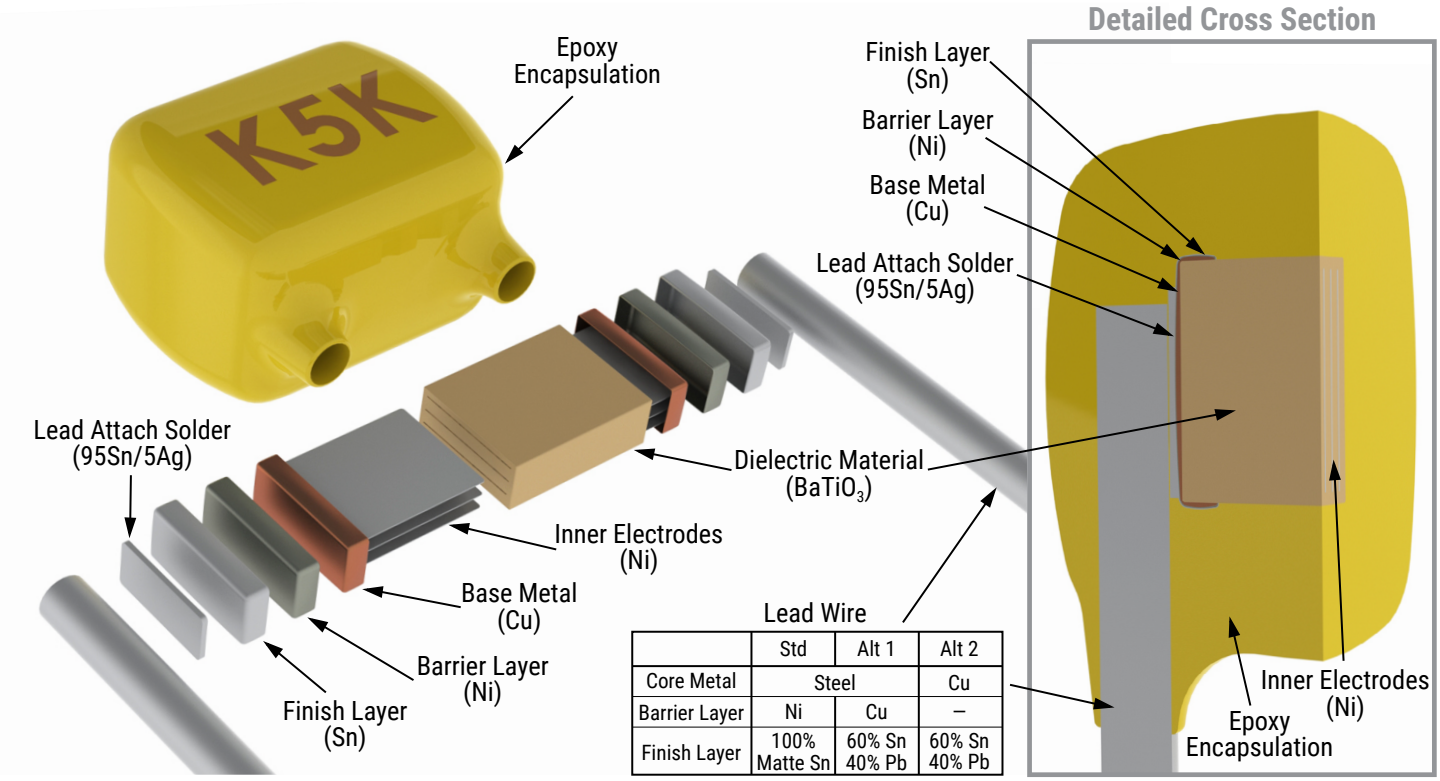

	Std	Alt 1	Alt 2
Core Metal	Steel		Cu
Barrier Layer	Ni	Cu	–
Finish Layer	100% Matte Sn	60% Sn 40% Pb	60% Sn 40% Pb

Marking

STYLE/SIZE C31X, C32X

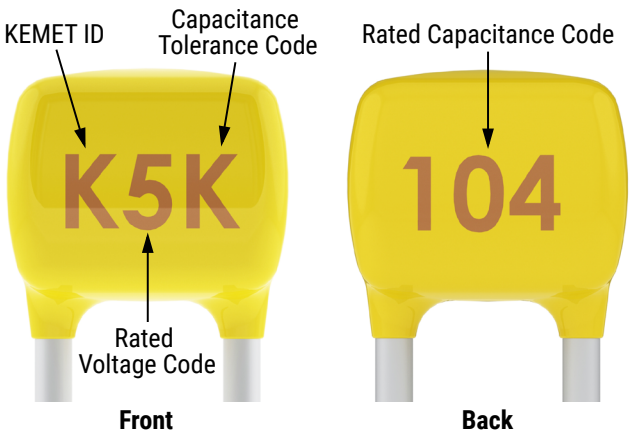

[1] To properly request the inclusion of the date code in the marking ordering code please contact your KEMET representative.

Downloaded from Arrow.com.

Packaging Quantities

<table>
<tr><th>Style/ Size</th><th>Standard Bulk Quantity</th><th>Ammo Pack Quantity Maximum</th><th>Reel Quantity Maximum (12" Reel)</th></tr>
<tr><td>315</td><td rowspan="13">500/Bag</td><td rowspan="5">2,500</td><td rowspan="5">2,500</td></tr>
<tr><td>316</td></tr>
<tr><td>317</td></tr>
<tr><td>318</td></tr>
<tr><td>320</td></tr>
<tr><td>321</td><td>N/A</td><td>N/A</td></tr>
<tr><td>322</td><td rowspan="7">2,500</td><td rowspan="7">2,500</td></tr>
<tr><td>323</td></tr>
<tr><td>324</td></tr>
<tr><td>325</td></tr>
<tr><td>326</td></tr>
<tr><td>327</td></tr>
<tr><td>328</td></tr>
</table>

Downloaded from Arrow.com.

Tape & Reel Packaging Information

KEMET offers standard reeling of Molded and Conformally Coated Radial Leaded Capacitors in accordance with EIA standard 468. Parts are taped to a tagboard carrier strip, and wound on a reel as shown in Figure 1. Kraft paper interleaving is inserted between the layers of capacitors on the reel. Ammopack is also available, with the same lead tape configuration and package quantities.

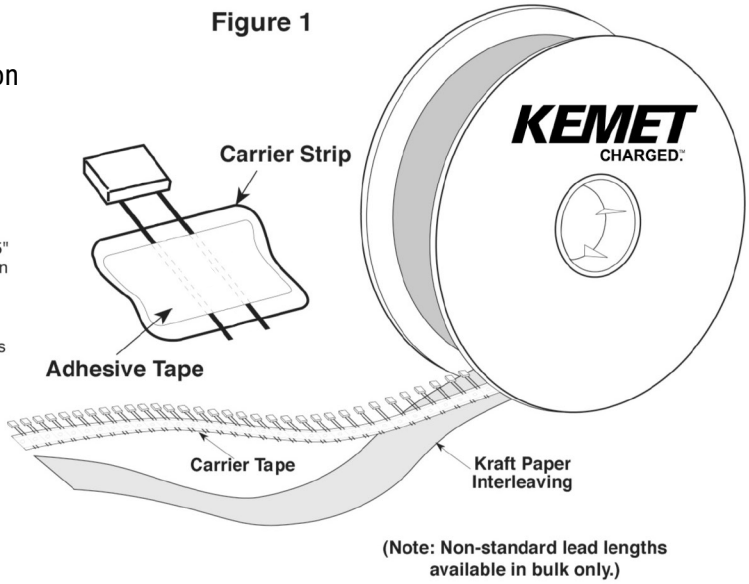

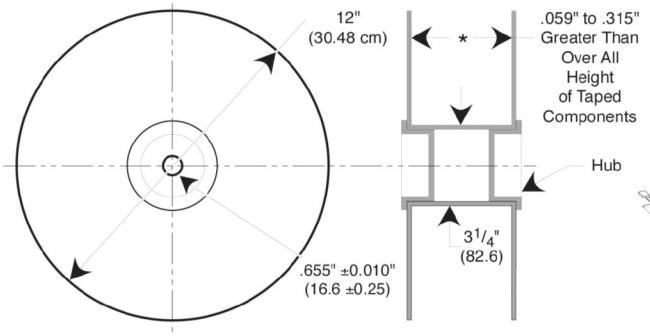

Figure 3: Standard Reel

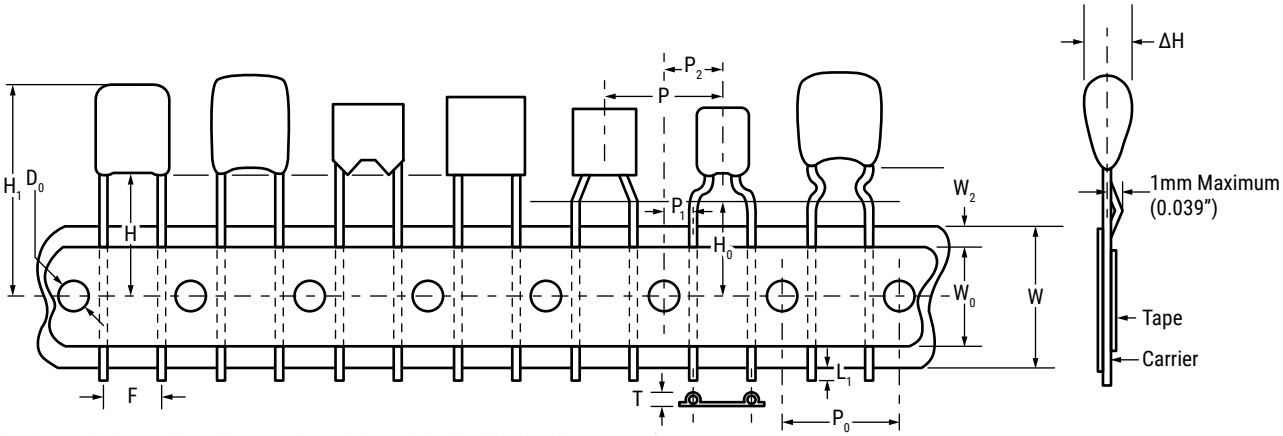

Figure 2: Lead Tape Configuration (See Table Below)

Ceramic Radial Tape and Reel Dimensions

Metric will govern

Constant Dimensions — Millimeters (Inches)								
D_0 ±0.2 (0.008)	P_0 ±0.3 (0.012)	ΔH ±0.2 (0.008)	L_1 Maximum	t ±0.2 (0.008)	T Maximum	W +1.0/−0.5 (+0.039/−0.020)	W_0 Minimum	W_2 Maximum
4.00 (0.157)	12.7 (0.500)	4.0 (0.157)	1.0 (0.039)	0.7 (0.051)	1.5 (0.059)	18.0 (0.709)	5.0 (0.197)	3.0 (0.118)

Downloaded from Arrow.com.

Ceramic Radial Tape and Reel Dimensions cont.

Metric will govern

Variable Dimensions — Millimeters (Inches)							
F ±0.78 (0.030)[1]	P_1 ±0.30 (0.012)[1]	P ±0.3 (0.012)	P_2 ±1.3 (0.051)	H		H_0	
				Straight Lead Configuration		Formed Lead Configuration[2]	
				Packaging C-Spec[3]			
				7301/7305	7303/7317	7301/7305	7303/7317
2.54 (0.100)	5.08 (0.200)	12.7 (0.500)	6.35 (0.250)	16.0±0.5 (0.630±0.020)	18.0 (0.709) Minimum	16.0±0.5 (0.630±0.020)	18.0 (0.709) Minimum
4.32 (0.170)	3.89 (0.153)	12.7 (0.500)	6.35 (0.250)				
5.08 (0.200)	3.81 (0.150)	12.7 (0.500)	6.35 (0.250)				
5.59 (0.220)	3.25 (0.128)	12.7 (0.500)	6.35 (0.250)				
6.98 (0.275)	2.54 (0.100)	12.7 (0.500)	6.35 (0.250)				
7.62 (0.300)	2.24 (0.088)	12.7 (0.500)	6.35 (0.250)				
9.52 (0.375)	7.62 (0.300)	12.7 (0.500)	6.35 (0.250)				
10.16 (0.400)	7.34 (0.290)	25.4 (1.000)	N/A				
12.06 (0.475)	6.35 (0.250)	25.4 (1.000)	N/A				
14.60 (0.575)	5.08 (0.200)	25.4 (1.000)	N/A				
17.14 (0.675)	3.81 (0.15)	25.4 (1.000)	N/A				

[1] Measured at the egress from the carrier tape, on the component side.

[2] Formed lead configuration includes: "shoulder bend", "inside kink", "outside kink", and "snap-in". For more information regarding available lead configurations see "Dimensions" section of this document.

[3] The "Packaging C-Spec" is a 4 digit code which identifies the packaging type, lead length and/or lead material. When ordering, the proper code must be included in the 15th through 18th character positions of the ordering code. See "Ordering Information" section of this document for further details.

Symbol Reference Table	
D_0	Sprocket Hole Diameter
P_0	Sprocket Hole Pitch
P	Component Pitch
F	Lead Spacing
P_1	Sprocket Hole Center to Lead Center
P_2	Sprocket Hole Center To Component Center
H	Height to Seating Plane (Straight Leads Only)
H_0	Height to Seating Plane (Formed Leads Only)
H_1	Component Height Above Tape Center
ΔH	Component Alignment
L_1	Lead Protrusion
t	Composite Tape Thickness
W	Carrier Tape Width
W_0	Hold-Down Tape Width
W_2	Hold-Down Tape Location

Downloaded from Arrow.com.

KEMET Electronics Corporation Sales Offices

For a complete list of our global sales offices, please visit https://www.yageogroup.com/SalesResources/SalesOffices

Disclaimer

YAGEO Corporation and its affiliates do not recommend the use of commercial or automotive grade products for high reliability applications or manned space flight.

All product specifications, statements, information and data (collectively, the "Information") in this datasheet are subject to change. The customer is responsible for checking and verifying the extent to which the Information contained in this publication is applicable to an order at the time the order is placed. All Information given herein is believed to be accurate and reliable, but it is presented without guarantee, warranty, or responsibility of any kind, expressed or implied.

Statements of suitability for certain applications are based on KEMET Electronics Corporation's ("KEMET") knowledge of typical operating conditions for such applications, but are not intended to constitute – and KEMET specifically disclaims – any warranty concerning suitability for a specific customer application or use. The Information is intended for use only by customers who have the requisite experience and capability to determine the correct products for their application. Any technical advice inferred from this Information or otherwise provided by KEMET with reference to the use of KEMET's products is given gratis, and KEMET assumes no obligation or liability for the advice given or results obtained.

Although KEMET designs and manufactures its products to the most stringent quality and safety standards, given the current state of the art, isolated component failures may still occur. Accordingly, customer applications which require a high degree of reliability or safety should employ suitable designs or other safeguards (such as installation of protective circuitry or redundancies) in order to ensure that the failure of an electrical component does not result in a risk of personal injury or property damage.

Although all product–related warnings, cautions and notes must be observed, the customer should not assume that all safety measures are indicated or that other measures may not be required.

KEMET is a registered trademark of KEMET Electronics Corporation.

Downloaded from Arrow.com.