LUMILEDS

ILLUMINATION

LUXEON CoB with FreshFocus Technology™

Accentuating freshness and overall visual appeal, making food irresistible

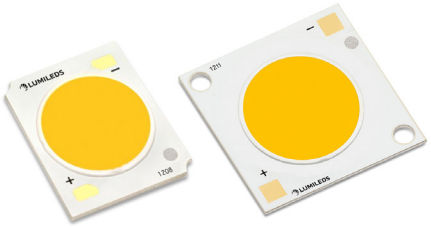

The LUXEON CoB with FreshFocus Technology creates the most impactful lighting ever available by accentuating the freshness and overall visual appeal of a variety of fresh food areas such as supermarkets, delis, butcher shops and bakeries.

LUXEON CoB with FreshFocus Technology brings out reds for greater visual appeal to meat; increases the appetite appeal of bread and pastries; exhibits the most natural and attractive fish and emphasizes the “just picked” appearance for produce (fruits and vegetables).

FEATURES AND BENEFITS
Spectrum engineered products with focused color points to enable the right lighting for specific merchandise and application
IR free and UV free, which keeps the merchandise fresher longer and prevents meat discoloration
Up to 4x lower thermal resistance than competitors enabling smaller heatsinks and higher lumens
Mouse bites for M2 and M3 make it easy to work with

PRIMARY APPLICATIONS
Downlights
Indoor Area Lighting
Lamps
Spotlights

 ©2021 Lumileds Holding B.V. All rights reserved.

Downloaded from Arrow.com.

Table of Contents

General Product Information **2**
Product Test Conditions 2
Part Number Nomenclature 2
Lumen Maintenance 2
Environmental Compliance 2
Performance Characteristics **3**
Product Selection Guide 3
Optical Characteristics 3
Electrical and Thermal Characteristics 4
Absolute Maximum Ratings **4**
Characteristic Curves **5**
Spectral Power Distribution Characteristics 5
Light Output Characteristics 5
Forward Current Characteristics 7
Radiation Pattern Characteristics 8
Color Bin Definitions **9**
Mechanical Dimensions **10**
Packaging and Labeling Information **11**
Tube Dimensions 11
Inner Box 13
Outer Box 14

Downloaded from Arrow.com.

General Product Information

Product Test Conditions

LUXEON CoB with FreshFocus Technology™ LEDs are tested and binned with a DC drive current specified below at a junction temperature, T_J, of 85°C.

900mA – LUXEON CoB 1208
1200mA – LUXEON CoB 1211

Part Number Nomenclature

Part numbers for LUXEON CoB with FreshFocus Technology follow the convention below:

L 2 C 5 – **A A** 0 0 **B B B B** E **C C D D**

Where:

A A – designates product type (BD=Bread & Pastries, PR=Produce, RM=Red Meat, MM=Marbled Meat, FS=Fish)

B B B B – designates product configuration (1208, 1211)

C C – designates light emitting surface (LES) size (15=15mm, 19=19mm)

D D – designates options for product specification

Therefore, the following part number is used for a LUXEON CoB 1208 for Red Meat with a 15mm LES:

L 2 C 5 – **R M** 0 0 **1 2 0 8** E **1 5** 0 0

Lumen Maintenance

Please contact your local Sales Representative or Lumileds Technical Solutions Manager for more information about the long-term performance of this product.

Environmental Compliance

Lumileds LLC is committed to providing environmentally friendly products to the solid-state lighting market. LUXEON CoB with FreshFocus Technology is compliant to the European Union directives on the restriction of hazardous substances in electronic equipment, namely the RoHS Directive 2011/65/EU and REACH Regulation (EC) 1907/2006. Lumileds LLC will not intentionally add the following restricted materials to its products: lead, mercury, cadmium, hexavalent chromium, polybrominated biphenyls (PBB) or polybrominated diphenyl ethers (PBDE).

Downloaded from Arrow.com.

Performance Characteristics

Product Selection Guide

Table 1. Product performance of LUXEON CoB with FreshFocus Technology at specified test current, T_j=85°C.

SPECTRUM	PRODUCT	LUMINOUS FLUX [1, 2] (lm)		TYPICAL LUMINOUS EFFICACY (lm/W)	TEST CURRENT (mA)	LES [3] (mm)	ENERGY EFFICIENCY CLASS [4]	PART NUMBER
		MINIMUM	TYPICAL					
Produce	LUXEON CoB 1208	3056	3396	108	900	15	F	L2C5-PR001208E1500
	LUXEON CoB 1211	4032	4480	107	1200	19	F	L2C5-PR001211E1900
Red Meat	LUXEON CoB 1208	2196	2440	78	900	15	Note 5	L2C5-RM001208E1500
	LUXEON CoB 1211	2920	3244	78	1200	19	Note 5	L2C5-RM001211E1900
Marbled Meat	LUXEON CoB 1208	2095	2328	74	900	15	Note 5	L2C5-MM001208E1500
	LUXEON CoB 1211	2803	3114	75	1200	19	Note 5	L2C5-MM001211E1900
Fish	LUXEON CoB 1208	3519	3910	125	900	15	E	L2C5-FS001208E1500
	LUXEON CoB 1211	4847	5386	129	1200	19	E	L2C5-FS001211E1900
Bread & Pastries	LUXEON CoB 1208	3337	3708	118	900	15	F	L2C5-BD001208E1500
	LUXEON CoB 1211	4481	4979	119	1200	19	E	L2C5-BD001211E1900

Notes for Table 1:
1. Lumileds maintains a tolerance of ±6.5% on luminous flux measurements.
2. Maximum luminous flux is 10% above typical luminous flux.
3. Light emitting surface (LES) is the inner diameter (phosphor area) inside the dam.
4. Energy efficiency class as specified in Commission Delegated Regulation (EU) 2019/2015. The available range of energy efficiency classes is A-G.
5. Exception: This product has chromaticity outside the scope of Commission Delegated Regulation (EU) 2019/2015; therefore, energy efficiency class is not defined.

Optical Characteristics

Table 2. Optical characteristics for LUXEON CoB with FreshFocus Technology at specified test current, T_j=85°C.

PART NUMBER	TYPICAL TOTAL INCLUDED ANGLE [1]	TYPICAL VIEWING ANGLE [2]
L2C5-xx0012xxExx00	135°	115°

Notes for Table 2:
1. Total angle at which 90% of total luminous flux is captured.
2. Viewing angle is the off axis angle from the LED centerline where the luminous intensity is ½ of the peak value.

Downloaded from Arrow.com.

Electrical and Thermal Characteristics

Table 3. Electrical and thermal characteristics for LUXEON CoB with FreshFocus Technology at specified test current, T_j=85°C.

PART NUMBER	FORWARD VOLTAGE [1] (V_f)			TYPICAL TEMPERATURE COEFFICIENT OF FORWARD VOLTAGE [2] (mV/°C)	TYPICAL THERMAL RESISTANCE—JUNCTION TO CASE [3] (°C/W)
	MINIMUM	TYPICAL	MAXIMUM		
L2C5-xx001208E1500	32.5	34.8	37.5	-16	0.29
L2C5-xx001211E1900	32.5	34.8	37.5	-16	0.23

Notes for Table 3:
1. Lumileds maintains a tolerance of ±2% on forward voltage measurements.
2. Measured between 25°C and 85°C for coefficient of forward voltage.
3. Thermal resistance is measured between junction and the bottom of the LUXEON CoB substrate.

Absolute Maximum Ratings

Table 4. Absolute maximum ratings for LUXEON CoB with FreshFocus Technology.

PARAMETER	MAXIMUM PERFORMANCE
DC Forward Current [1, 2]	2x test current
LED Junction Temperature [1, 3] (DC & Pulse)	125°C
ESD Sensitivity (ANSI/ESDA/JEDEC JS-001-2012)	Class 3B
Operating Case Temperature [1]	-40°C to 105°C
LED Storage Temperature	-40°C to 120°C
Allowable Reflow Cycles	3
Reverse Voltage ($V_{reverse}$)	LUXEON LEDs are not designed to be driven in reverse bias

Notes for Table 4:
1. Proper current derating must be observed to maintain the junction temperature below the maximum allowable junction temperature.
2. Residual periodic variations due to power conversion from alternating current (AC) to direct current (DC), also called "ripple," are acceptable if the following conditions are met:
   – The frequency of the ripple current is 100Hz or higher
   – The average current for each cycle does not exceed the maximum allowable DC forward current
   – The maximum amplitude of the ripple does not exceed the maximum peak pulsed forward current
3. For marbled meat, when driven at DC forward current, it is recommended to limit the LED junction temperature to 85°C.

Downloaded from Arrow.com.

Characteristic Curves

Spectral Power Distribution Characteristics

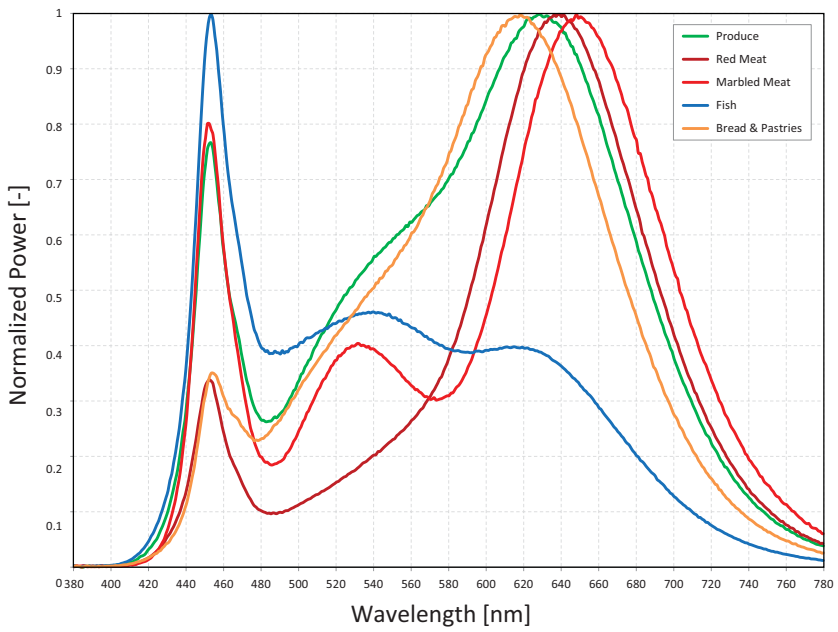

Figure 1. Typical normalized power vs. wavelength for LUXEON CoB with FreshFocus Technology at specified test current, T_j=85°C.

Light Output Characteristics

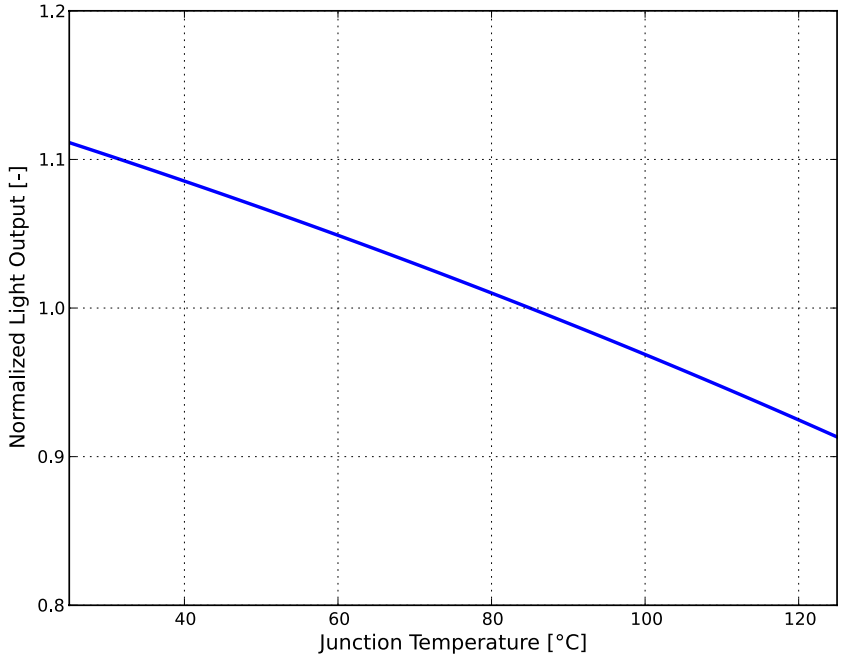

Figure 2. Typical normalized light output vs. junction temperature for LUXEON CoB with FreshFocus Technology at specified test current.

Downloaded from Arrow.com.

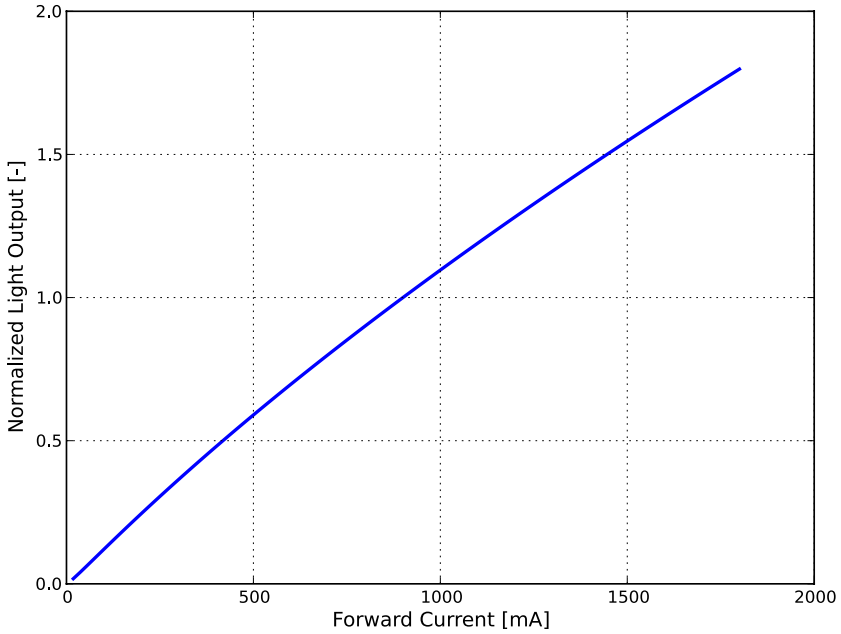

Figure 3a. Typical normalized light output vs. forward current for L2C5-xx001208E1500 at T_j=85°C.

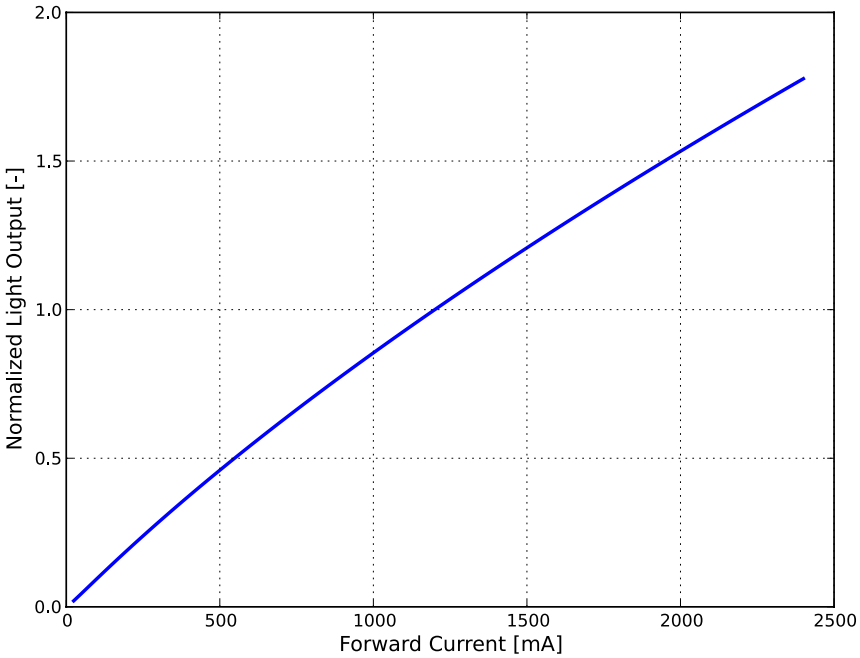

Figure 3b. Typical normalized light output vs. forward current for L2C5-xx001211E1900 at T_j=85°C.

Downloaded from Arrow.com.

Forward Current Characteristics

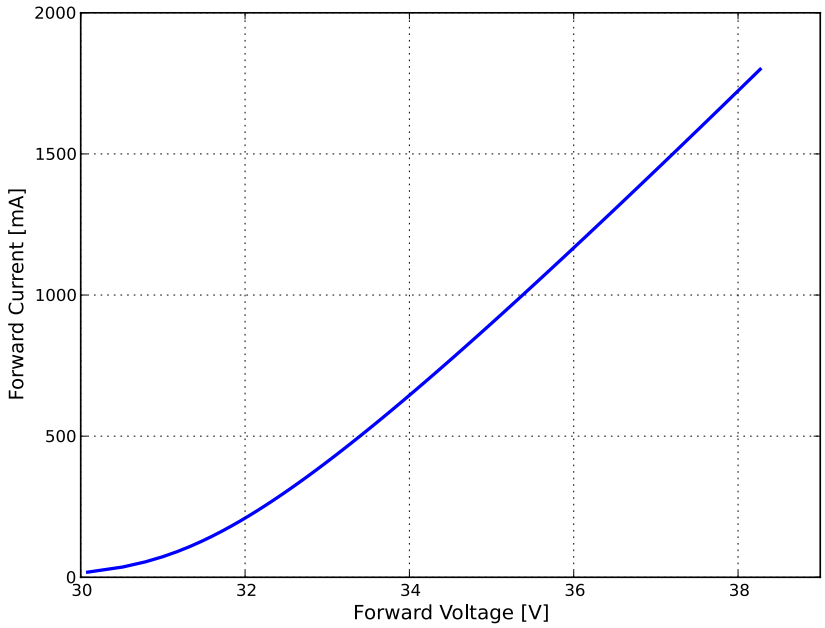

Figure 4a. Typical forward current vs. forward voltage for L2C5-xx001208E1500 at T_j=85°C.

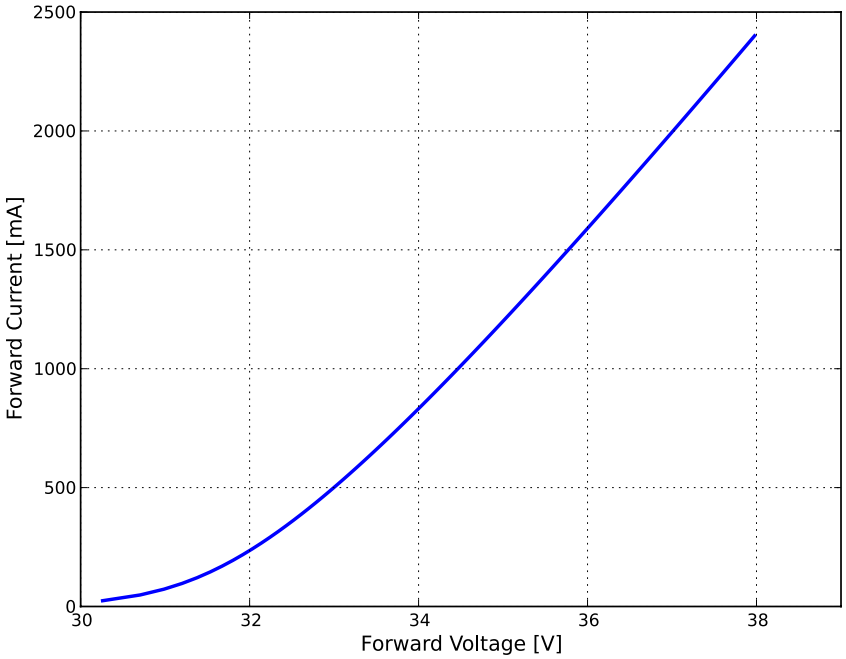

Figure 4b. Typical forward current vs. forward voltage for L2C5-xx001211E1900 at T_j=85°C.

Downloaded from Arrow.com.

Radiation Pattern Characteristics

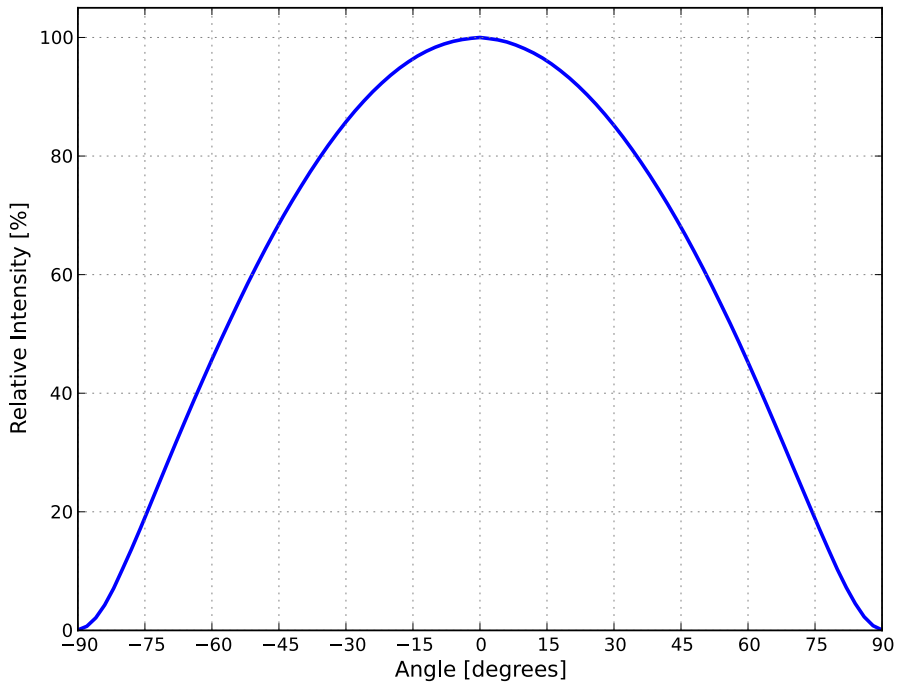

Figure 5. Typical radiation pattern for LUXEON CoB with FreshFocus Technology at specified test current, T_j=85ºC.

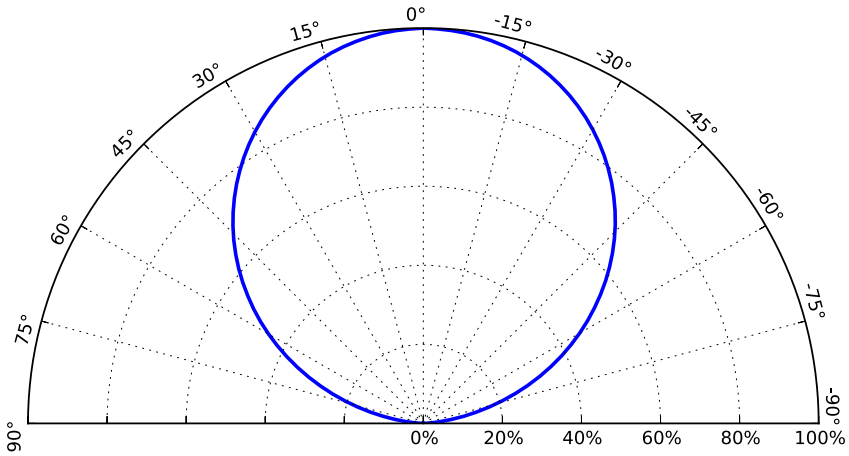

Figure 6. Typical polar radiation pattern for LUXEON CoB with FreshFocus Technology at specified test current, T_j=85ºC.

Downloaded from Arrow.com.

Color Bin Definitions

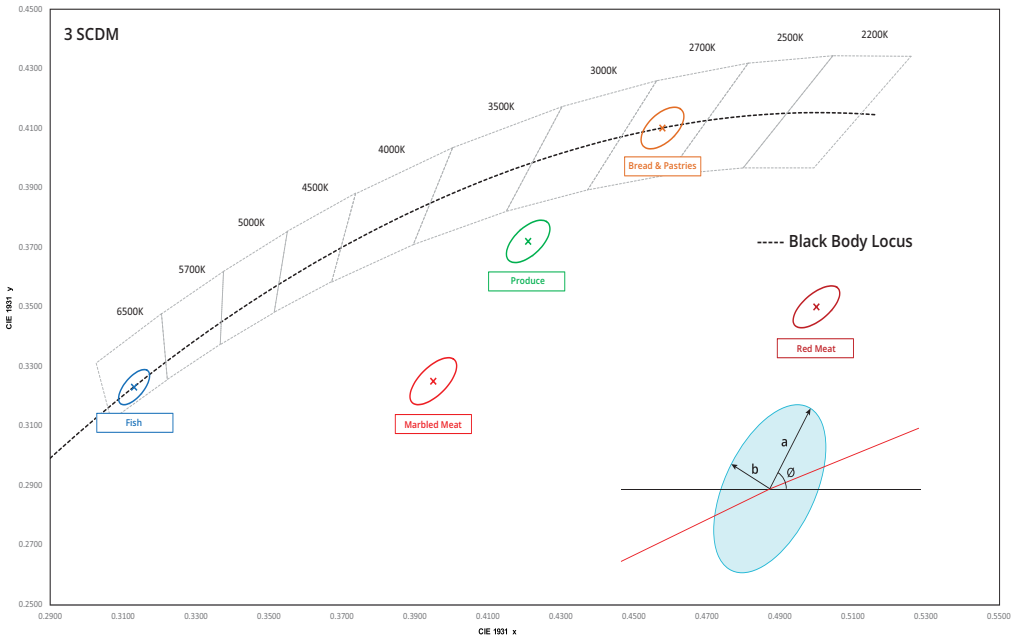

Figure 7. 3-step MacAdam ellipse illustration for Table 5.

Table 5. 3-step MacAdam ellipse color bin definition for LUXEON CoB with FreshFocus Technology.

PRODUCT	COLOR SPACE	CENTER POINT [1] (cx, cy)	MAJOR AXIS, a	MINOR AXIS, b	ELLIPSE ROTATION ANGLE, θ
Produce	Single 3-step MacAdam ellipse	(0.4210, 0.3720)	0.00834	0.00408	53.20°
Red Meat	Single 3-step MacAdam ellipse	(0.5000, 0.3500)	0.00862	0.00397	49.30°
Marbled Meat	Single 3-step MacAdam ellipse	(0.3950, 0.3250)	0.00939	0.00402	53.70°
Fish	Single 3-step MacAdam ellipse	(0.3130, 0.3230)	0.00669	0.00285	58.60°
Bread & Pastries	Single 3-step MacAdam ellipse	(0.4578, 0.4101)	0.00810	0.00420	53.70°

Notes for Table 5:
1. Lumileds maintains a tolerance of ±0.005 on x and y coordinates in the CIE 1931 color space.

Downloaded from Arrow.com.

Mechanical Dimensions

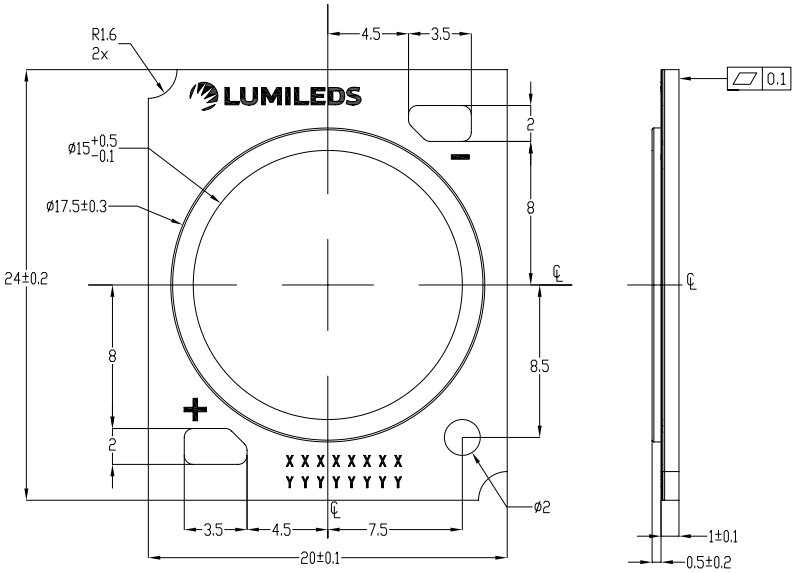

L2C5-xx001208E1500

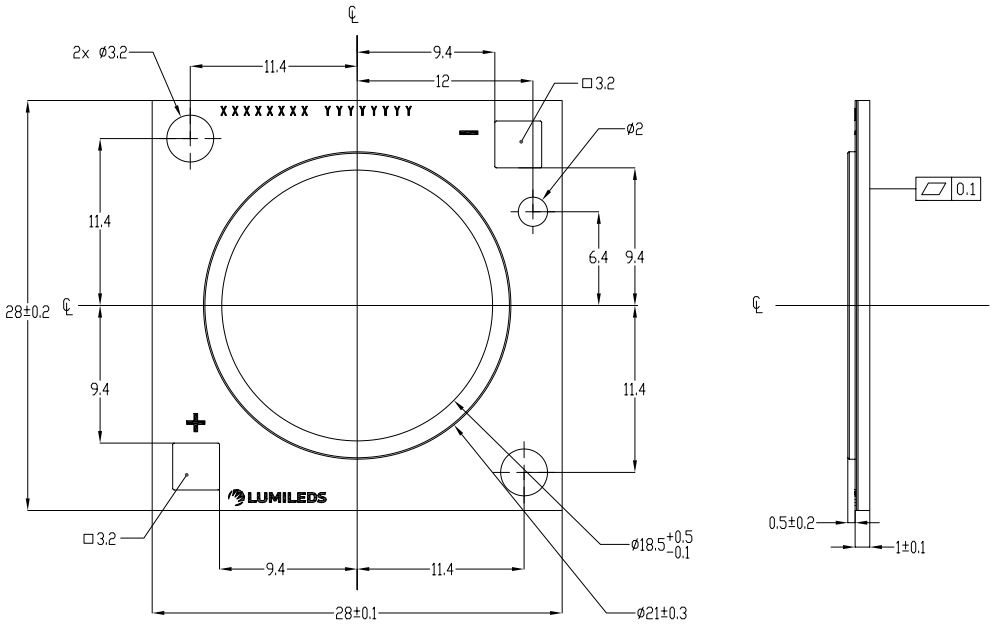

L2C5-xx001211E1900

Figure 8. Mechanical dimensions for LUXEON CoB with FreshFocus Technology.

Notes for Figure 8:
1. Drawings are not to scale.
2. All dimensions are in millimeters.

Downloaded from Arrow.com.

Packaging and Labeling Information

The LUXEON CoB with FreshFocus Technology LEDs are packaged in tubes then in a carton box. Each tube contains a specified number of LEDs. The LEDs in each tube come from a single category code, ensuring they are all well-matched for light output, color, and forward voltage. Each tube contains a rubber stopper at one end. The tube label has both alphanumeric and bar code information. The carton boxes have printed information providing part numbers with CAT codes that indicate luminous flux, color and forward voltage bins.

Table 6. Package information for LUXEON CoB with FreshFocus Technology.

PART NUMBER	TOTAL UNITS PER TUBE	TOTAL TUBES PER INNER BOX	TOTAL UNITS PER INNER BOX
L2C5-xx001208E1500	20	5	100
L2C5-xx001211E1900	10	5	50

Tube Dimensions

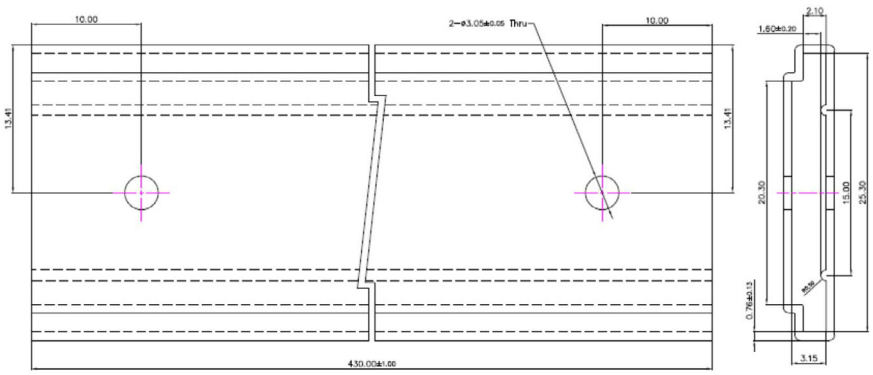

Figure 9a. Tube dimensions for L2C5-xx001208E1500.

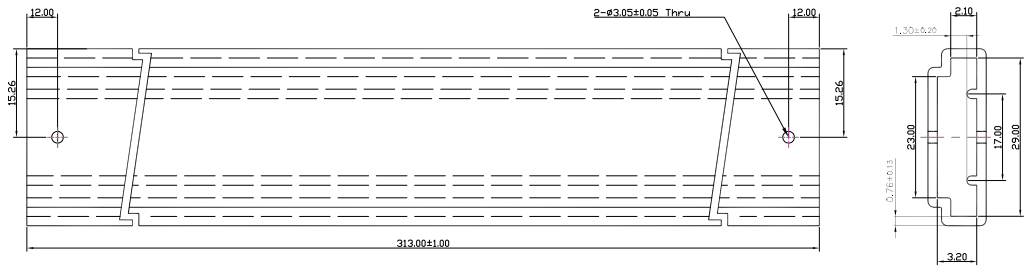

Figure 9b. Tube dimensions for L2C5-xx001211E1900.

Notes for Figures 9a and 9b:
1. Drawings not to scale.
2. All dimensions are in millimeters.

Downloaded from Arrow.com.

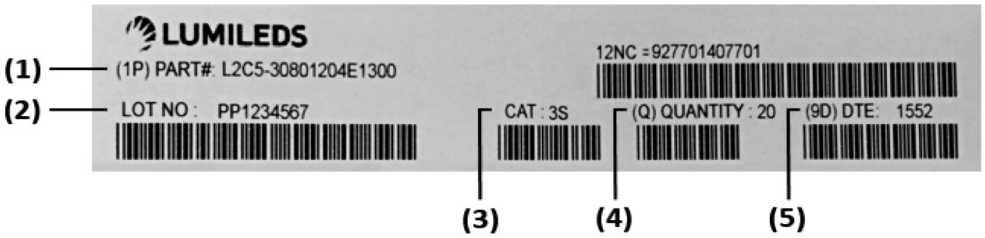

Figure 10. Example of a tube label for LUXEON CoB with FreshFocus Technology.

Notes for Figure 10 - Tube Label descriptions for customer use:
Field labels not described are for Lumileds internal use only.

1. Lumileds part number.
2. Unique production lot identification number. This number is required for traceability purpose.
3. Product category code.
4. Number of LED emitters in a tube.
5. LED test date in YYWW format.

Downloaded from Arrow.com.

Inner Box

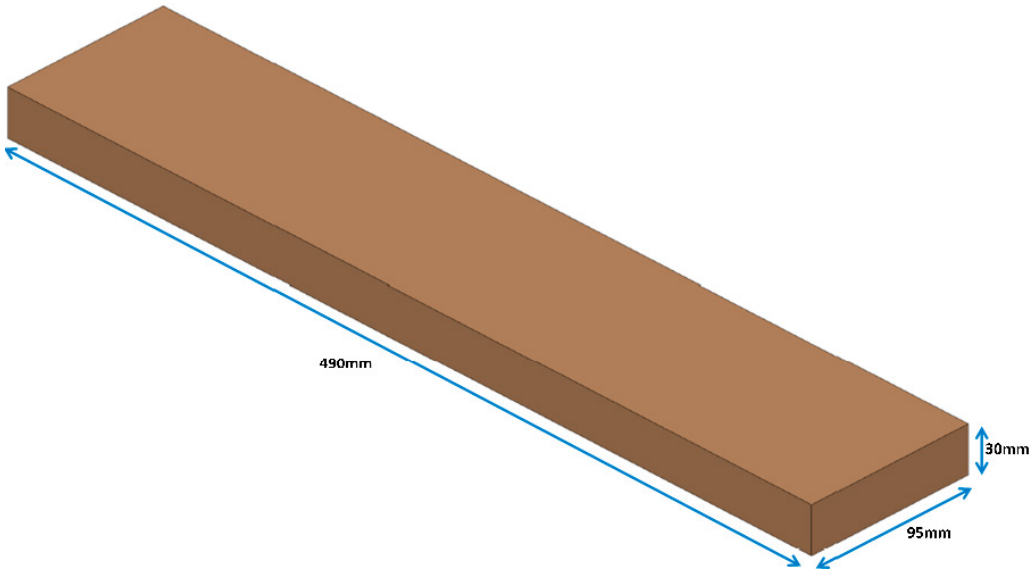

Figure 11. Dimensions for inner box packaging for LUXEON CoB with FreshFocus Technology.

Table 7. Inner box information for LUXEON CoB with FreshFocus Technology.

BOX TYPE	DIMENSIONS (mm)			AVERAGE WEIGHT (100pcs/box)	AVERAGE WEIGHT (50pcs/box)
	H	L	W		
Inner Box	30	490	95	0.340Kg	0.305Kg

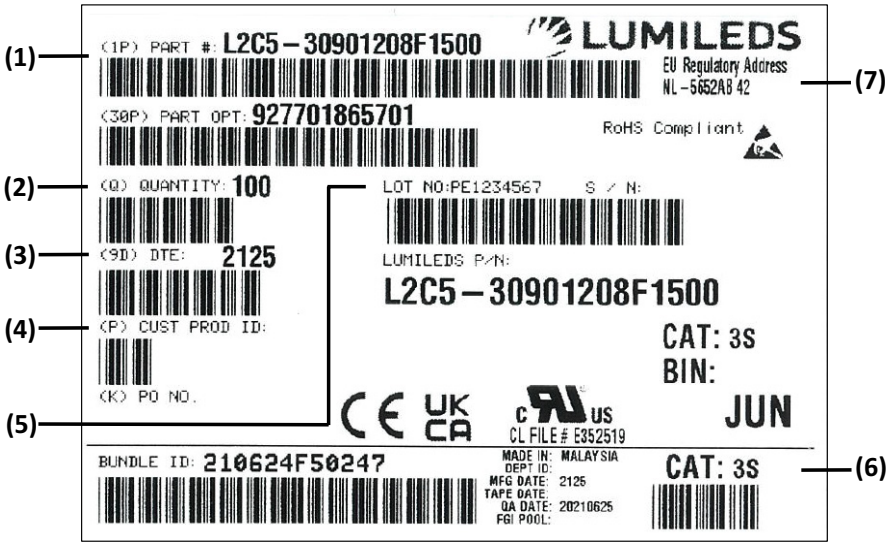

Figure 12. Example of inner box label for LUXEON CoB with FreshFocus Technology.

Notes for Figure 12 - Inner Box Label descriptions for customer use:
Field labels not described are for Lumileds internal use only.

1. Lumileds part number.
2. Number of LED emitters in a box.
3. LED test date in YYWW format.
4. Customer part number for custom requests only.
5. Unique production lot identification number. This number is required for traceability purpose.
6. Product category code.
7. EU regulatory address.

Downloaded from Arrow.com.

Outer Box

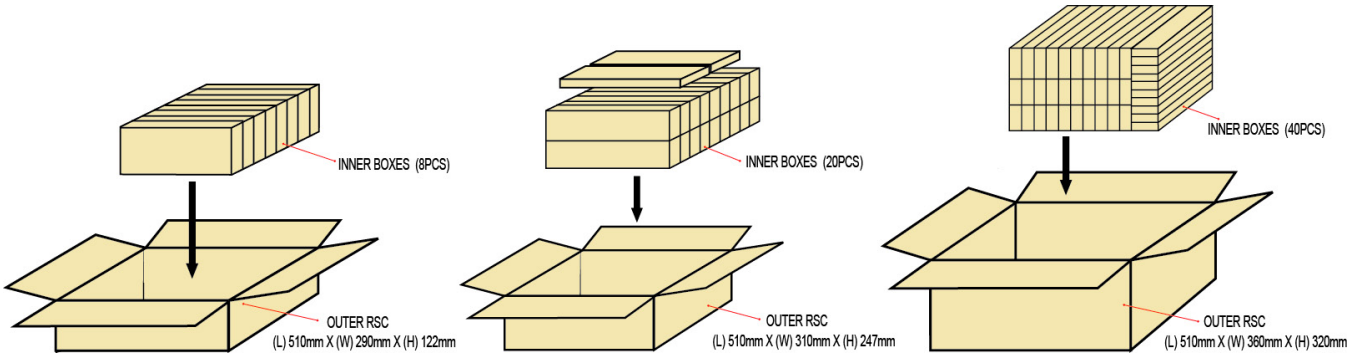

Figure 13. Dimensions for outer box packaging for LUXEON CoB with FreshFocus Technology.

Table 8. Outer box information for LUXEON CoB with FreshFocus Technology.

BOX TYPE	DIMENSIONS (mm)			MAXIMUM INNER BOXES PER OUTER BOX	MAXIMUM QUANTITY PER OUTER BOX	AVERAGE WEIGHT (100pcs/box)	AVERAGE WEIGHT (50pcs/box)
	H	L	W				
Outer Box 8 PCS	122	510	290	8	800	3.05Kg	2.77Kg
Outer Box 20 PCS	247	510	310	20	2000	7.55Kg	6.85Kg
Outer Box 40 PCS	320	510	360	40	4000	15.10Kg	13.70Kg

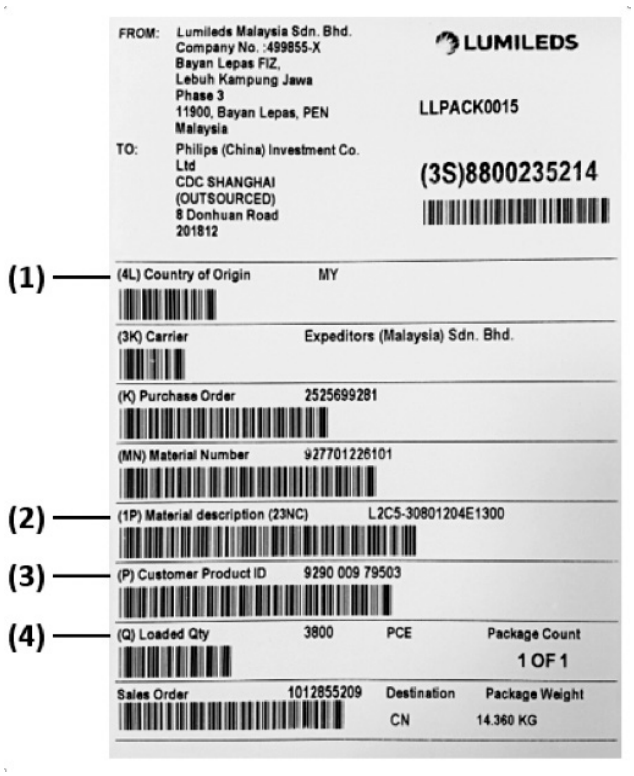

Figure 14. Example of outer box label for LUXEON CoB with FreshFocus Technology.

Notes for Figure 14 - Outer Box Label descriptions for customer use:
Field labels not described are for Lumileds internal use only.

1. Country code of origin of manufacturing of parts (e.g. MY for Malaysia, CN for China) according to ISO 3166-1 alpha-2 document.
2. Lumileds part number.
3. Customer part number for custom requests only.
4. Total number of LED emitters in a shipment box.

Downloaded from Arrow.com.

About Lumileds

Lumileds is a global leader in LED and microLED technology, innovation, and solutions for the automotive, display, illumination, mobile, and other markets where light sources are essential. Our approximately 3,500 employees operate in over 15 countries and partner with our customers to deliver never before possible solutions for lighting, safety, and well-being

To learn more about our lighting solutions, visit lumileds.com.

©2021 Lumileds Holding B.V. All rights reserved. LUXEON is a registered trademark of the Lumileds Holding B.V. in the United States and other countries.

lumileds.com

Neither Lumileds Holding B.V. nor its affiliates shall be liable for any kind of loss of data or any other damages, direct, indirect or consequential, resulting from the use of the provided information and data. Although Lumileds Holding B.V. and/or its affiliates have attempted to provide the most accurate information and data, the materials and services information and data are provided "as is," and neither Lumileds Holding B.V. nor its affiliates warrants or guarantees the contents and correctness of the provided information and data. Lumileds Holding B.V. and its affiliates reserve the right to make changes without notice. You as user agree to this disclaimer and user agreement with the download or use of the provided materials, information and data. A listing of Lumileds product/patent coverage may be accessed at lumileds.com/patents.

Downloaded from Arrow.com.