ALS31300

3D Linear Hall-Effect Sensor
with I²C Output and Advanced Low Power Management

FEATURES AND BENEFITS

- X- and Y-axis sensing of joystick position
- Z-axis sensing of "crouch" or push-button motion
- Capable of operating with back-bias magnets for joystick return-to-zero
- Ideal for battery-powered, low-voltage applications
  - □ 2.65 to 3.5 V single supply operation
  - □ 1 MHz I²C compatibility down to 1.8 V
  - □ 14 nA (typ) Sleep I_{CC}
  - □ 12 µA to 2 mA I_{CC} (typ) in low-power duty cycle mode
- Industry standard I²C interface for easy system integration
  - □ Up to 1 MHz (Fast Mode+) I²C communication
  - □ 16 selectable addresses via external resistor divider
  - □ 127 available address configurable via EEPROM
- On-chip EEPROM
  - □ Stores factory- and user-configured settings
  - □ 78 bits of user EEPROM for additional storage
  - □ On-chip charge pump for easy programming

Continued on next page...

PACKAGE: 10-Contact DFN (EJ)

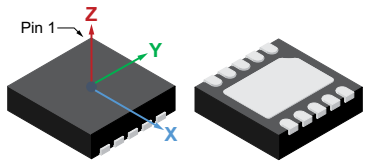

Not to scale

DESCRIPTION

The ALS31300 3DMAG™ position sensor IC provides a 12-bit digital value corresponding to the magnetic field measured in each of the X, Y, and Z axes. The ALS31300 is preconfigured for use in 3D sensing applications for head-on linear motion, slide-by position sensing, and rotation angle measurements. The ALS31300 is also offered in joystick mode, including a low gain option for the Z axis channel. This feature enables the use of a back-bias magnet to provide return-to-zero force instead of traditional spring-based solutions.

Three different factory-programmed sensitivity ranges are available: ±500 G, ±1000 G, and ±2000 G.

The I²C address of the ALS31300 can be set either by external resistors (16 unique addresses) or programmed into EEPROM via I²C (127 unique addresses), allowing for multiple devices on the same bus. The ALS31300 also includes 78 bits of user EEPROM.

Power management of the ALS31300 is highly configurable, allowing for system-level optimization of supply current and performance. Sleep mode consumes just 14 nA (typical), making the ALS31300 well suited for portable, battery-operated applications.

The ALS31300 is supplied in a 3 mm × 3 mm × 0.8 mm, 10-contact DFN package ("EJ"). This small footprint package is lead (Pb) free, with 100 % matte-tin leadframe plating.

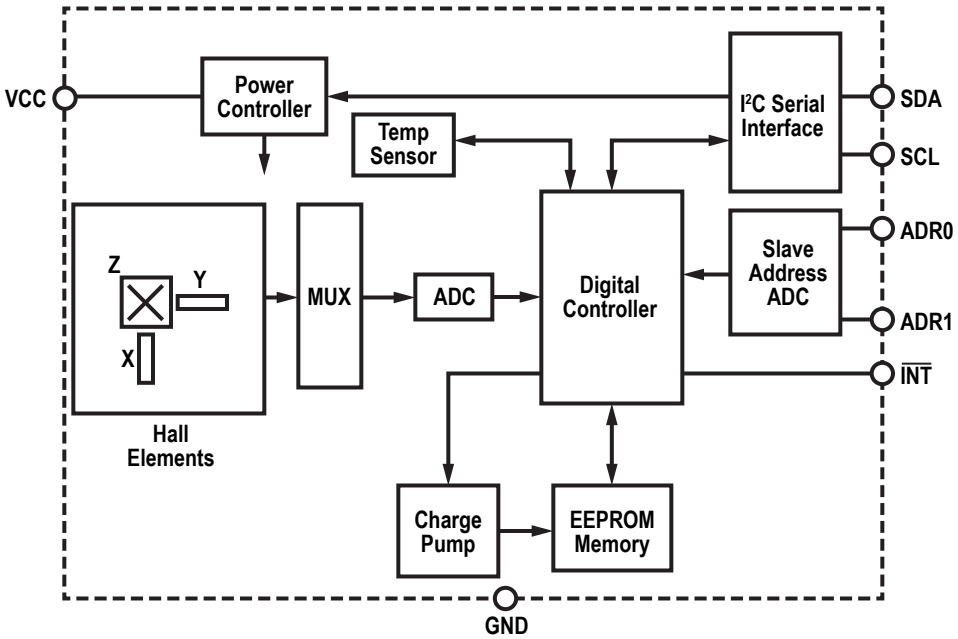

Figure 1: Functional Block Diagram

Downloaded from Arrow.com.

FEATURES AND BENEFITS (continued)

- Flexible 12-bit ADC with 10-bit ENOB (Effective Number of Bits)
- 1% (typ) accurate factory-trimmed sensitivity options (±500 G, ±1000 G, and ±2000 G full-scale input)
- Integrated temperature sensor
- Wide ambient temperature range: –40°C to 85°C
- 10-contact 3 mm × 3 mm × 0.8 mm DFN package for implementation in low-profile, high-density PCB designs and space-constrained applications

SELECTION GUIDE

Part Number	X/Y Channel Sensitivity (LSB/G) [1]	Z Channel Sensitivity (LSB/G) [1]	Packing [2]
ALS31300EEJASR-500	4	4	6000 pieces per 13-inch reel
ALS31300EEJASR-1000	2	2	
ALS31300EEJASR-2000	1	1	
ALS31300EEJASR-JOY [3]	1	0.25	

[1] 1 gauss (G) = 0.1 millitesla (mT).
[2] Contact Allegro™ for alternate packing options.
[3] Joystick devices have reduced gain on the Z axis to accommodate back bias magnets.

NAMING SPECIFICATION

ALS31300EEJASR-500

- Factory Configuration: 500 = 500 gauss
- Packing Option: SR = 6000 pieces per 13-inch reel
- Package Type: EJA = 10-contact DFN
- Operating Temperature Range (T_A): E = –40°C to 85°C
- Allegro Linear Sensor 5-digit part number

Allegro MicroSystems
955 Perimeter Road
Manchester, NH 03103-3353 U.S.A.
www.allegromicro.com

Downloaded from Arrow.com.

SPECIFICATIONS

ABSOLUTE MAXIMUM RATINGS

Characteristic	Symbol	Notes	Rating	Unit
Forward Supply Voltage	V_{CC}		5.5	V
Reverse Supply Voltage	V_{RCC}		–0.1	V
All Other Pins Forward Voltage	V_{IN}		5.5	V
All Other Pins Reverse Voltage	V_R		–0.1	V
Operating Ambient Temperature	T_A	Range E	–40 to 85	°C
Maximum Junction Temperature	$T_{J(MAX)}$		165	°C
Storage Temperature [1]	T_{stg}		–65 to 170	°C
EEPROM Write Count	–	Number of times EEPROM can be written	1000	writes

[1] Stresses beyond the Absolute Maximum Ratings may result in permanent device damage. Exposure to absolute maximum rating conditions for extended periods of time may affect device reliability.

THERMAL CHARACTERISTICS [2]

Characteristic	Symbol	Test Conditions	Value	Unit
Package Thermal Resistance [3]	$R_{\theta JA}$	Measured on 2-layer board with copper limited to the solder pads and 0.88 in.² of copper on each side	65	°C/W

[2] Thermal characteristics may require derating at maximum conditions. See application section for more information.
[3] Additional thermal information available on the Allegro website.

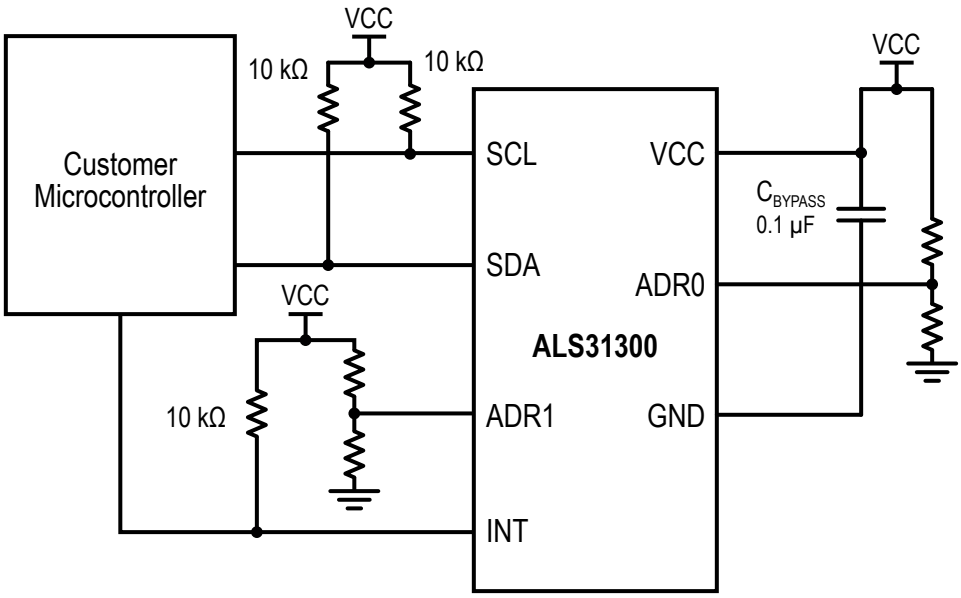

Figure 2: Typical Application

Allegro MicroSystems
955 Perimeter Road
Manchester, NH 03103-3353 U.S.A.
www.allegromicro.com

Downloaded from Arrow.com.

PINOUT DIAGRAM AND TERMINAL LIST TABLE

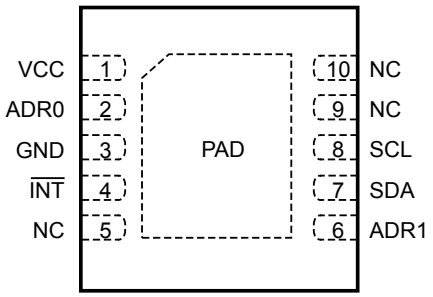

Package EJ, 10-Contact DFN Pinout Diagram

Terminal List Table

Number	Name	Function
1	VCC	Power supply input. Bypass VCC to GND with a 0.1 µF capacitor.
2	ADR0	I²C Address Select 0. Connect a resistive divider to ADR0 to select the device address. See Application Information section on addressing for more information.
3	GND	Ground signal terminal.
4	$\overline{\text{INT}}$	Interrupt output. See Application Information section on interrupt function for more information.
5, 9, 10	NC	Not internally connected. Connect to GND.
6	ADR1	I²C Address Select 1. Connect a resistive divider to ADR1 to select the device's address. See Application Information section on addressing for more information.
7	SDA	I²C serial data input/output. Open-drain.
8	SCL	I²C serial clock input
–	PAD	Exposed pad. Not connected internally.

Allegro MicroSystems
955 Perimeter Road
Manchester, NH 03103-3353 U.S.A.
www.allegromicro.com

Downloaded from Arrow.com.

ELECTRICAL CHARACTERISTICS: Valid at T_A = 25°C, V_{CC} = 3.0 V, C_{BYPASS} = 0.1 µF, unless otherwise specified

Characteristics	Symbol	Test Conditions	Min.	Typ. [1]	Max.	Unit
ELECTRICAL CHARACTERISTICS						
Supply Voltage	V_{CC}	Normal operation	2.65	3.0	3.5	V
		EEPROM programming [2]	2.8	–	3.5	V
Supply Current [3]	$I_{CC(ACTIVE)}$	Sleep = 0, or active state when sleep = 2	–	3.4	3.9	mA
	$I_{CC(INACTIVE)}$	Sleep = 2; inactive state	–	12	–	µA
	$I_{CC(LPDCM)}$	Average current in LPDCM; Sleep = 2, LPM_CNT_MAX = 7, BW Select = 6	–	12	–	µA
		Average current in LPDCM; Sleep = 2, LPP_CNT_MAX = 0, BW Select = 0	–	2	–	mA
	$I_{CC(SLEEP)}$	V_{CC} = 3.0 V, Sleep mode = 1	–	14	100	nA
	$I_{CC(EE)}$	V_{CC} = $V_{CC(MAX)}$, EEPROM programming occurring [2]	–	6.2	6.7	mA
Power-On Delay Time [4]	t_{POD}	T_A = 25°C, after V_{CC} reaches $V_{CC(MIN)}$, BW Select = 0	–	600	–	µs
EEPROM Write Delay Time	t_{EEP}	Wait after writing to EEPROM	–	50	–	ms
Linearity Sensitivity Error	E_{LIN}	Through full range of B_{IN}	–	±1.7	–	%
Sensitivity Temperature Coefficient [5]	TC_{SENS}	NdFeB magnet	–	0.12	–	% / °C
$\overline{INT}$ PIN CHARACTERISTICS						
$\overline{INT}$ Output On Resistance	R_{ON}		–	90	–	Ω
$\overline{INT}$ Input Current	$I_{INT(IN)}$	V_{IN} = 0 V to V_{CC}	–1	0	1	µA
$\overline{INT}$ Pull Up Resistance	$R_{INT(PU)}$		2.4	10	–	kΩ
$\overline{INT}$ Pull Up Voltage	$V_{INT(PU)}$		–	3.0	3.5	V
ADDRESS PIN CHARACTERISTICS [5]						
Address Value 0 Reference	V_{ADDR0}	ADR0, ADR1	–	0	0.1	× V_{CC}
Address Value 1 Reference	V_{ADDR1}	ADR0, ADR1	0.23	0.33	0.43	× V_{CC}
Address Value 2 Reference	V_{ADDR2}	ADR0, ADR1	0.57	0.67	0.77	× V_{CC}
Address Value 3 Reference	V_{ADDR3}	ADR0, ADR1	0.9	1	–	× V_{CC}
Address Pin Input Resistance	$R_{ADD(IN)}$	ADR0, ADR1	0.8	1	1.2	MΩ

[1] Typical values with ± are mean ±3 sigma.
[2] Parameter is tested at wafer probe only.
[3] I_{CC} will vary based on lower power duty cycle settings. See Application Information section on power modes.
[4] The device will not respond to I²C inputs until after the power-on delay time. t_{POD} will vary based on BW Select code, with code 0 being the slowest.
[5] Based on characterization data and guaranteed by design. Not verified at final test.

Allegro MicroSystems
955 Perimeter Road
Manchester, NH 03103-3353 U.S.A.
www.allegromicro.com

Downloaded from Arrow.com.

I²C INTERFACE CHARACTERISTICS [1]: Valid at T_A = 25°C, C_{BYPASS} = 0.1 µF, R_{PU} = 10 kΩ, and I²C Clock Speed (FCLK) = 400 kHz, unless otherwise specified

Characteristics	Symbol	Test Conditions	Min.	Typ. [1]	Max.	Unit
Bus Free Time Between Stop and Start	t_{BF}		1.3	–	–	µs
Hold Time Start Condition	$t_{STA(H)}$		0.6	–	–	µs
Setup Time for Repeated Start Condition	$t_{STA(S)}$		0.6	–	–	µs
SCL Low Time	t_{LOW}		1.3	–	–	µs
SCL High Time	t_{HIGH}		0.6	–	–	µs
Data Setup Time	$t_{DAT(S)}$		100	–	–	ns
Data Hold Time	$t_{DAT(H)}$		0	–	900	ns
Setup Time for Stop Condition	$t_{STO(S)}$		0.6	–	–	µs
Logic Input Low Level (SDA, SCL Pins)	$V_{I(L)}$	I²C threshold = 0; 3.0 V Compatible Mode	–	–	0.9	V
		I²C threshold = 1; 1.8 V Compatible Mode	–	–	0.54	V
Logic Input High Level (SDA, SCL Pins)	$V_{I(H)}$	I²C threshold = 0; 3.0 V Compatible Mode	2.1	–	–	V
		I²C threshold = 1; 1.8 V Compatible Mode	1.26	–	–	V
Logic Input Current	$I_{I2C(IN)}$	V_{IN} = 0 V to V_{CC}, R_{PU} = 2.4 kΩ	–1	0	1	µA
Output Voltage (SDA Pin)	$V_{O(L)}$	I_{LOAD} = 1.5 mA	–	–	0.36	V
Clock Frequency (SCL Pin)	f_{CLK}		–	400	1000	kHz
Output Fall Time (SDA Pin)	t_f	R_{PU} = 2.4 kΩ, C_{BUS} = 100 pF	–	–	250	ns
I²C Pull-Up Resistance	$R_{I2C(PU)}$		2.4	10	–	kΩ
I²C Pull-Up Voltage	$V_{I2C(PU)}$		1.8	3.0	3.3	V
Total Capacitive Load for SDL and SDA Buses	C_{BUS}		–	–	100	pF

[1] I²C Interface Characteristics are guaranteed by design and are not factory tested.

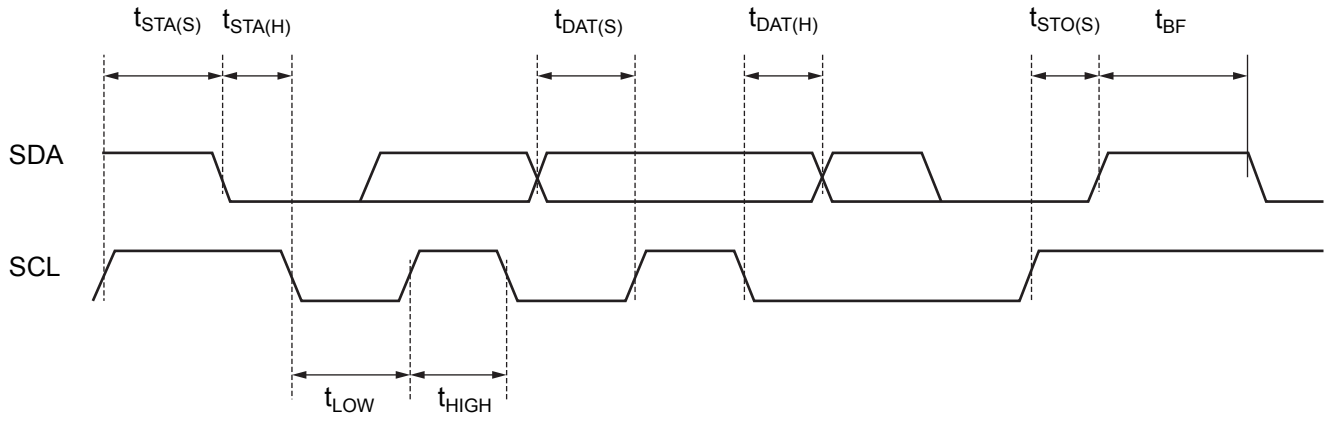

Figure 3: I²C Interface Timing Diagram

Allegro MicroSystems
955 Perimeter Road
Manchester, NH 03103-3353 U.S.A.
www.allegromicro.com

Downloaded from Arrow.com.

ALS31300EEJASR-500 PERFORMANCE CHARACTERISTICS: Valid at T_A = 25°C, V_{CC} = 3.0 V, and C_{BYPASS} = 0.1 µF, unless otherwise specified

Characteristics	Symbol	Test Conditions	Min.	Typ. [1]	Max.	Unit
NOMINAL PERFORMANCE						
Optimized Sensing Range	B_{IN}		–500	–	500	G
Sensitivity	SENS		–	4	–	LSB/G
Zero-Field Offset Code	QVO	B_{IN} = 0 G	–	0	–	LSB
ACCURACY PERFORMANCE						
Offset Error X/Y Axes	$E_{OFF(XY)}$	B_{IN} = 0 G	–24	±13.4	24	LSB
Offset Error Z Axis	$E_{OFF(Z)}$	B_{IN} = 0 G	–24	±11.8	24	LSB
Sensitivity Error X/Y Axes	$E_{SENS(XY)}$	B_{IN} = $B_{IN(MAX)}$	–2.5	±0.7	2.5	%
Sensitivity Error Z Axis	$E_{SENS(Z)}$	B_{IN} = $B_{IN(MAX)}$	–4.5	±0.6	4.5	%
Sensitivity Mismatch Error X Axis to Y Axis	$E_{MATCH(XY)}$	B_{IN} = $B_{IN(MAX)}$	–	±1.3	–	%
Sensitivity Mismatch Error X/Y Axes to Z Axis	$E_{MATCH(XYZ)}$	B_{IN} = $B_{IN(MAX)}$	–	±1.3	–	%
RMS Noise X/Y Channels [2]	$N_{RMS(XY)}$	BW Select = 0	–	4	–	LSB
RMS Noise Z Channel [2]	$N_{RMS(Z)}$	BW Select = 0	–	1.5	–	LSB
LIFETIME DRIFT CHARACTERISTICS						
Offset Error Lifetime Drift	E_{OFF_DRIFT}		–10	–	10	LSB
Sensitivity Error Lifetime Drift	E_{SENS_DRIFT}		–2.6	–	2.6	%

[1] Typical values with ± are 3 sigma values.
[2] RMS noise equivalent to 1 sigma distribution.

Allegro MicroSystems
955 Perimeter Road
Manchester, NH 03103-3353 U.S.A.
www.allegromicro.com

Downloaded from Arrow.com.

ALS31300EEJASR-1000 PERFORMANCE CHARACTERISTICS: Valid at T_A = 25°C, V_{CC} = 3.0 V, and C_{BYPASS} = 0.1 µF, unless otherwise specified

Characteristics	Symbol	Test Conditions	Min.	Typ. [1]	Max.	Unit
NOMINAL PERFORMANCE						
Optimized Sensing Range	B_{IN}		–1000	–	1000	G
Sensitivity	SENS		–	2	–	LSB/G
Zero-Field Offset Code	QVO	B_{IN} = 0 G	–	0	–	LSB
ACCURACY PERFORMANCE						
Offset Error X/Y Axes	$E_{OFF(XY)}$	B_{IN} = 0 G	–12	–	12	LSB
Offset Error Z Axis	$E_{OFF(Z)}$	B_{IN} = 0 G	–12	–	12	LSB
Sensitivity Error X/Y Axes	$E_{SENS(XY)}$	B_{IN} = $B_{IN(MAX)}$	–2.5	±0.7	2.5	%
Sensitivity Error Z Axis	$E_{SENS(Z)}$	B_{IN} = $B_{IN(MAX)}$	–4.5	±0.6	4.5	%
Sensitivity Mismatch Error X Axis to Y Axis	$E_{MATCH(XY)}$	B_{IN} = $B_{IN(MAX)}$	–	±1.3	–	%
Sensitivity Mismatch Error X/Y Axes to Z Axis	$E_{MATCH(XYZ)}$	B_{IN} = $B_{IN(MAX)}$	–	±1.3	–	%
RMS Noise X/Y Channels [2]	$N_{RMS(XY)}$	BW Select = 0	–	2	–	LSB
RMS Noise Z Channel [2]	$N_{RMS(Z)}$	BW Select = 0	–	1.5	–	LSB
LIFETIME DRIFT CHARACTERISTICS						
Offset Error Lifetime Drift	E_{OFF_DRIFT}		–10	–	10	LSB
Sensitivity Error Lifetime Drift	E_{SENS_DRIFT}		–2.6	–	2.6	%

[1] Typical values with ± are 3 sigma values.
[2] RMS noise equivalent to 1 sigma distribution.

Allegro MicroSystems
955 Perimeter Road
Manchester, NH 03103-3353 U.S.A.
www.allegromicro.com

Downloaded from Arrow.com.

ALS31300EEJASR-2000 PERFORMANCE CHARACTERISTICS: Valid at T_A = 25°C, V_{CC} = 3.0 V, and C_{BYPASS} = 0.1 µF, unless otherwise specified

Characteristics	Symbol	Test Conditions	Min.	Typ. [1]	Max.	Unit
NOMINAL PERFORMANCE						
Optimized Sensing Range	B_{IN}		–2000	–	2000	G
Sensitivity	SENS		–	1	–	LSB/G
Zero-Field Offset Code	QVO	B_{IN} = 0 G	–	0	–	LSB
ACCURACY PERFORMANCE						
Offset Error X/Y Axes	$E_{OFF(XY)}$	B_{IN} = 0 G	–12	–	12	LSB
Offset Error Z Axis	$E_{OFF(Z)}$	B_{IN} = 0 G	–12	–	12	LSB
Sensitivity Error X/Y Axes	$E_{SENS(XY)}$	B_{IN} = $B_{IN(MAX)}$	–2.5	±0.7	2.5	%
Sensitivity Error Z Axis	$E_{SENS(Z)}$	B_{IN} = $B_{IN(MAX)}$	–4.5	±0.6	4.5	%
Sensitivity Mismatch Error X Axis to Y Axis	$E_{MATCH(XY)}$	B_{IN} = $B_{IN(MAX)}$	–	±1.3	–	%
Sensitivity Mismatch Error X/Y Axes to Z Axis	$E_{MATCH(XYZ)}$	B_{IN} = $B_{IN(MAX)}$	–	±1.3	–	%
RMS Noise X/Y Channels [2]	$N_{RMS(XY)}$	BW Select = 0	–	1.5	–	LSB
RMS Noise Z Channel [2]	$N_{RMS(Z)}$	BW Select = 0	–	1.5	–	LSB
LIFETIME DRIFT CHARACTERISTICS						
Offset Error Lifetime Drift	E_{OFF_DRIFT}		–10	–	10	LSB
Sensitivity Error Lifetime Drift	E_{SENS_DRIFT}		–2.6	–	2.6	%

[1] Typical values with ± are 3 sigma values.
[2] RMS noise equivalent to 1 sigma distribution.

Allegro MicroSystems
955 Perimeter Road
Manchester, NH 03103-3353 U.S.A.
www.allegromicro.com

Downloaded from Arrow.com.

ALS31300EEJASR-JOY PERFORMANCE CHARACTERISTICS: Valid at T_A = 25°C, V_{CC} = 3.0 V, and C_{BYPASS} = 0.1 µF, unless otherwise specified

Characteristics	Symbol	Test Conditions	Min.	Typ. [1]	Max.	Unit
NOMINAL PERFORMANCE						
Optimized Sensing Range	B_{IN}	X and Y axes	–2000	–	2000	G
		Z axis	–8000	–	8000	
Sensitivity	SENS	X and Y axes	–	1	–	LSB/G
		Z axis	–	0.25	–	
Zero-Field Offset Code	QVO	B_{IN} = 0 G	–	0	–	LSB
ACCURACY PERFORMANCE						
Offset Error X/Y Axes	$E_{OFF(XY)}$	B_{IN} = 0 G	–12	±13.4	12	LSB
Offset Error Z Axis	$E_{OFF(Z)}$	B_{IN} = 0 G	–12	±11.8	12	LSB
Sensitivity Error X/Y Axes	$E_{SENS(XY)}$	$B_{IN} = B_{IN(MAX)}$	–2.5	±0.7	2.5	%
Sensitivity Error Z Axis	$E_{SENS(Z)}$	$B_{IN} = B_{IN(MAX)}$	–4.5	±0.6	4.5	%
Sensitivity Mismatch Error X Axis to Y Axis	$E_{MATCH(XY)}$	$B_{IN} = B_{IN(MAX)}$	–	±1.3	–	%
RMS Noise X/Y Channels [2]	$N_{RMS(XY)}$	BW Select = 0	–	1.5	–	LSB
RMS Noise Z Channel [2]	$N_{RMS(Z)}$	BW Select = 0	–	1.5	–	LSB
LIFETIME DRIFT CHARACTERISTICS						
Offset Error Lifetime Drift	E_{OFF_DRIFT}		–10	–	10	LSB
Sensitivity Error Lifetime Drift	E_{SENS_DRIFT}		–2.6	–	2.6	%

[1] Typical values with ± are 3 sigma values.
[2] RMS noise equivalent to 1 sigma distribution.

Allegro MicroSystems
955 Perimeter Road
Manchester, NH 03103-3353 U.S.A.
www.allegromicro.com

Downloaded from Arrow.com.

MEMORY MAP

The memory map below lists the locations of accessible registers on the ALS31300. See the following sections on EEPROM and Primary Registers for detailed information.

Reserved	Read Only	Read/Write Volatile	Read/Write EEPROM	Read/Write 1 to Clear	Clear on Read

Table 1: Memory Map

Address	31	30	29	28	27	26	25	24	23	22	21	20	19	18	17	16	15	14	13	12	11	10	9	8	7	6	5	4	3	2	1	0
0x02	RESERVED								BW Select			Hall Mode		I²C CRC Enable	Disable Slave ADC	Slave Address							I²C Threshold	Channel Z Enable	Channel Y Enable	Channel X Enable	$\overline{\text{INT}}$ Latch Enable	Customer EE				
0x03	RESERVED							Signed $\overline{\text{INT}}$ Enable	$\overline{\text{INT}}$ Mode	$\overline{\text{INT}}$ EEPROM Status	$\overline{\text{INT}}$ EEPROM Enable	Z $\overline{\text{INT}}$ Enable	Y $\overline{\text{INT}}$ Enable	X $\overline{\text{INT}}$ Enable	Z $\overline{\text{INT}}$ Threshold						Y $\overline{\text{INT}}$ Threshold						X $\overline{\text{INT}}$ Threshold					
0x0D	RESERVED							Customer EEPROM																								
0x0E	RESERVED							Customer EEPROM																								
0x0F	RESERVED							Customer EEPROM																								
0x27	RESERVED																									Low Power Counter			I²C Loop Mode		Sleep	
0x28	X_Axis_MSBs								Y_Axis_MSBs								Z_Axis_MSBs								New Data	$\overline{\text{INT}}$	Temperature MSBs					
0x29	RESERVED											$\overline{\text{INT}}$ Write	X_Axis_LSBs				Y_Axis_LSBs				Z_Axis_LSBs				Hall Status		Temperature LSBs					
Address	31	30	29	28	27	26	25	24	23	22	21	20	19	18	17	16	15	14	13	12	11	10	9	8	7	6	5	4	3	2	1	0

Allegro MicroSystems
955 Perimeter Road
Manchester, NH 03103-3353 U.S.A.
www.allegromicro.com

Downloaded from Arrow.com.

EEPROM

The following EEPROM addresses are customer accessible and may be read at any time, with or without entering the customer access code. Customer Access mode must be enabled to write to any of these registers.

Reserved	Read Only	Read/Write Volatile	Read/Write EEPROM	Write 1 to Clear	Clear on Read

Table 2: EEPROM 0x02

Address	Bits	Default	Name	Description
0x02	31:24	0	Reserved	Reserved
	23:21	0	BW Select	Used to control the sample rate of the device. Resolution can be traded for faster samples. 0 = Slowest sample rate, highest resolution 7 = Fastest sample rate, lowest resolution See *Bandwidth Selection* section.
	20:19	See Selection Guide	Hall Mode	Controls the operation mode of the Hall plates. 0 = Single-Ended Hall Mode 1 = Reserved 2 = Common Hall Mode 3 = Reserved See *Hall Modes* section.
	18	0	I²C CRC Enable	I²C Cyclic Redundancy Check (CRC) output byte enabled. Enable CRC for applications that require high data integrity. 0 = Disabled 1 = Enabled See *CRC* section
	17	0	Disable Slave ADC	Disable the external slave address pins. When set, the EEPROM setting in Slave Address is used to determine the slave address. See *I²C Addressing* section.
	16:10	0	Slave Address	Used to set the slave address for the device when either Disable Slave ADC is set, or the voltages on the slave address pins are set to V_{CC}. See *I²C Addressing* section.
	9	1	I²C Threshold	Enables 1.8 V or 3 V compatible I²C. 0 = 3 V compatible mode (Increases threshold for logic input high level) 1 = 1.8 V compatible mode
	8	1	Channel Z Enable	Enables the Z channel. Disable for faster update rate if this axis is not needed.
	7	1	Channel Y Enable	Enables the Y channel. Disable for faster update rate if this axis is not needed.
	6	1	Channel X Enable	Enables the X channel. Disable for faster update rate if this axis is not needed.
	5	0	$\overline{\text{INT}}$ Latch Enable	Enables volatile latching of the $\overline{\text{INT}}$ signal. When set, if an interrupt event occurs, the $\overline{\text{INT}}$ status bit and $\overline{\text{INT}}$ output will both remain latched even after the event goes away. See *Interrupt* section.
	4:0	0	Customer EEPROM	Customer non-volatile EEPROM. Can be used to store any customer information. Does not affect device operation.

Allegro MicroSystems
955 Perimeter Road
Manchester, NH 03103-3353 U.S.A.
www.allegromicro.com

Downloaded from Arrow.com.

Reserved	Read Only	Read/Write Volatile	Read/Write EEPROM	Write 1 to Clear	Clear on Read

Table 3: EEPROM 0x03

Address	Bits	Default	Name	Description
0x03	31:25	0	Reserved	Reserved
	24	0	Signed $\overline{\text{INT}}$ Enable	Controls if the interrupt threshold(s) are absolute or signed. In absolute mode, an interrupt is triggered if the applied field crosses the threshold in either the positive or negative direction. In signed mode, an interrupt is only triggered if the applied field passes the threshold in a single direction specified by the user. 0 = Absolute 1 = Signed See *Interrupt* section.
	23	0	$\overline{\text{INT}}$ Mode	Controls the behavior of $\overline{\text{INT}}$. 0 = Threshold Mode. Compares the sensor's most recent measurement to the specified event conditions. 1 = Delta Mode. Used in combination with LPDCM. Compares the sensor's most recent measurement to the first measurement when the device entered LPDCM and the specified event conditions. See *Interrupt* section.
	22	0	$\overline{\text{INT}}$ EEPROM Status	Non-volatile EEPROM storage to indicate an interrupt event has occurred. See *Interrupt* section.
	21	0	$\overline{\text{INT}}$ EEPROM Enable	If set, $\overline{\text{INT}}$ EEPROM Status will be automatically written when an interrupt event occurs. See *Interrupt* section.
	20	0	Z $\overline{\text{INT}}$ Enable	$\overline{\text{INT}}$ enable for Z axis. See *Interrupt* section.
	19	0	Y $\overline{\text{INT}}$ Enable	$\overline{\text{INT}}$ enable for Y axis. See *Interrupt* section.
	18	0	X $\overline{\text{INT}}$ Enable	$\overline{\text{INT}}$ enable for X axis. See *Interrupt* section.
	17:12	0	Z $\overline{\text{INT}}$ Threshold	$\overline{\text{INT}}$ threshold for Z axis. Affected by Signed $\overline{\text{INT}}$ Enable. See *Interrupt* section.
	11:6	0	Y $\overline{\text{INT}}$ Threshold	$\overline{\text{INT}}$ threshold for Y axis. Affected by Signed $\overline{\text{INT}}$ Enable. See *Interrupt* section.
	5:0	0	X $\overline{\text{INT}}$ Threshold	$\overline{\text{INT}}$ threshold for X axis. Affected by Signed $\overline{\text{INT}}$ Enable. See *Interrupt* section.

Table 4: EEPROM 0x0D, 0x0E and 0x0F

Address	Bits	Default	Name	Description
0x0D	25:0	0	Customer EEPROM	Customer non-volatile EEPROM space. Can be used to store any customer information. Does not affect device operation.
0x0E	25:0	0	Customer EEPROM	Customer non-volatile EEPROM space. Can be used to store any customer information. Does not affect device operation.
0x0F	25:0	0	Customer EEPROM	Customer non-volatile EEPROM space. Can be used to store any customer information. Does not affect device operation.

Allegro MicroSystems
955 Perimeter Road
Manchester, NH 03103-3353 U.S.A.
www.allegromicro.com

Downloaded from Arrow.com.

PRIMARY REGISTERS

The following registers are customer accessible and may be read at any time, with or without entering the customer access code. Customer Access mode must be enabled to write to any of these registers, with the exception of sleep, which can be written to regardless of access mode.

Reserved	Read Only	Read/Write Volatile	Read/Write EEPROM	Write 1 to Clear	Clear on Read

Table 5: Volatile 0x27

Address	Bits	Name	Description
0x27	31:7	Reserved	Reserved
	6:4	Low-Power Mode Count Max	Sets max counter for inactive time during low-power duty cycle mode. ALS31300 offers 8 discrete time frames for inactive time. See Application Information section on low-power modes.
	3:2	I²C Loop-Mode	Sets I²C readback mode to single read, fast loop, or full loop mode. See Application Information section on readback modes.
	1:0	Sleep	Sets device operating mode to full active, ultralow power sleep mode, or low-power duty cycle mode. See Application Information section on low-power modes.

Table 6: Volatile 0x28

Address	Bits	Name	Description
0x28	31:24	X Axis MSBs	MSBs of the register proportional to the field strength in the X direction.
	23:16	Y Axis MSBs	MSBs of the register proportional to the field strength in the Y direction.
	15:8	Z Axis MSBs	MSBs of the register proportional to the field strength in the Z direction.
	7	New Data	New data update flag for XYZ. Cleared when read. Set when a new update is available. Use this bit when sampling the device faster than the update rate to avoid averaging the same sample twice. This bit clears when address 0x28 is read.
	6	Interrupt	Set when the interrupt thresholds are crossed. Latched if INT Latch Enable is set. In latched mode, latch can be cleared by writing a 1 to this bit location.
	5:0	Temperature MSBs	MSBs of the temperature register proportional to the absolute temperature.

Table 7: Volatile 0x29

Address	Bits	Name	Description
0x29	31:21	Reserved	Reserved
	20	Interrupt Write	Status bit to indicate if an interrupt write is in progress. Will be set if Interrupt EEPROM Enable is set and an interrupt event has occurred. This field will be set while the device is writing the Interrupt EEPROM Status bit in address 0x03. When the writing is complete, this bit will clear automatically.
	19:16	X Axis LSBs	LSBs of the register proportional to the field-strength in the X direction.
	15:12	Y Axis LSBs	LSBs of the register proportional to the field-strength in the Y direction.
	11:8	Z Axis LSBs	LSBs of the register proportional to the field-strength in the Z direction.
	7:6	Hall Mode Status	The Hall mode of the current readout. Will be primarily used if 0x02 Hall mode is set to alternating mode. See Application Information section on Hall modes. 0 = Value measured in Single-Ended Hall Mode 1 = Reserved 2 = Value measured in Common Hall Mode
	5:0	Temperature LSBs	LSBs of the temperature register proportional to the absolute temperature.

Allegro MicroSystems
955 Perimeter Road
Manchester, NH 03103-3353 U.S.A.
www.allegromicro.com

Downloaded from Arrow.com.

APPLICATION INFORMATION

Magnetic Sensor(s) Output

The ALS31300 provides a 12-bit digital output value that is proportional to the magnetic field applied normally to any of the Hall elements. The most and least significant bits for X, Y, and Z channels are separated across two primary registers: 0x28 and 0x29.

The process begins with a full 8-byte read of MSB and LSB registers to construct a 12-bit 2's complement signed value. All data must be read in a single 8-byte read when combining registers or the result will be the combination of two separate samples in time. The 12 bits of data are combined per Table 8.

Table 8: Combined MSBs and LSBs for Magnetic Data

BIT	11	10	9	8	7	6	5	4	3	2	1	0
DATA	MSB Data								LSB Data			

Assume that a full 8-byte read returns the following binary data for a single axis:

MSB = 1100_0000
LSB = 0110

The combined data {MSB;LSB} = 1100_0000_0110, or the decimal equivalent = –1018. This value can then be converted to gauss by dividing by the sensitivity of the ALS31300.

An ALS31300 with 500 gauss full-scale input range will have a typical sensitivity of 4 LSB/gauss. The 12-bit magnetic data value can be converted to gauss using the equation:

$$gauss = -1018\ LSB \div 4\ LSB/G = -254\ gauss$$

Example source code for combining MSB and LSB data is available in the 3D Linear and 2D Angle Sensing Application Note.

Temperature Sensor Output

The ALS31300 provides a 12-bit digital output that is proportional to the junction temperature of the IC. Similar to magnetic data, the most and least significant bits for temperature are separated across two primary registers: 0x28 and 0x29. Temperature is a 12-bit coded value. Temperature can be calculated by:

$$temp(°C) = \frac{302(value - 1708)}{4096}$$

After power-on, the temperature sensor is stable within 8 ms and it is updated every 8 ms after that. In low-power duty cycle mode, the temperature sensor is updated once every 10 low power cycles.

Power Modes

Power management on the ALS31300 is user-selectable and highly configurable, allowing for system-level optimization of current consumption and performance. The ALS31300 supports three different power modes: Active Mode, Sleep Mode, and Low-Power Duty Cycle Mode (LPDCM). The operating mode of the ALS31300 will be determined by the value in Sleep, Address 0x27, bits 1:0, described in Table 9.

Table 9: Sleep

Address	Bits	Value	Operating Mode
0x27	1:0	0	Active Mode
		1	Sleep Mode
		2	Low-Power Duty Cycle Mode

SLEEP MODE

In Sleep Mode, the ALS31300 enters a near powered-off state where it consumes the minimum amount of current (14 nA typical). In this mode, the device will still respond to I²C commands, but will not update magnetic or temperature data. Sleep mode is valuable in applications where the supply voltage cannot be disabled but minimal power consumption is required. The time it takes to exit sleep mode is equivalent to Power-On Delay Time (t_{POD}).

LOW-POWER DUTY CYCLE MODE (LPDCM)

In Low-Power Duty Cycle Mode (LPDCM), the ALS31300 toggles between Active and Inactive states, reducing overall current consumption. The average I_{CC} for the ALS31300 during Low-Power Duty Cycle Mode will vary based on the settings used and may range anywhere from 2 mA to 12 µA (typical). The diagram in Figure 4 shows the profile of I_{CC} as the ALS31300 toggles between Active and Inactive states during Low-Power Duty Cycle Mode.

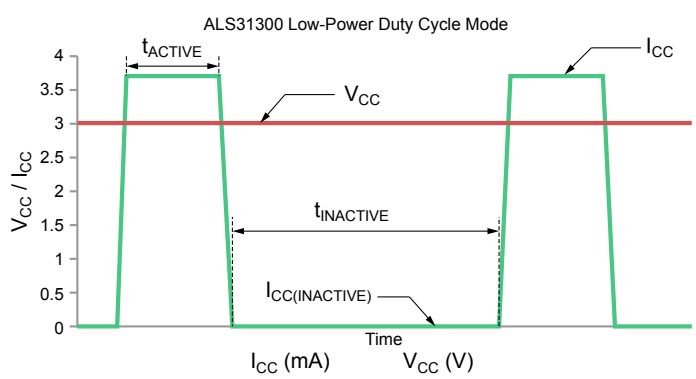

Figure 4: I_{CC} in Low-Power Duty Cycle Mode

Allegro MicroSystems
955 Perimeter Road
Manchester, NH 03103-3353 U.S.A.
www.allegromicro.com

Downloaded from Arrow.com.

The inactive time will be determined by the value set in *Low-Power Mode Count Max*, Address 0x27, bits 6:4. The ALS31300 offers eight discrete time frames, explained in Table 10. Typical I_{CC} consumed in the inactive state is 12 µA.

Table 10: LPDCM Inactive Time ($t_{INACTIVE}$)

Address	Bits	Value	$t_{INACTIVE}$ (typ) (ms)
0x27	6:4	0	0.5
		1	1
		2	5
		3	10
		4	50
		5	100
		6	500
		7	1000

The active time will be determined by a combination of the value in BW Select and the number of magnetic sensing channels enabled. For more information on LPDCM configuration, refer to the Low-Power Management Application Note for the ALS31300.

Bandwidth Selection

BW Select, address 0x02, bits 23:21, controls filtering modes on the ALS31300 for the X, Y, and Z magnetic channels. This setting will impact the resolution of sampled magnetic data, the device's update rate, and the overall bandwidth.

A lower value for BW Select offers increased measurement resolution with a longer measurement duration. A higher value for BW Select offers faster measurement time at the expense of reduced resolution. This setting is valuable for controlling active time during low-power duty cycle mode or increasing response time. Typical noise versus BW Select are listed in Table 11.

Table 11: Bandwidth Select, Filtering Modes, and Input Referred Noise

BW Select Value	FIR Enabled	Z Channel Noise (G)	X/Y Channel Noise (G)
0	1	1.5	4
1	1	2	5
2	1	2.2	7
3	–	–	–
4	0	2	6
5	0	2.5	8
6	0	3.5	10
7	–	–	–

Update rate (typical) versus BW Select and active channels is shown in Table 12. While the ALS31300 does update at high bandwidths internally, throughput may be limited by the I²C bus clocking frequency at the application level. This concept is explained in the "Calculation Timing" section of the 3D Linear and 2D Angle Sensing application note.

Table 12: Bandwidth Select and Update Rate

BW Select Value	1 Channel Update Rate		2 Channel Update Rate		3 Channel Update Rate		–3 dB Bandwidth
	µs	kHz	µs	kHz	µs	kHz	kHz
0	160	6	330	3	495	2	3.5
1	80	13	170	6	255	4	7
2	40	25	90	11	135	7	14
3	–	–	–	–	–	–	–
4	64	16	138	7	207	5	10
5	32	31	74	14	111	9	20
6	16	63	42	24	63	16	40
7	–	–	–	–	–	–	–

Magnetic sensing channels on the ALS31300 may be enabled independently with *channel x en*, *channel y en*, and *channel z en* bits, listed in Table 13.

Table 13: Channel Enable Control

Address	Bits	Value	Description
0x02	8	1	Enables Z sensing Channel
	7	1	Enables Y Sensing Channel
	6	1	Enables X Sensing Channel

Hall Modes

The ALS31300 offers two schemes to retrieve magnetic data from the magnetic sensing elements. These settings are controlled via *Hall Mode*, address 0x02, bits 20:19, described in Table 14.

Table 14: Hall Modes

Value	Mode	Description
0	Single Ended	Reports magnetic data from X_i, Y_i, and Z_i sensing elements.
1	Reserved	Reserved
2	Common Mode	Reports magnetic data from X_{OE} + X_{OW}, Y_{ON} +Y_{OS}, and Z_i sensing elements.

It is not advised to switch a factory-trimmed, single-ended device (0) into common mode (2) or vice versa. Doing so may result in sensor performance that is outside of the datasheet specifications.

Allegro MicroSystems
955 Perimeter Road
Manchester, NH 03103-3353 U.S.A.
www.allegromicro.com

Downloaded from Arrow.com.

SINGLE-ENDED HALL MODE

Magnetic data in registers 0x28 and 0x29 will be proportional to the magnetic field seen by the inner sensing elements X_i, Y_i, and Z_i.

COMMON HALL MODE

Magnetic data in registers 0x28 and 0x29 will be proportional to the sum of the fields as seen by the outer sensing elements of the X and Y axes.

Concatenated X axis data {x_axis_MSB:x_axis_LSB} will be the result of $X_{O(EAST)} + X_{O(WEST)}$ sensing elements, while concatenated Y axis data {y_axis_MSB:y_axis_LSB} will be the result of $Y_{O(NORTH)} + Y_{O(SOUTH)}$ sensing elements.

Z axis data will be the same as in single-ended mode.

Interrupt

The Interrupt feature on the ALS31300 integrates detection and reporting of large changes in applied magnetic field. An interrupt event is initiated when the applied magnetic field forces the ADC output to a value greater than or equal to the user-programmed threshold. Interrupt detection may be independently enabled or disabled for each of the three axes.

Interrupt Reporting

The ALS31300 will report the presence of an interrupt event by asserting the $\overline{\text{INT}}$ pin and the $\overline{\text{INT}}$ bit in register 0x28 will be set. Interrupt reporting may be latched or unlatched depending on the value of *$\overline{\text{INT}}$ Latch Enable*, address 0x02, bit 5.

In a latched state, the $\overline{\text{INT}}$ pin will assert when an event is detected, and the $\overline{\text{INT}}$ bit will be set. Should the event subside, the $\overline{\text{INT}}$ pin and $\overline{\text{INT}}$ bit will remain set.

In an unlatched state, the $\overline{\text{INT}}$ pin will assert when an event is detected, and the $\overline{\text{INT}}$ bit will be set. Should the event subside, the ALS31300 will reset the $\overline{\text{INT}}$ pin and the $\overline{\text{INT}}$ bit will be cleared.

The ALS31300 may also report an interrupt event in EEPROM. This is feature enabled by setting *$\overline{\text{INT}}$ EEPROM Enable*, address 0x03, bit 21. If an interrupt event is detected, the device will write to *$\overline{\text{INT}}$ EEPROM Status*, address 0x03, bit 22.

Interrupt Modes

The ALS31300 includes two different interrupt modes, where the user may select a threshold value or a maximum change in field to compare. This setting is controlled via *$\overline{\text{INT}}$ Mode*, address 0x03, bit 23, explained in Table 15.

Table 15: $\overline{\text{INT}}$ Modes

$\overline{\text{INT}}$ Mode Value	Mode	Description
0	Threshold Mode	An interrupt event occurs when the magnetic ADC Output data ≥ threshold.
1	Delta Mode	Recent magnetic data is compared to stored value when entering LPDCM. An interrupt event occurs when the change in magnetic ADC Output data ≥ user-programmed delta value.

THRESHOLD MODE

In Threshold Interrupt Mode, the most recent magnetic sample data is compared to the user-selected threshold for each channel. If the magnetic ADC value is greater than or equal to this threshold, an interrupt event will occur.

DELTA MODE

Delta Interrupt Mode is used in combination with Low-Power Duty Cycle Mode, where the ALS31300 toggles between an Active and a Sleep state. In Delta Interrupt Mode, the ALS31300 will remember its last magnetic data sample when entering LPDCM.

New magnetic data is compared to the original sample every time the ALS31300 toggles into the active state. If the delta (change) in magnetic data is larger than the user-selected delta, an interrupt event will occur.

User-selectable values for threshold and delta share the registers *Z $\overline{\text{INT}}$ Threshold*, *Y $\overline{\text{INT}}$ Threshold*, and *X $\overline{\text{INT}}$ Threshold*, address 0x03, bits 17:0.

In Threshold Mode, the value in these registers will be considered a threshold, while in Delta Mode, the value in these registers will be considered a delta. The ALS31300 may interpret these values as signed or unsigned based on the *Signed $\overline{\text{INT}}$ Enable* bit.

Allegro MicroSystems
955 Perimeter Road
Manchester, NH 03103-3353 U.S.A.
www.allegromicro.com

Downloaded from Arrow.com.

SIGNED INTERRUPT THRESHOLD

By default, the value for Signed $\overline{\text{INT}}$ Enable is set to 0, and the user-programmed value for threshold is unsigned. This will trigger an interrupt event when applying a positive or negative magnetic field, causing the absolute value of the magnetic data to meet or exceed the user-selected threshold.

If Signed $\overline{\text{INT}}$ Enable is set to 1, the value for threshold becomes signed. This may be used to trigger interrupts on only positive or only negative magnetic fields that cause the value of the magnetic data to meet or exceed the user-programmed threshold.

Interrupt threshold for each channel can be programmed independently using registers Z $\overline{\text{INT}}$ Threshold, Y $\overline{\text{INT}}$ Threshold, and X $\overline{\text{INT}}$ Threshold, address 0x03, bits 17:0. The following examples set an interrupt threshold for the X axis, but the technique also applies to Y and Z axes.

When Signed $\overline{\text{INT}}$ Enable = 0, the interrupt threshold will be determined by the equation:

$$threshold = (\overline{INT}\ Threshold + 1) \times 2^5 - 1$$

When Signed $\overline{\text{INT}}$ Enable = 1, the interrupt threshold will be determined by the equation:

$$if\ X\ \overline{INT}\ Threshold \geq 0$$

$$threshold = (\overline{INT}\ Threshold + 1) \times 2^6 - 1$$

$$if\ X\ \overline{INT}\ Threshold < 0$$

$$threshold = (\overline{INT}\ Threshold + 1) \times 2^6$$

Allegro MicroSystems
955 Perimeter Road
Manchester, NH 03103-3353 U.S.A.
www.allegromicro.com

Downloaded from Arrow.com.

I²C Interface

I²C is a synchronous, 2-wire serial communication protocol which provides a full-duplex interface between two or more devices. The bus specifics two logic signals:

1. Serial Clock Line (SCL) output by the Master.
2. Serial Data Line (SDA) output by either the Master or the Slave.

The ALS31300 may only operate as a Slave device. Therefore, it cannot initiate any transactions on the I²C bus.

Data Transmission and Timing Considerations

I²C communication is composed of several steps outlined in the following sequence.

1. Start Condition: Defined by a negative edge of the SDA line, initiated by the Master, while SCL is high.
2. Address Cycle: 7-bit Slave address, plus 1 bit to indicate write (0) or read (1), followed by an Acknowledge bit.
3. Data Cycles: Reading or writing 8 bits of data, followed by an Acknowledge bit. This cycle can be repeated for multiple bytes of data transfer. The first data byte on a write could be the register address. See the following sections for further information.
4. Stop Condition: Defined by a positive edge on the SDA line, while SCL is high.

Except to indicate Start or Stop conditions, SDA must remain stable while the clock signal is high. SDA may only change states while SCL is low. It is acceptable for a Start or Stop condition to occur at any time during the data transfer. The ALS31300 will always respond to a Read or Write request by resetting the data transfer sequence.

The state of the Read/$\overline{\text{Write}}$ bit is set to 0 to indicate a write cycle and set to 1 to indicate a read cycle.

The Master monitors for an Acknowledge bit to confirm the Slave device (ALS31300) is responding to the address byte. When the ALS31300 decodes the 7-bit Slave address as valid, it responds by pulling SDA low during the ninth clock cycle.

When a data write is requested by the Master, the ALS31300 pulls SDA low during the clock cycle following the data byte to indicate that the data has been successfully received.

After sending either an address byte or a data byte, the Master must release the SDA line before the ninth clock cycle, allowing the handshake process to occur.

I²C Write Cycle Overview

The write cycle to access registers on the ALS31300 are outlined in the sequence below.

1. Master initiates Start Condition
2. Master sends 7-bit Slave address and the write bit (0)
3. Master waits for ACK from ALS31300
4. Master sends 8-bit register address
5. Master waits for ACK from ALS31300
6. Master sends 31:24 bits of data
7. Master waits for ACK from ALS31300
8. Master sends 23:16 bits of data
9. Master waits for ACK from ALS31300
10. Master sends 15:8 bits of data
11. Master waits for ACK from ALS31300
12. Master sends 7:0 bits of data
13. Master waits for ACK from ALS31300
14. Master initiates Stop Condition

The I²C write sequence is further illustrated in the timing diagrams below in Figure 5.

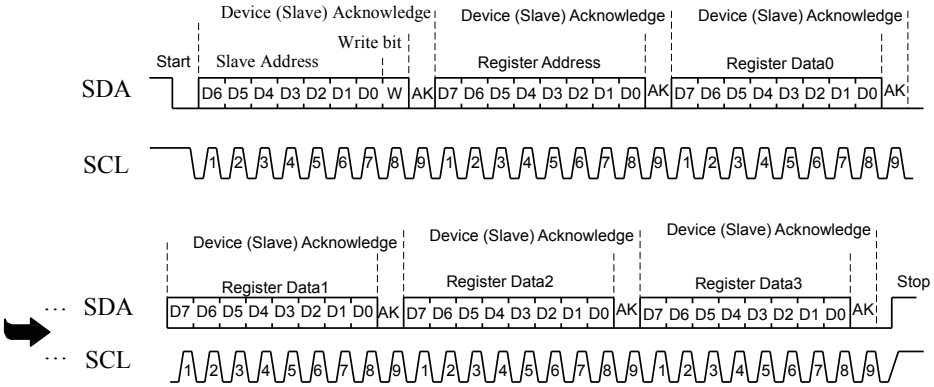

Figure 5: I²C Write Timing Diagram

Allegro MicroSystems
955 Perimeter Road
Manchester, NH 03103-3353 U.S.A.
www.allegromicro.com

Downloaded from Arrow.com.

Customer Write Access

An access code must be sent to the device prior to writing any of the volatile registers or EEPROM in the ALS31300. If customer access mode is not enabled, then no writes to the device are allowed. The only exception to this rule is the sleep register, which can be written regardless of the access mode. Furthermore, any register or EEPROM location can be read at any time regardless of the access mode.

To enter customer access mode, an access command must be sent via the I²C interface. The command consists of a serial write operation with the address and data values shown in Table 16. Once the customer access mode is entered, it is not possible to change access modes without power-cycling the device. After power up, there is no time limit to when the access code may be entered.

Table 16: Customer Access Code

Access Mode	Address	Data
Customer Access	0x35	0x2C413534

Read Cycle Overview

The read cycle to access registers on ALS31300 is outlined in the sequence below.

1. Master initiates Start Condition
2. Master sends 7-bit Slave address and the write bit (0)
3. Master waits for ACK from ALS31300
4. Master sends 8-bit register address
5. Master waits for ACK from ALS31300
6. Initiate a Start Condition; this time it is referred to as a Restart Condition
7. Master sends 7-bit Slave address and the read bit (1)
8. Master waits for ACK from ALS31300
9. Master receives 31:24 bits of data
10. Master sends ACK to ALS31300
11. Master receives 23:16 bits of data
12. Master sends ACK to ALS31300
13. Master receives 15:8 bits of data
14. Master sends ACK to ALS31300
15. Master receives 7:0 bits of data
16. Master sends NACK to ALS31300
17. Master initiates Stop Condition

The I²C read sequence is further illustrated in the timing diagrams in Figure 6.

The timing diagram in Figure 6 shows the entire contents (bits 31:0) of a single register location being transmitted. Optionally, the I²C Master may choose to replace the NACK with an ACK instead, which allows the read sequence to continue. This case will result in the transfer of contents (bits 31:24) from the following register, address + 1. The master can then continue acknowledging, issue the not-acknowledge (NACK), or stop after any byte to stop receiving data.

Note that only the initial register address is required for reads, allowing for faster data retrieval. However, this restricts data retrieval to sequential registers when using a single read command. When the Master provides a non-acknowledge bit and stop bit, the ALS31300 stops sending data. If nonsequential registers are to be read, separate read commands must be sent.

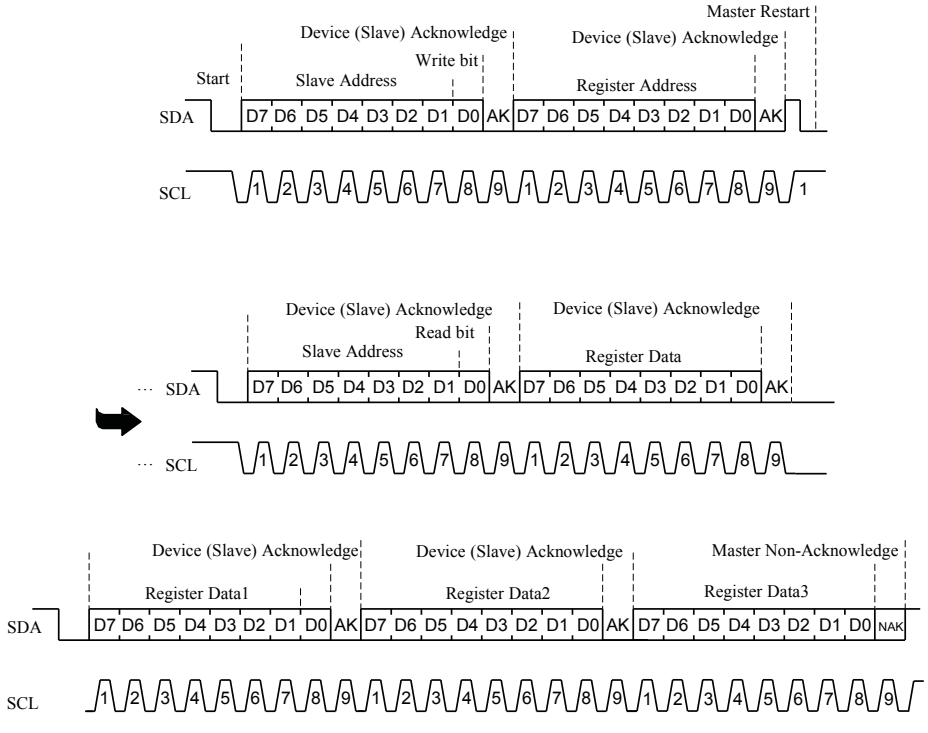

Figure 6: I²C Read Timing Diagram

Allegro MicroSystems
955 Perimeter Road
Manchester, NH 03103-3353 U.S.A.
www.allegromicro.com

Downloaded from Arrow.com.

I²C CRC Byte

The ALS31300 CRC feature is enabled by setting the *I²C CRC Enable* bit, Address 0x02, bit 18. When enabled, the ALS31300 read transaction returns one extra byte corresponding the CRC calculation of that read. The bytes of the I²C read sequence used for CRC calculation are:

1. 8-Bit Register Address
2. The 7-Bit Slave Address + Read bit (1'b1)
3. The four Data Bytes (32 Bits, MSB first)

The code is 8 bits in length and will be generated using the CRC8-ATM (0x83) polynomial:

$$p(x) = x^8 + x^2 + x + 1$$

Table 17: Example CRC Calculation Result

Slave Address	Register Address	Data	CRC
0xC3	0x28	0x282A2C80	0xEC
0xC3	0x28	0x282A2C00	0x65

I²C Readback Modes

The ALS31300 supports three different readback modes over the I²C interface, including single, fast loop, and full loop modes. These modes simplify the process of repeatedly polling the ALS31300 for magnetic X, Y, Z, and Temperature data.

Readback modes on the ALS31300 are described in Table 18. The desired readback mode may be entered by setting the appropriate bits for *I²C Loop Mode*, address 0x27, bits 3:2.

Table 18: ALS31300 Looping Read Modes

Code (Binary)	Mode	Description
'00'	Single	No Looping. Similar to Default I²C.
'01'	Fast Loop	X, Y, Z, and Temperature fields are looped. 8 MSBs for X, Y, and Z, 6 MSBs for Temperature are looped.
'10'	Full Loop	X, Y, Z, and Temperature fields are looped. Full 12-bit resolution fields are looped.
'11'	Single	Same as code 0.

SINGLE MODE

A single write or read command to any register—this is the default mode and is best suited for setting fields and reading static registers. If desired, this mode can be used to read X, Y, Z, and Temperature data in a typical serial fashion, but fast or full loop read modes are recommended for high-speed data retrieval.

FAST LOOP MODE

Fast Loop Mode offers continuous reading of X, Y, Z, and temperature values, but is limited to the upper 8 bits of X, Y, and Z, and upper 6 bits of Temperature. This mode is intended to be a time efficient way of reading data from the IC at the expense of truncating resolution. The flow chart in Figure 7 depicts Fast Loop Mode.

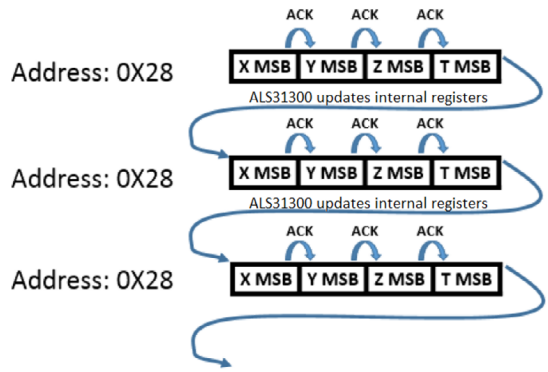

Figure 7: Fast Loop Mode

FULL LOOP MODE

Full Loop Mode provides continuous reads of X, Y, Z, and Temperature data with full 12-bit resolution. This is the recommended mode for applications that require a higher data rate for X, Y, Z, and Temperature with full resolution. The flow chart in Figure 8 depicts Full Loop Mode.

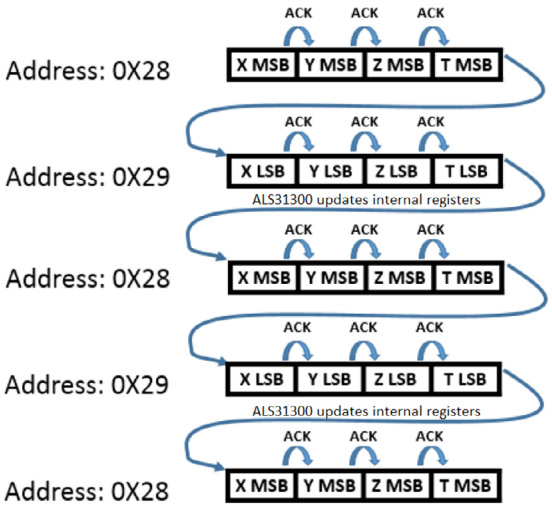

Figure 8: Full Loop Mode

Allegro MicroSystems
955 Perimeter Road
Manchester, NH 03103-3353 U.S.A.
www.allegromicro.com

Downloaded from Arrow.com.

I²C Addressing

Table 19 outlines the different addresses available to the ALS31300. In the special case where AD0 and AD1 are both tied to VCC, the device will respond to the slave address stored in register 0x02 (bits 10:16). From the factory, this is set to 7b000000, with the bit following the address indicating a read or write per the I²C specification. Note: Different values for the three MSBs of the address bits (A6, A5, and A4) are available for factory programming if a conflict with other units occurs in the application design.

Table 19: I²C Slave Address Decoding

Voltage on AD1, V_{A1} (× V_{CC})	Voltage on AD0, V_{A0} (× V_{CC})	4-Bit Code from ADR1 and ADR0 Voltages				Slave Address Bits							Slave Address
		E3	E2	E1	E0	A6	A5	A4	A3	A2	A1	A0	
0	0	0	0	0	0	1	1	0	0	0	0	0	96
	0.33	0	0	0	1	1	1	0	0	0	0	1	97
	0.67	0	0	1	0	1	1	0	0	0	1	0	98
	1	0	0	1	1	1	1	0	0	0	1	1	99
0.33	0	0	1	0	0	1	1	0	0	1	0	0	100
	0.33	0	1	0	1	1	1	0	0	1	0	1	101
	0.67	0	1	1	0	1	1	0	0	1	1	0	102
	1	0	1	1	1	1	1	0	0	1	1	1	103
0.67	0	1	0	0	0	1	1	0	1	0	0	0	104
	0.33	1	0	0	1	1	1	0	1	0	0	1	105
	0.67	1	0	1	0	1	1	0	1	0	1	0	106
	1	1	0	1	1	1	1	0	1	0	1	1	107
1	0	1	1	0	0	1	1	0	1	1	0	0	108
	0.33	1	1	0	1	1	1	0	1	1	0	1	109
	0.67	1	1	1	0	1	1	0	1	1	1	0	110
	1	1	1	1	1	x	x	x	x	x	x	x	Set to 0 at the factory

Allegro MicroSystems
955 Perimeter Road
Manchester, NH 03103-3353 U.S.A.
www.allegromicro.com

Downloaded from Arrow.com.

SENSING ELEMENT LOCATIONS AND NORMALS

Dimensions in Millimeters – Not to Scale

The locations of the sensing elements are indicated in Figure 9.

The normal faces of each element are indicated with an arrow.

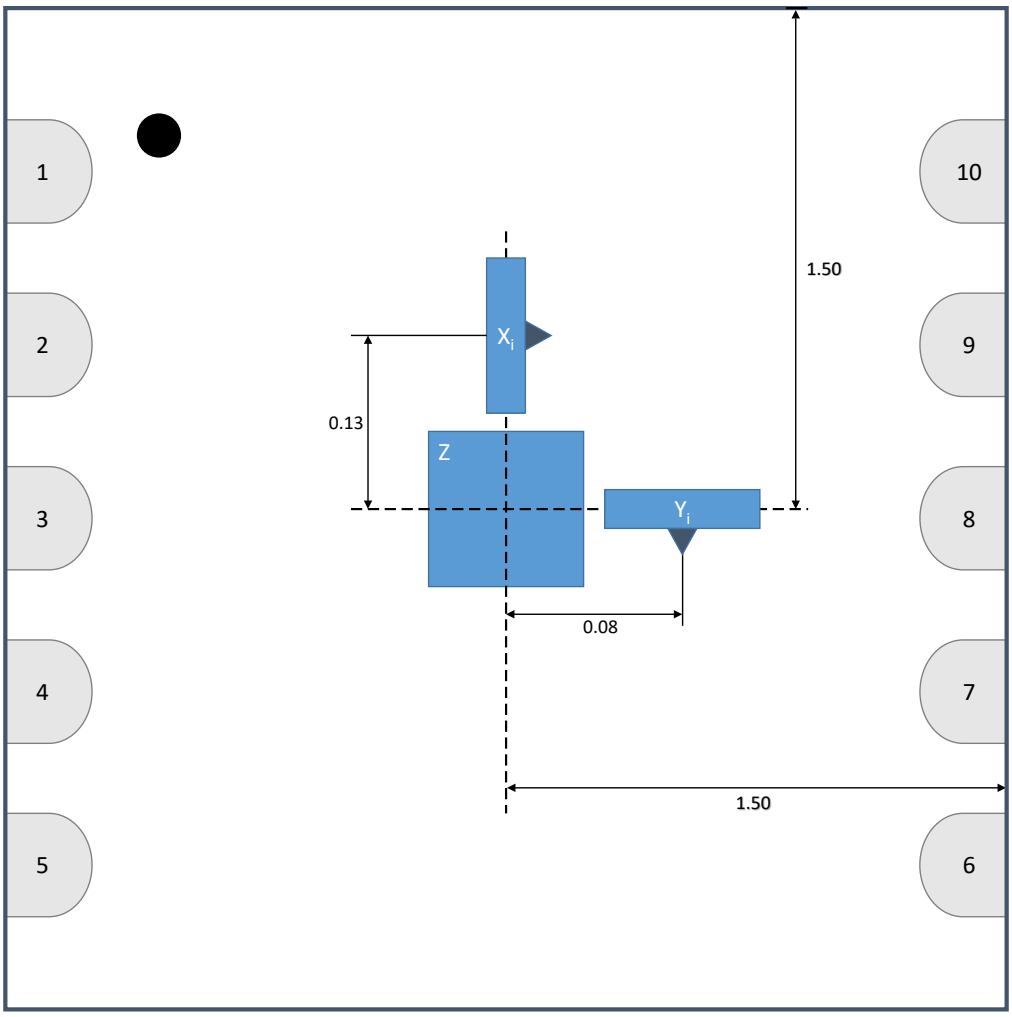

Figure 9: ALS31300 Sensing Element Locations and Normals

Allegro MicroSystems
955 Perimeter Road
Manchester, NH 03103-3353 U.S.A.
www.allegromicro.com

Downloaded from Arrow.com.

PACKAGE OUTLINE DRAWING

For Reference Only – Not for Tooling Use

(Reference DWG-0000372)
Dimensions in millimeters – NOT TO SCALE
Exact case and lead configuration at supplier discretion within limits shown

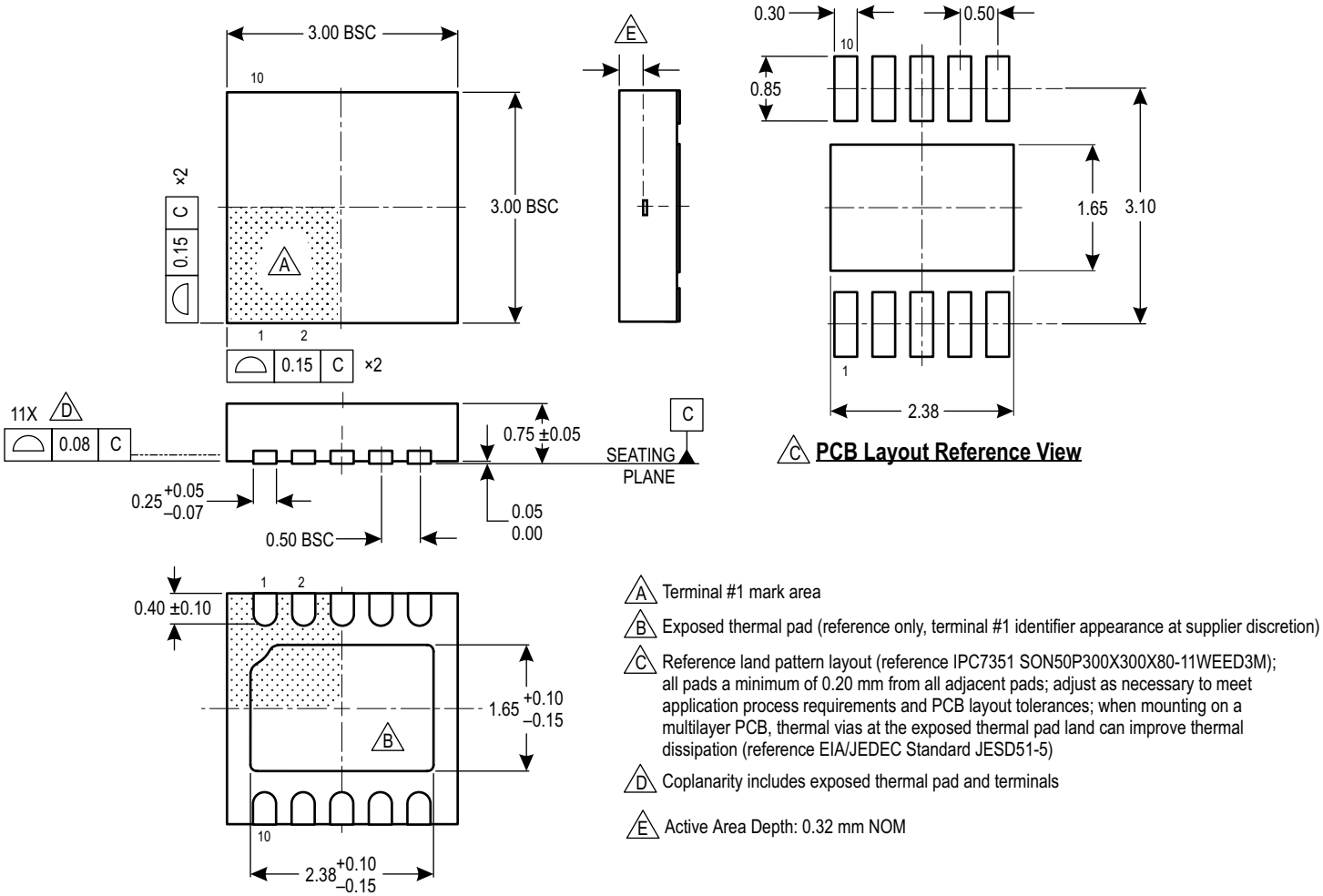

Figure 10: DFN10 (EJ) Package Drawing

Allegro MicroSystems
955 Perimeter Road
Manchester, NH 03103-3353 U.S.A.
www.allegromicro.com

Downloaded from Arrow.com.

Revision History

Number	Date	Description
–	June 21, 2017	Initial release
1	July 12, 2017	Updated Zero-Field Offset Code (pages 7-10)
2	January 26, 2018	Removed inapplicable $E_{MATCH(XYZ)}$ characteristic from ALS31300EEJASR-JOY performance characteristics table (page 10)
3	April 26, 2018	Corrected address in Table 16 (page 20)
4	May 2, 2018	Editorial updates (page 1, 2, 12, 14, and 17)
5	August 22, 2018	Added Active Area Depth to Package Outline Drawing (page 24).
6	August 31, 2018	Updated EEPROM 0x02 (20:19, page 12), Volatile 0x29 (7:6, page 14), Hall Modes section (page 16); removed Differential Hall Mode and Alternating Hall Mode sections (page 17).
7	March 12, 2019	Updated Temperature Sensor Output (page 15).
8	October 4, 2019	Updated RMS Noise Channel values (page 7-10), EEPROM 0x02 (16:10, page 12), and I²C Addressing description (page 22).
9	June 12, 2020	Updated Table 19
10	May 14, 2021	Added 3DMAG™ branding (page 1)
11	May 18, 2021	Edited “3D” wording in titles (all pages) and added full 3DMAG™ in description (page 1)
12	October 20, 2021	Removed extraneous Hall elements in diagrams (page 1 and 23); updated package drawing (page 24)
13	October 27, 2023	Corrected package drawing (page 24)
14	June 17, 2026	Corrected X and Y dimensions in Figure 9 (page 23)

Copyright 2026, Allegro MicroSystems.
Allegro MicroSystems reserves the right to make, from time to time, such departures from the detail specifications as may be required to permit improvements in the performance, reliability, or manufacturability of its products. Before placing an order, the user is cautioned to verify that the information being relied upon is current.
Allegro’s products are not to be used in any devices or systems, including but not limited to life support devices or systems, in which a failure of Allegro’s product can reasonably be expected to cause bodily harm.
The information included herein is believed to be accurate and reliable. However, Allegro MicroSystems assumes no responsibility for its use; nor for any infringement of patents or other rights of third parties which may result from its use.
Copies of this document are considered uncontrolled documents.

For the latest version of this document, visit our website:

www.allegromicro.com

Allegro MicroSystems
955 Perimeter Road
Manchester, NH 03103-3353 U.S.A.
www.allegromicro.com

Downloaded from Arrow.com.