Single-chip Type with Built-in FET Switching Regulator Series

Step-up and inverted Output Power Supply for TFT-LCD Displays

BD83854MUV

General Description

BD83854MUV is a step-up switching regulator and charge pump inverter for small TFT-LCD Displays. It has a wide input voltage range of 2.5V to 4.5V that is suitable for portable applications. In addition, its small package design is ideal for miniaturizing the power supply.

Features

- Wide input voltage range of 2.5V to 4.5V
- High frequency operation
- Output Discharge Independent ON/OFF signal(STBYP, STBYN)
- Circuit protection
  - Over Current Protection (OCP)
  - Short Current Protection (SCP)
  - Under Voltage Lock Out (UVLO)
  - Thermal Shutdown (TSD)

Applications

- TFT LCD Smart phones
- TFT LCD Tablets

Key Specifications

Input Voltage Range	2.5V to 4.5V
Output Boost Voltage	5.4V(typ)
Output Inverted Voltage	-5.4V(typ)
Maximum Current	50mA(max)
Operating Frequency	1.0MHz(typ)
Efficiency	>85 %(typ)
Output Voltage Accuracy	±2 %(typ)
Standby Current	1µA(max)

Package W(Typ) x D(Typ) x H(Max)

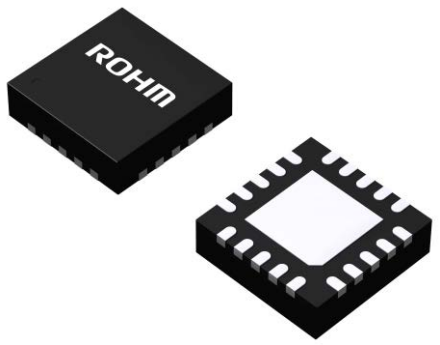

VQFN20PV3535
3.50mm x 3.50mm x 1.00mm

Typical Application Circuit

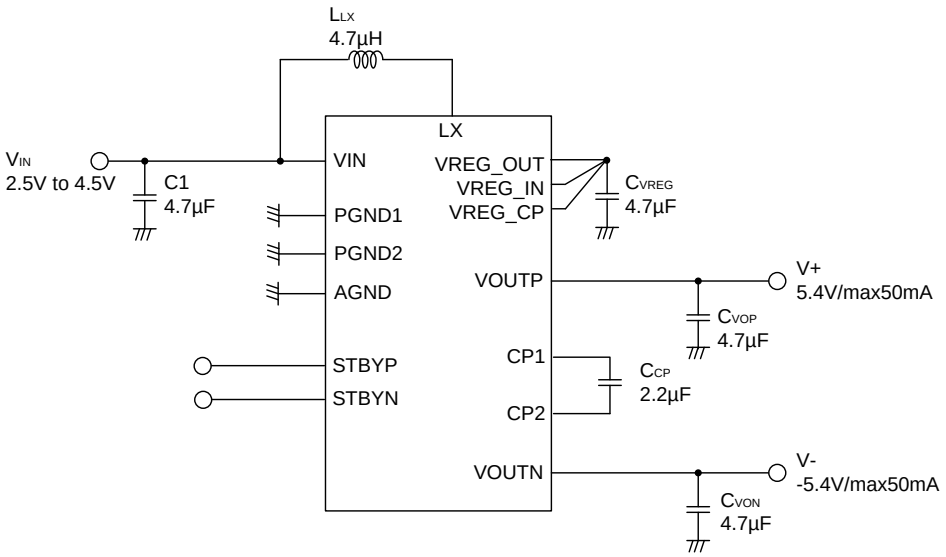

Figure 1. Application Circuit

○Product structure : Silicon monolithic integrated circuit ○This product has no designed protection against radioactive rays

© 2014 ROHM Co., Ltd. All rights reserved.

Downloaded from Arrow.com.

Contents

General Description 1
Features 1
Applications 1
Key Specifications 1
Package W(Typ) x D(Typ) x H(Max) 1
Typical Application Circuit 1
Pin Configuration 3
Pin Description 3
Block Diagram 4
Absolute Maximum Ratings (Ta = 25°C) 4
Recommended Operating Conditions 4
Electrical Characteristics (Unless otherwise specified V_{IN}=3.7V Ta=25°C) 5
Typical Performance Curves 6
Application Information 11
  Description of Protection Circuits 11
  Application Example 13
  Selection of External Components 13
Power Dissipation 14
I/O Equivalence Circuit 15
Operational Notes 16
Ordering Information 18
Marking Diagrams 18
Physical Dimension, Tape and Reel Information 19
Revision History 20

© 2014 ROHM Co., Ltd. All rights reserved.

Downloaded from Arrow.com.

Pin Configuration

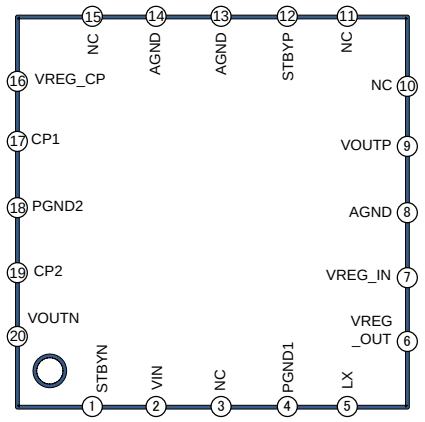

(Top view)

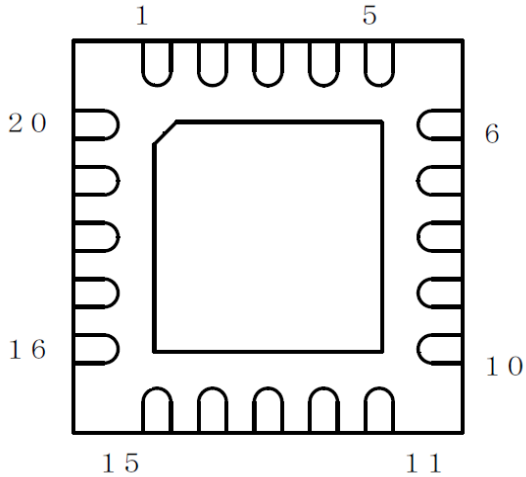

(Bottom view)

Figure 2. Pin assignment

Pin Description

Pin No.	Pin Name	Function
1	STBYN	Charge pump inverter (V-) enable
2	VIN	Input voltage supply
3	NC	No Connection
4	PGND1	Boost Power ground
5	LX	Boost converter switch
6	VREG_OUT	Boost converter output
7	VREG_IN	Internal voltage supply
8	AGND	Analog ground
9	VOUTP	LDO output (V+)
10	NC	No Connection
11	NC	No Connection
12	STBYP	LDO enable (V+)
13	AGND	Analog ground
14	AGND	Analog ground
15	NC	No Connection
16	VREG_CP	Internal voltage supply
17	CP1	Negative charge pump flying capacitor
18	PGND2	Charge pump Power ground
19	CP2	Negative charge pump flying capacitor
20	VOUTN	Charge pump inverter (V-) output
-	Back side PAD	Heat radiation PAD. This can be set to open or shorted to GND. (if open, heat radiation capacity lessens)

© 2014 ROHM Co., Ltd. All rights reserved.

Downloaded from Arrow.com.

Block Diagram

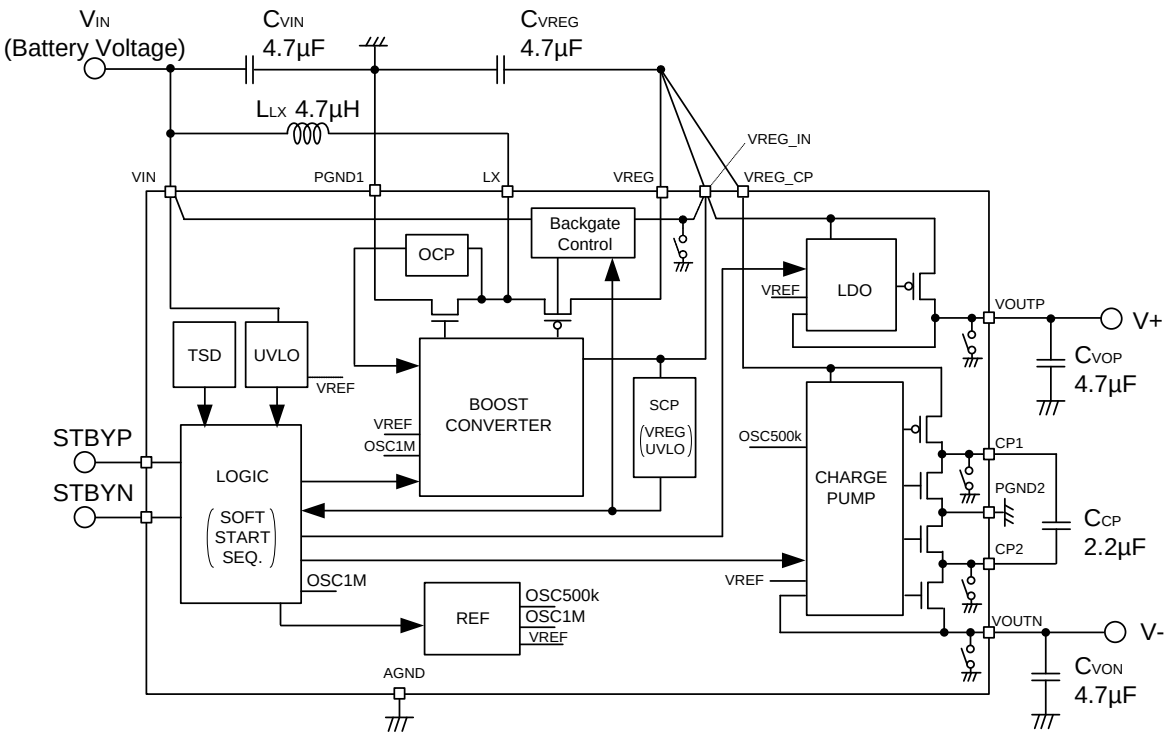

Figure 3. Block diagram

Absolute Maximum Ratings (Ta = 25°C)

Parameter	Symbol	Rating	Unit
Maximum power supply voltage	VIN	-0.3 to 7.0	V
	STBYP,STBYN	-0.3 to 7.0	V
Voltage range	LX	-0.3 to 7.0	V
	VOUTP	-0.3 to 7.0	V
Power dissipation (no mount)	Pd1	0.30	W
Power dissipation (note1)	Pd2	0.57	W
Storage temperature range	Tstg	-55 to +150	°C
Junction temperature	Tjmax	+150	°C

(Note 1) Derate by 4.55mW/°C when operating above Ta=25°C (when mounted in ROHM's standard board).

Caution: Operating the IC over the absolute maximum ratings may damage the IC. The damage can either be a short circuit between pins or an open circuit between pins and the internal circuitry. Therefore, it is important to consider circuit protection measures, such as adding a fuse, in case the IC is operated over the absolute maximum ratings.

Recommended Operating Conditions

Parameter	Symbol	Standard value			Units
		MIN	TYP	MAX	
Power supply voltage	VDD	2.5	-	4.5	V
Operating temperature range	Topr	-40	25	85	°C

© 2014 ROHM Co., Ltd. All rights reserved.

Downloaded from Arrow.com.

Electrical Characteristics (Unless otherwise specified V_{IN}=3.7V Ta=25°C)

Parameter		Symbol	Standard value			Unit	Conditions
			MIN	TYP	MAX		
【Power Supply】							
Input Voltage Range		V_{IN}	2.5	-	4.5	V	
UVLO Detect Voltage		V_{UVLO1}	2.20	2.26	-	V	
UVLO UnDetect Voltage		V_{UVLO2}	-	2.39	2.50	V	
UVLO Hysteresis Voltage		V_{HYS}	-	0.13	-	V	
【Soft Start Sequence】							
VOUTP Soft Start Time		t_{SSVP}	0.4	0.5	1.0	ms	C_{VOP}=4.7µF+4.7µF
VOUTN Soft Start Time		t_{SSVN}	3.7	4.1	4.6	ms	C_{VON}=4.7µF+6.8µF
【Boost Converter】							
LX Switching Frequency		f_{SWLX}	0.90	1.00	1.10	MHz	
LX OCP Current		OCPLXL	0.6	-	-	A	
VREG Output Voltage		V_{VREG}	5.50	5.65	5.80	V	
VREGUVLO Voltage 1		V_{RUVLO1}	1.9	2.1	2.3	V	Among Soft Start Operation
VREGUVLO Voltage 2		V_{RUVLO2}	4.35	4.55	4.75	V	
【Output VOUTP】							
Output Voltage		V_{OUTP}	5.292	5.400	5.508	V	
Output Voltage Accuracy		V_{OUTPAQ}	-2	-	2	%	
Maximum Output Current		I_{OUTP}	-	-	50	mA	
Line Regulation		V_{OPLINE}	-	0.1	-	%/V	Iout=10mA
Load Regulation		V_{OPLOAD}	-	10	-	mV	Iout=50mA
Discharge Resistor		R_{OPDIS}	20	40	80	Ω	VREG=5.25V
【Output VOUTN】							
CP Switching Frequency		f_{SWCP}	450	500	550	kHz	
Output Voltage		V_{OUTN}	-5.508	-5.400	-5.292	V	
Output Voltage Accuracy		V_{OUTNAQ}	-2	-	2	%	
Maximum Output Current		I_{OUTN}	-	-	50	mA	
Line Regulation		V_{ONLINE}	-	0.1	-	%/V	Iout=10mA
Load Regulation		V_{ONLOAD}	-	10	-	mV	Iout=50mA
Discharge Resistor		R_{ONDIS}	10	20	40	Ω	VREG=5.25V
【STBYP,STBYN】							
STBY pin Control voltage	Active	V_{STBH}	1.5	-	VIN	V	
	Non-active	V_{STBL}	-0.3	-	0.3	V	
STBY pin pull down resistance		R_{STB1}	500	800	1100	kΩ	
【Circuit current】							
Standby current		I_{STB}	-	0	1	µA	STBYP=STBYN=L
Circuit current of operation VIN		I_{DD}	1.3	2.5	5.0	mA	STBYP=STBYN=H VOUTP IL=0,VOUTN IL=0

© 2014 ROHM Co., Ltd. All rights reserved.

Downloaded from Arrow.com.

Typical Performance Curves

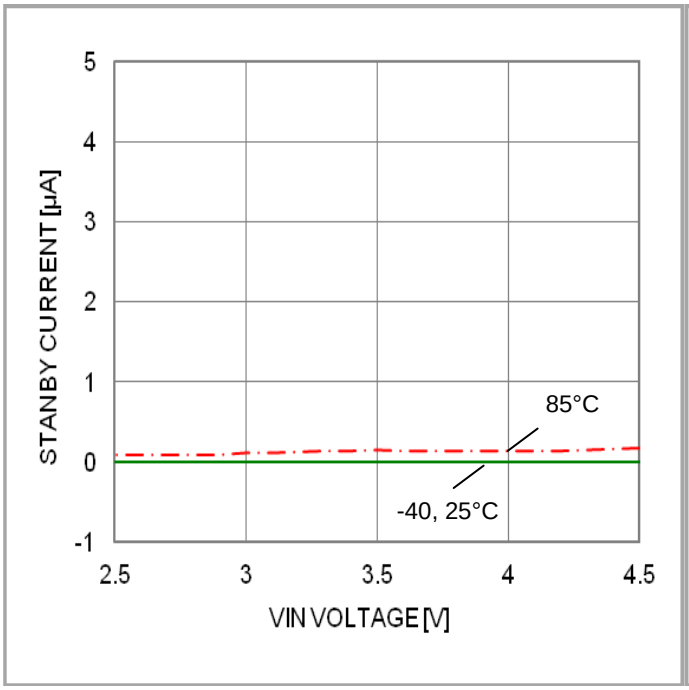

Figure 4. Standby Current vs VIN Voltage
(Ta –40, 25, 85°C)

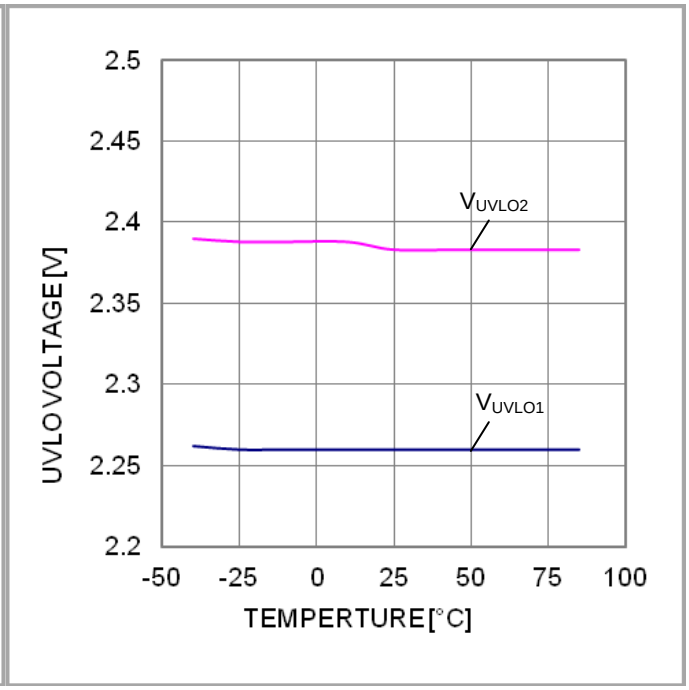

Figure 5. VIN UVLO Voltage vs Temperature

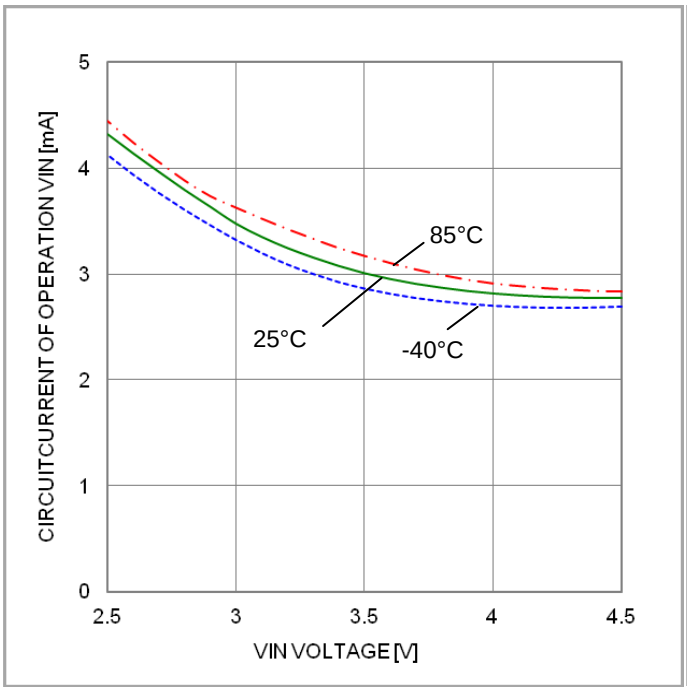

Figure 6. Circuit Current of Operation VIN vs VIN Voltage
(Ta –40, 25, 85°C)

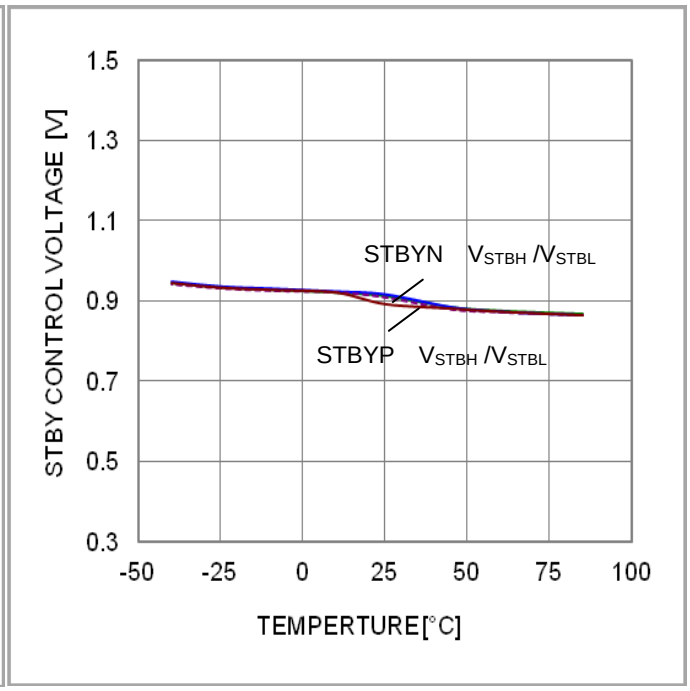

Figure 7. STBY Control Voltage vs Temperature
(V_{IN} =3.7V)

© 2014 ROHM Co., Ltd. All rights reserved.

Downloaded from Arrow.com.

Typical Performance Curves – continued

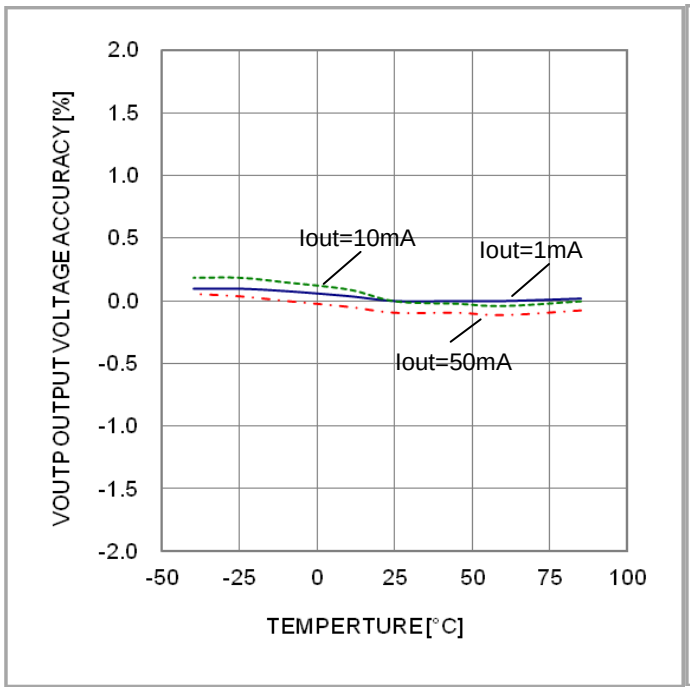

Figure 8. VOUTP Output Voltage vs Temperature

(V_{IN} =3.7V, Iout=1m, 10m, 50mA)

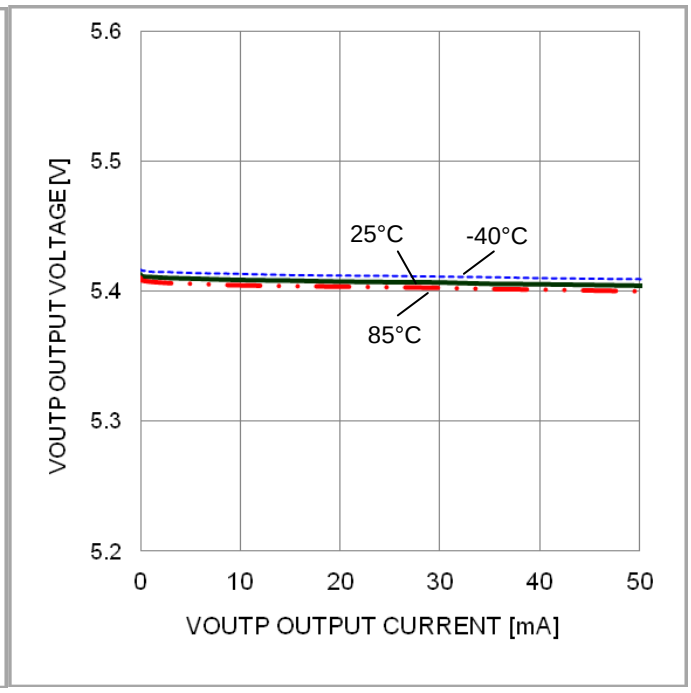

Figure 9. VOUTP Load Regulation

(Ta –40°C, 25°C, 85°C)

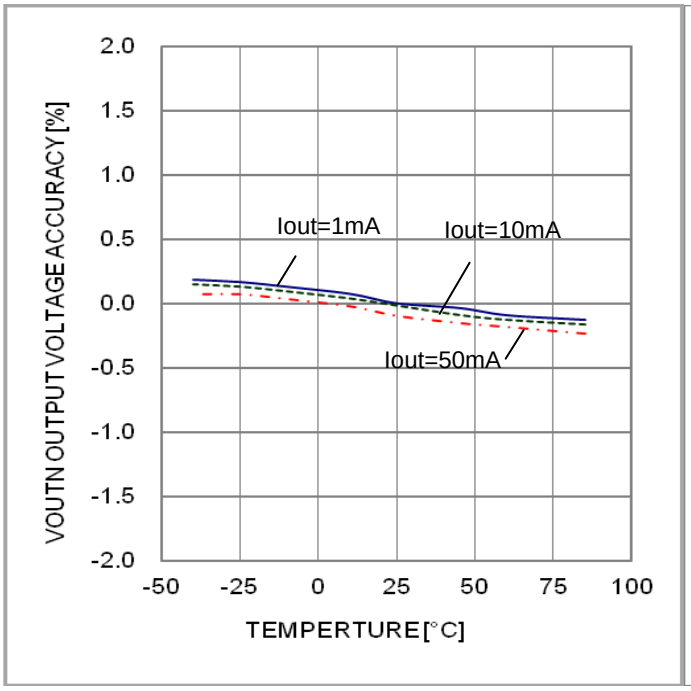

Figure 10. VOUTN Output Voltage vs Temperature

(V_{IN} =3.7V, Iout=1m, 10m, 50mA)

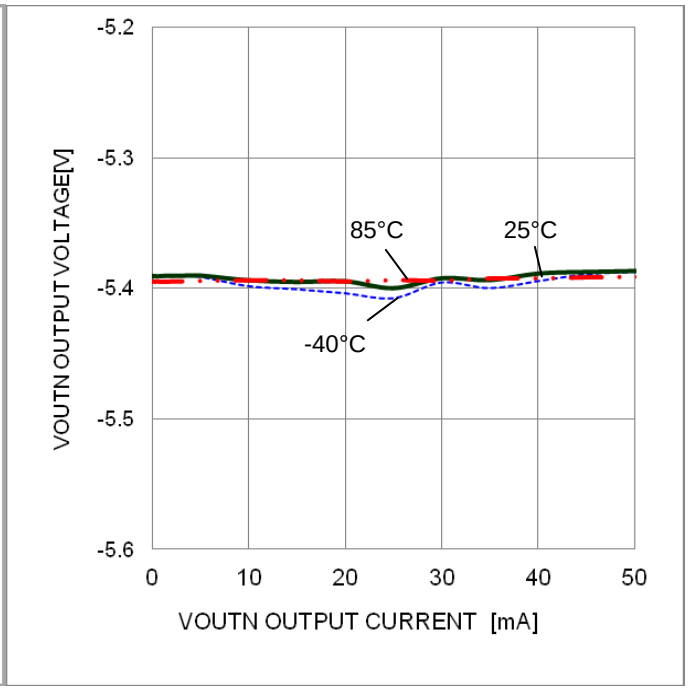

Figure 11. VOUTN Load Regulation

(Ta –40, 25, 85°C)

© 2014 ROHM Co., Ltd. All rights reserved.

Downloaded from Arrow.com.

Typical Performance Curves – continued

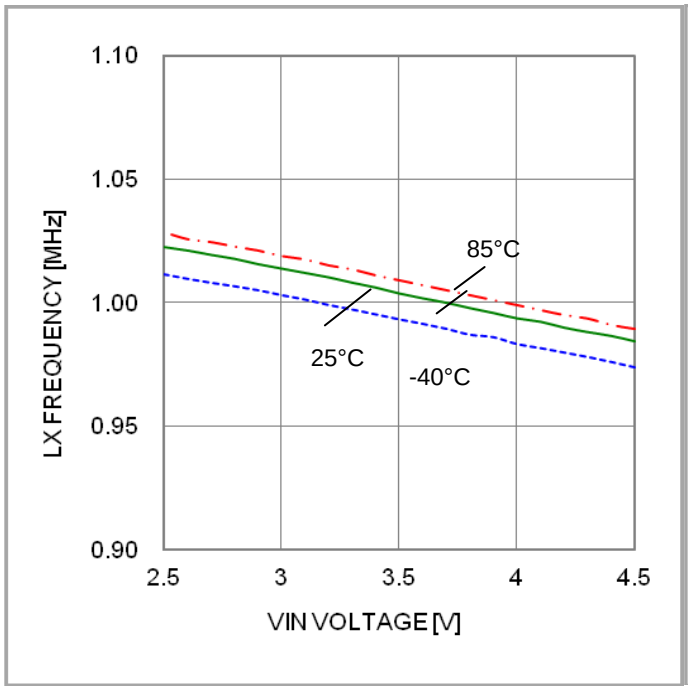

Figure 12. LX Frequency vs VIN Voltage

(Ta –40, 25, 85°C)

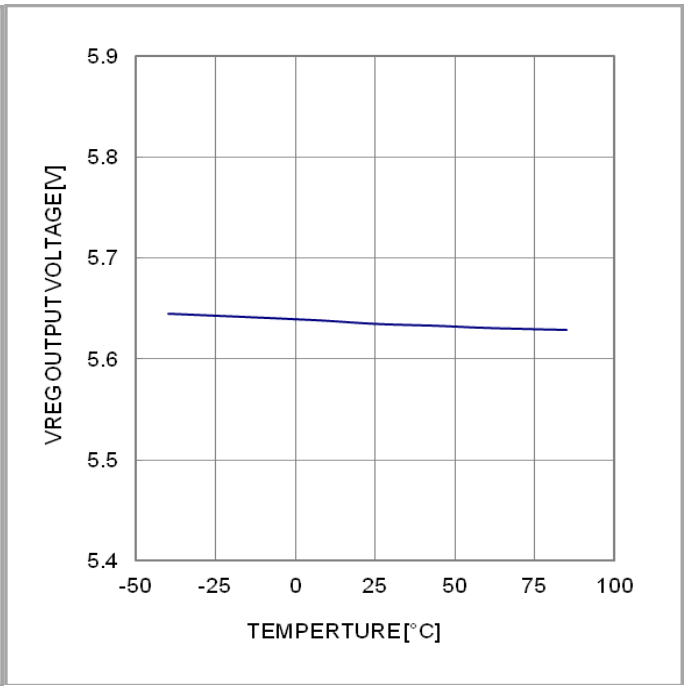

Figure 13. VREG Output Voltage vs Temperature

(V_{IN} =3.7V, Iout=0)

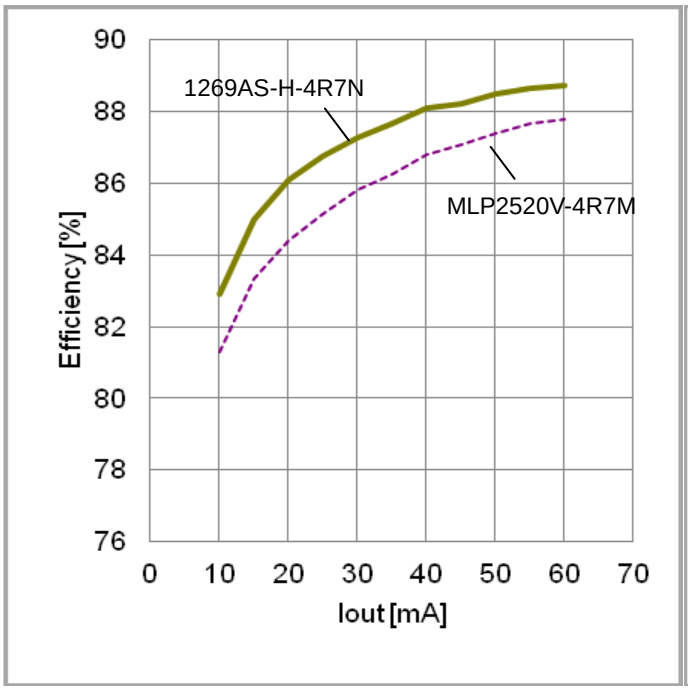

Figure 14. Efficiency vs Iout

(V_{IN} =3.7V, Ta 25°C)

Efficiency
= (VOUTP x Iout - VOUTN x Iout) / (VIN x Idd)

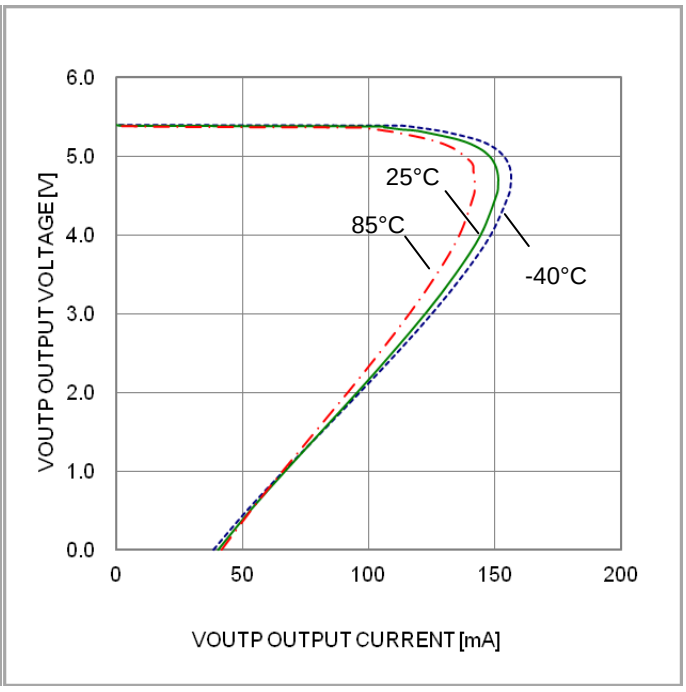

Figure 15. VOUTP vs IVOUTP

(Ta –40, 25, 85°C)

© 2014 ROHM Co., Ltd. All rights reserved.

Downloaded from Arrow.com.

Timing Chart

Recommended Power ON Sequence (STBYP has same timing as STBYN)

STBYP & STBYN are recommended simultaneously to be in H when after VIN becomes more than 2.5V (working range voltage). The through rate should be less than 100µs when STBYP and STBYN are set H simultaneously. It is not relating to soft start but to prevent chattering. STBYN must be high within 5ms from STBYP=H.

Table 1. Function of STBYP and STBYN

STBYP	STBYN	VOUTP	VOUTN	Function Description
L	L	+0V	-0V	The output of VOUTP/N stay "L" before STBYP become "H"
L	L->H	+0V	-0V	
L->H	L	+5.4V	-0V	VOUTP can be controlled independently when STBYN is "L"
H->L	L	+0V	-0V	
L->H	L->H	+5.4V	-5.4V	STBYP and STBYN should be controlled almost at the same timing Gap of STBYP/N should less than 5ms
H	L->H	+0V	-0V	VOUTP will be drived to "L" when setting STBYN to "H" later more than 5ms Otherwise the internal sequence will be disrupted

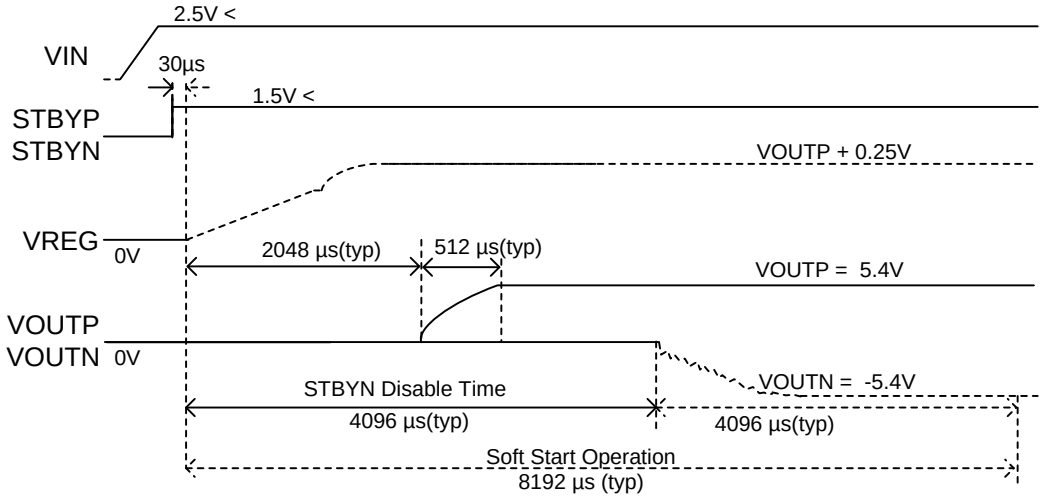

Figure 16. Power ON Sequence Timing (STBYP=STBYN)

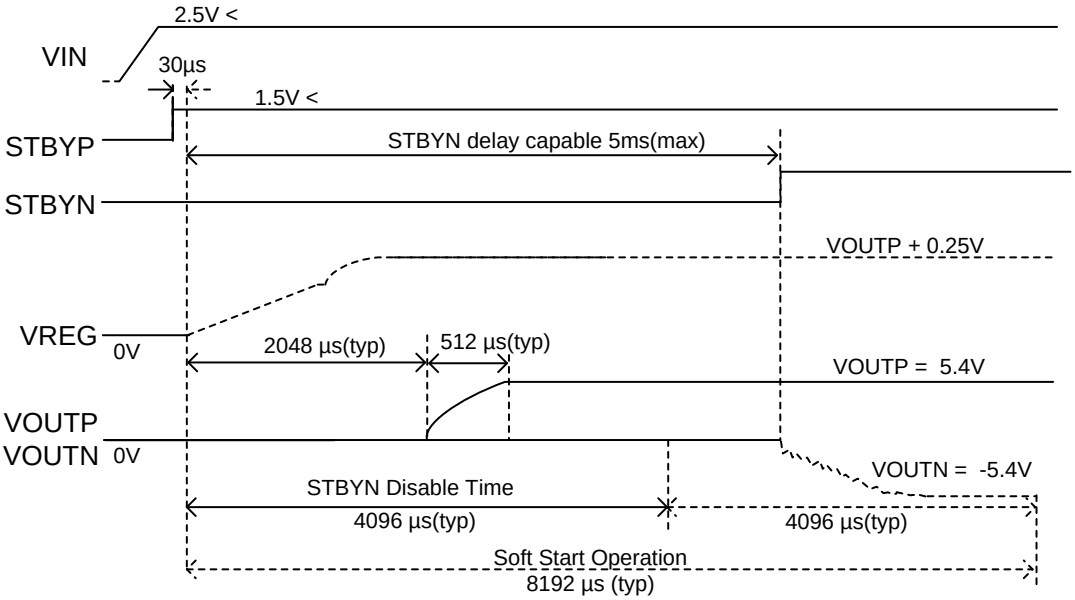

Figure 17. Power ON Sequence Timing (STBYP≠STBYN)

© 2014 ROHM Co., Ltd. All rights reserved.

Downloaded from Arrow.com.

Recommended OFF Sequence (STBYP has same timing as STBYN)

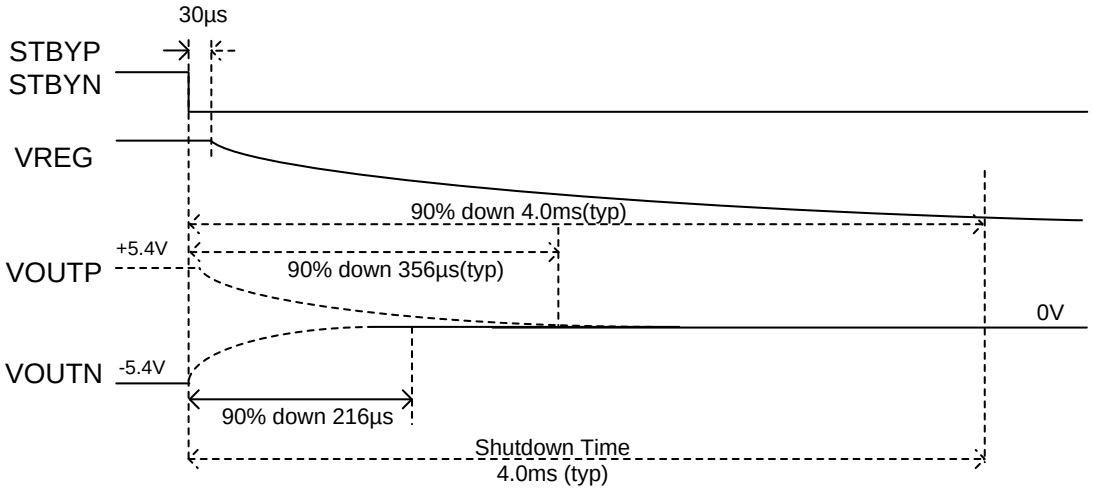

Figure 18. OFF Sequence Timing (STBYP=STBYN)

Recommended OFF Sequence

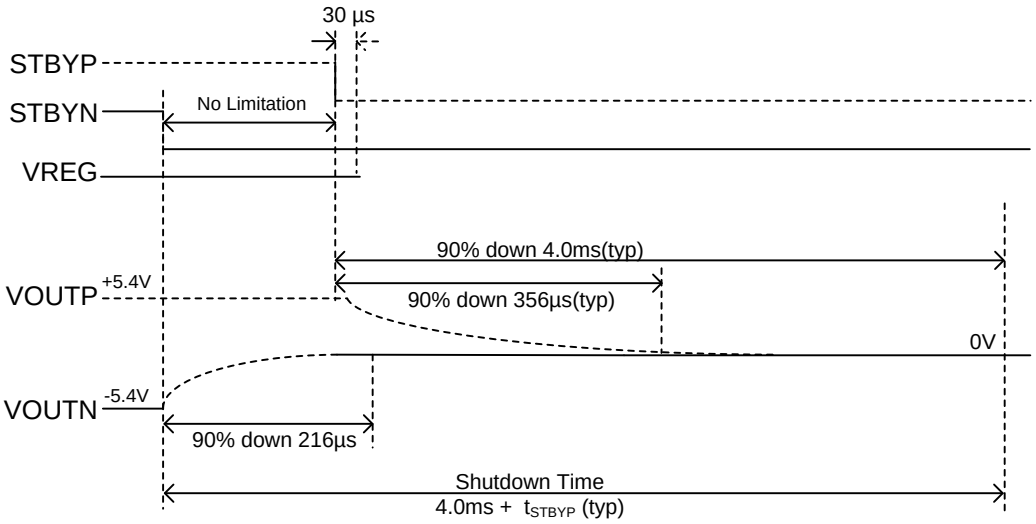

Figure 19. OFF Sequence Timing

© 2014 ROHM Co., Ltd. All rights reserved.

Downloaded from Arrow.com.

Application Information

Description of Protection Circuits

(1) UVLO
Circuit for preventing malfunction at low voltage input.
This circuit prevents malfunction at the start of DC/DC converter operation when there is low input voltage by monitoring the voltage at VIN pin. If VIN voltage is lower than 2.2V, all DC/DC converter outputs are turned OFF, and the timer latch for soft-start circuit is reset.

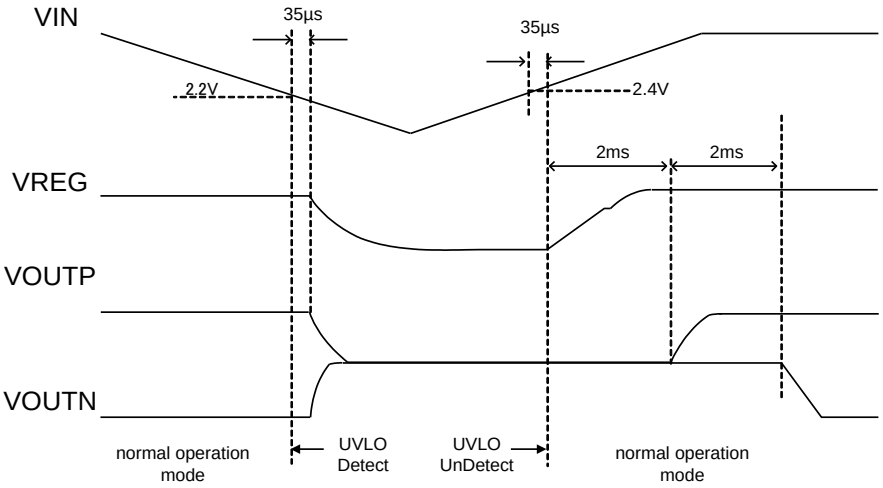

Figure 20. UVLO Detect and Release Sequence Timing

(2) LX OCP (BOOST CONVERTER)
Circuit for preventing malfunction at over-current.
If input inductor current being supplied by VIN exceeds rated electrical characteristics, LX Lside terminal of DC/DC converter turns OFF.

(3) SCP
Short-circuit protection(SCP) function based on latch system that monitor VREG voltage among ON state.
The SCP detection level will be change from 2.1V to 4.55V after Soft Start Operation. When VREG pin voltage is lower than the SCP detection level, the internal SCP circuit turns OFF all DC/DC converter outputs. To reset the latch output circuit, turn OFF STBYP and STBYN pins once then turn it ON or power up the supply again.

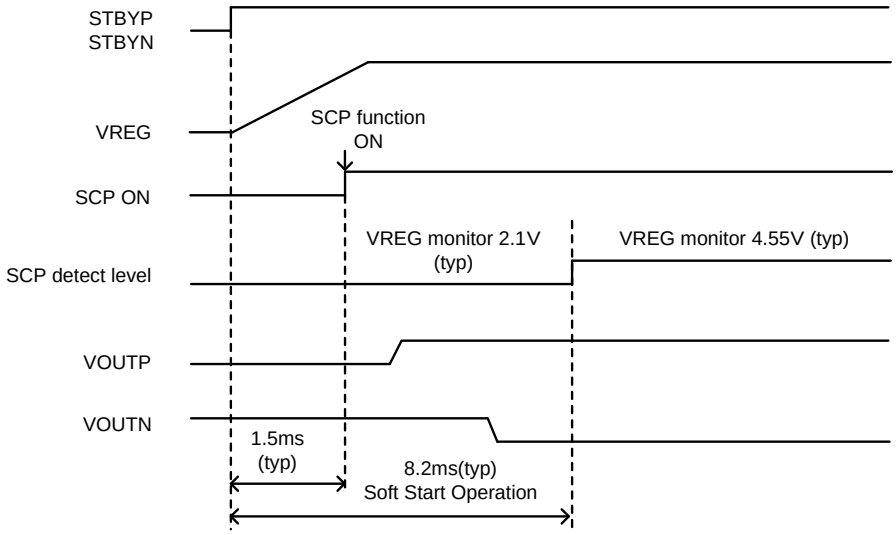

Figure 21. SCP function ON Sequence Timing

© 2014 ROHM Co., Ltd. All rights reserved.

Downloaded from Arrow.com.

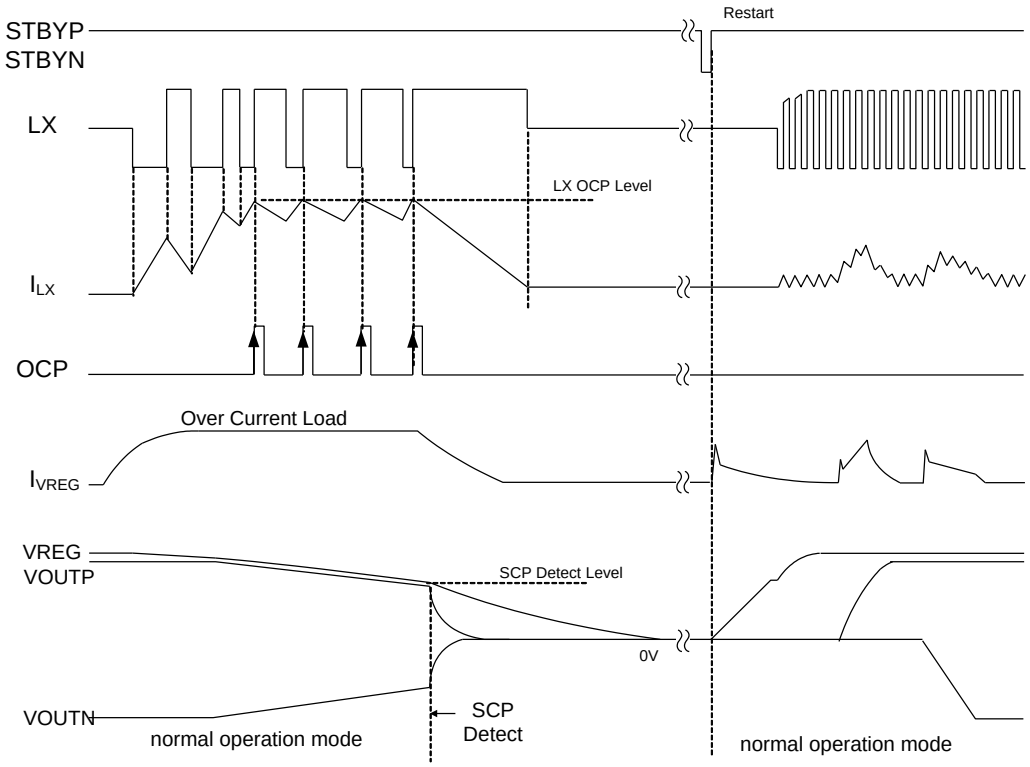

Figure 22. OCP and SCP Detect Sequence Timing

(4) TSD
Circuit for preventing malfunction at high Temperature.
When it detects an abnormal temperature exceeding Maximum Junction Temperature (Tj=150°C), all outputs are turned OFF.

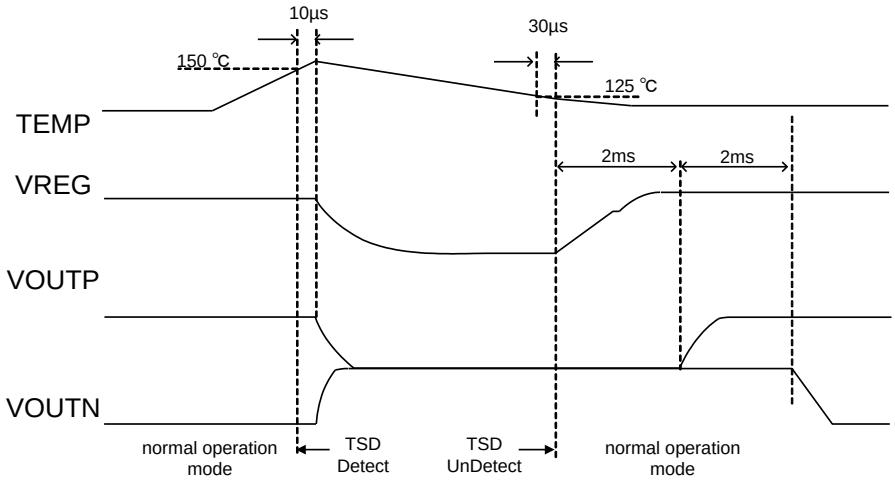

Figure 23. TSD Detect and Release Sequence Timing

(5) VOUTP OCP (LDO)
Circuit for preventing malfunction at over-current.
If VOUTP load current exceeds 200mA, over-current protection circuit is activated and output current of LDO is decreased with respect to VOUTP voltage. If short or overload condition is removed from VOUTP, then the output returns to normal voltage regulation mode.

© 2014 ROHM Co., Ltd. All rights reserved.

Downloaded from Arrow.com.

Application Example

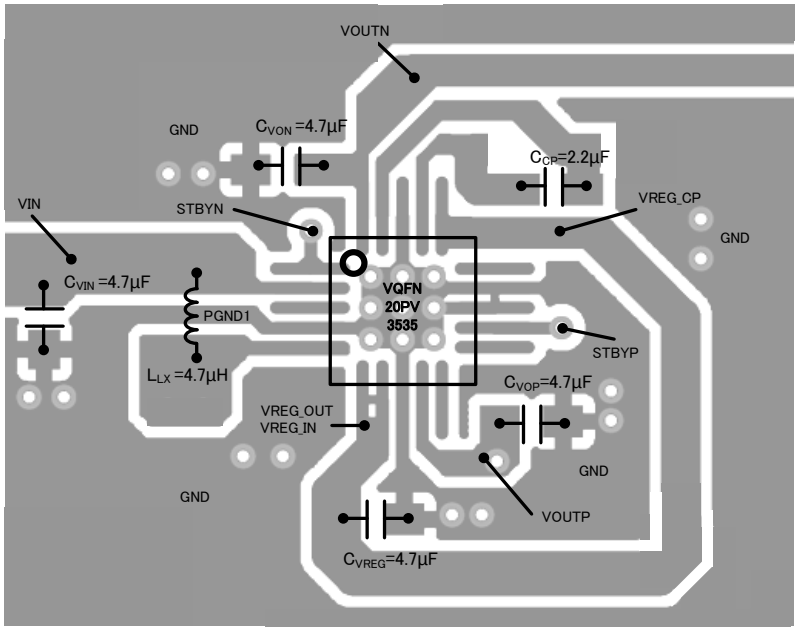

Figure 24. Suggested Layout (Top Layer)

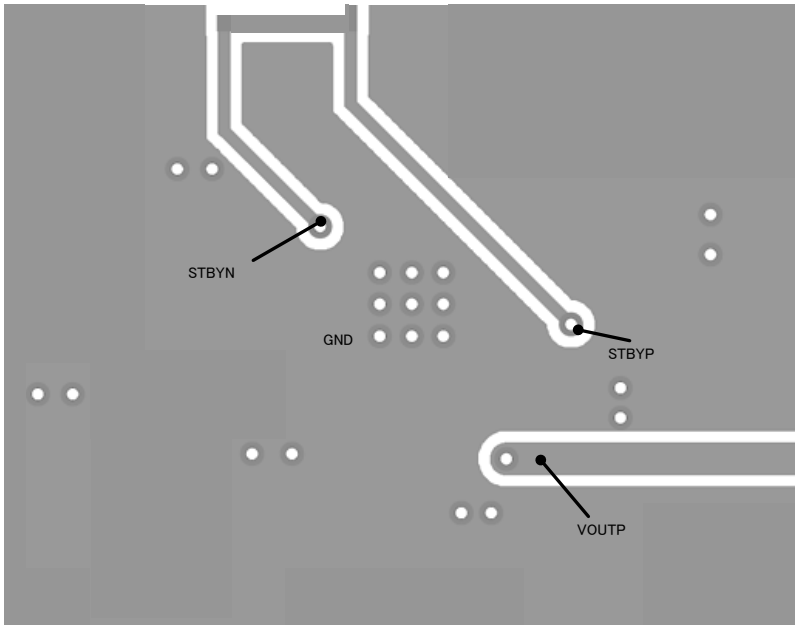

Figure 25. Suggested Layout (Bottom Layer)

Selection of External Components

Table 2. Inductor Selection

Component Code	Inductor [µH]	Vendor	EIA Size (Thickness max.)	DCR (Typ.) [Ω]
1269AS-H-4R7N	4.7	Toko	1008(1.0mm)	0.25
MLP2520V-4R7M	4.7	TDK	1008(1.0mm)	0.24

Table 3. Capacitor Selection

Component Code	Capacitor [µF]	Vendor	EIA Size (Thickness max.)	Voltage Rating [V]
GRM188R61C225KAAD	2.2	Murata	0603 (0.9mm)	16
GRM188R61C475KAAJ	4.7	Murata	0603 (0.9mm)	16

© 2014 ROHM Co., Ltd. All rights reserved.

Downloaded from Arrow.com.

Power Dissipation

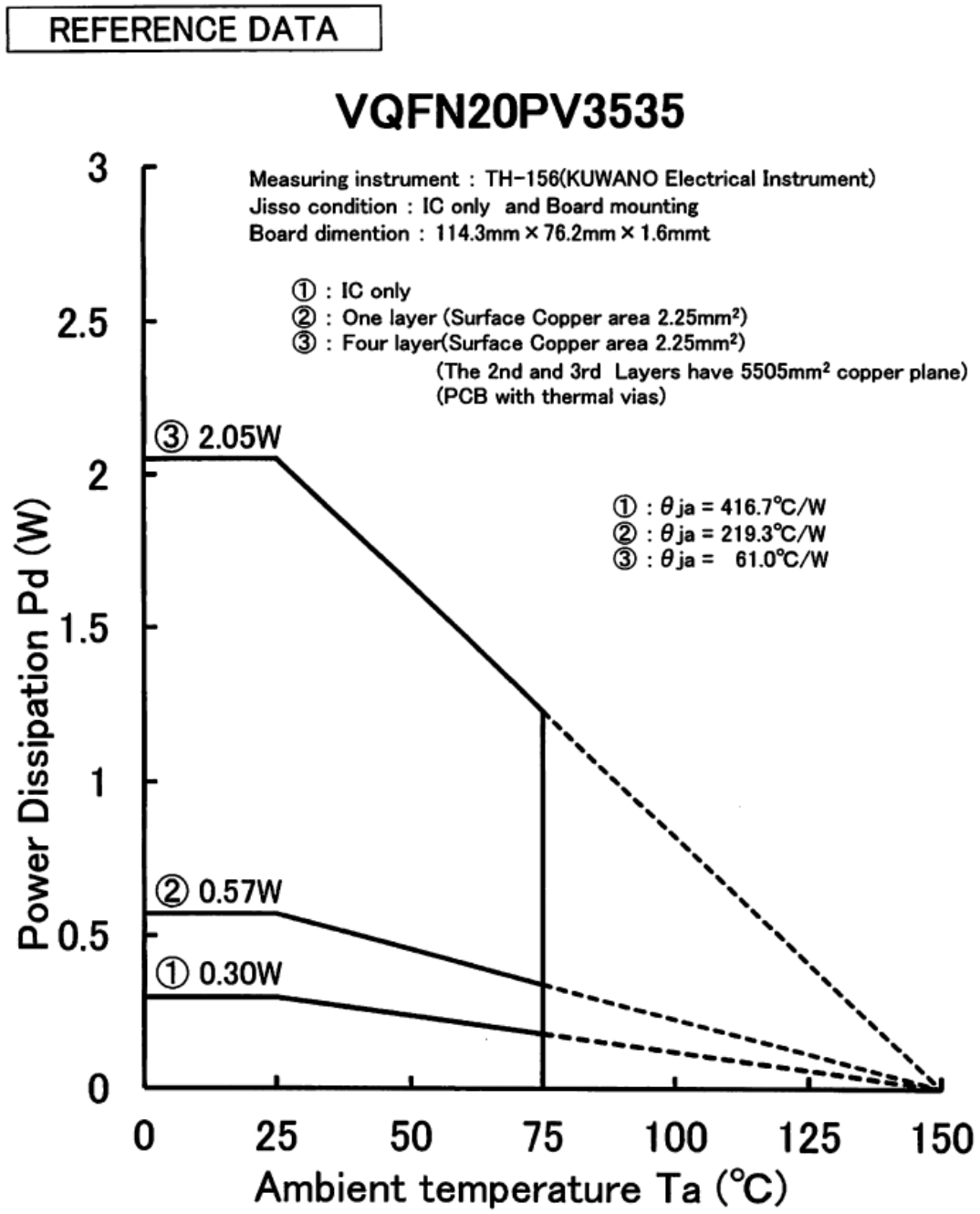

Notes) These values are actual measurements and are not guarantee values.

© 2014 ROHM Co., Ltd. All rights reserved.

Downloaded from Arrow.com.

I/O Equivalence Circuit

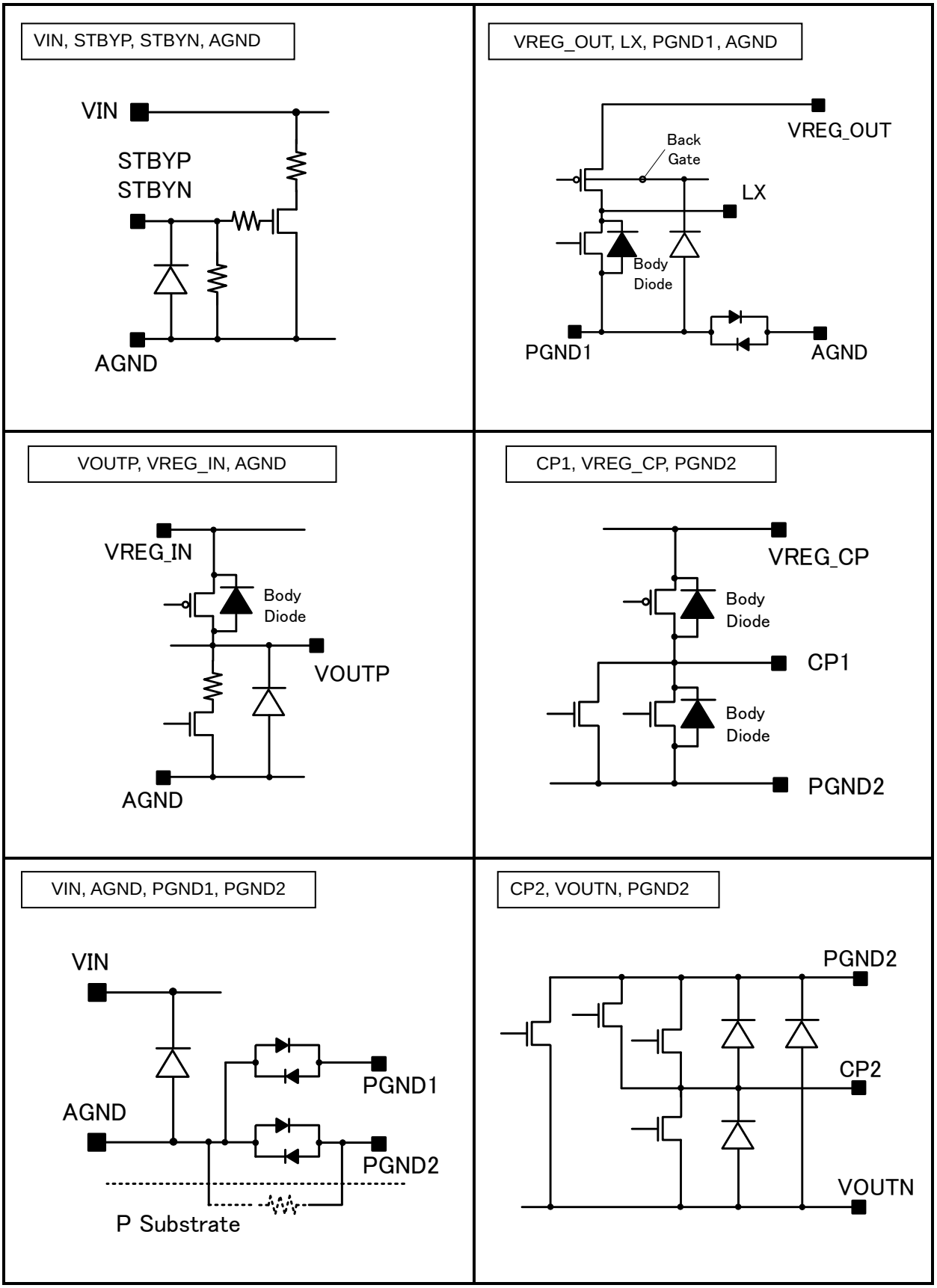

Figure 26. I/O Equivalent Circuit

© 2014 ROHM Co., Ltd. All rights reserved.

Downloaded from Arrow.com.

Operational Notes

1. **Reverse Connection of Power Supply**
   Connecting the power supply in reverse polarity can damage the IC. Take precautions against reverse polarity when connecting the power supply, such as mounting an external diode between the power supply and the IC's power supply pins.

2. **Power Supply Lines**
   Design the PCB layout pattern to provide low impedance supply lines. Separate the ground and supply lines of the digital and analog blocks to prevent noise in the ground and supply lines of the digital block from affecting the analog block. Furthermore, connect a capacitor to ground at all power supply pins. Consider the effect of temperature and aging on the capacitance value when using electrolytic capacitors.

3. **Ground Voltage**
   Except for pins the output the input of which were designed to go below ground, ensure that no pins are at a voltage below that of the ground pin at any time, even during transient condition.

4. **Ground Wiring Pattern**
   When using both small-signal and large-current ground traces, the two ground traces should be routed separately but connected to a single ground at the reference point of the application board to avoid fluctuations in the small-signal ground caused by large currents. Also ensure that the ground traces of external components do not cause variations on the ground voltage. The ground lines must be as short and thick as possible to reduce line impedance.

5. **Thermal Consideration**
   Should by any chance the power dissipation rating be exceeded the rise in temperature of the chip may result in deterioration of the properties of the chip. The absolute maximum rating of the Pd stated in this specification is when the IC is mounted on a 70mm x 70mm x 1.6mm glass epoxy board. In case of exceeding this absolute maximum rating, increase the board size and copper area to prevent exceeding the Pd rating.

6. **Recommended Operating Conditions**
   These conditions represent a range within which the expected characteristics of the IC can be approximately obtained. The electrical characteristics are guaranteed under the conditions of each parameter.

7. **Inrush Current**
   When power is first supplied to the IC, it is possible that the internal logic may be unstable and inrush current may flow instantaneously due to the internal powering sequence and delays, especially if the IC has more than one power supply. Therefore, give special consideration to power coupling capacitance, power wiring, width of ground wiring, and routing of connections.

8. **Operation Under Strong Electromagnetic Field**
   Operating the IC in the presence of a strong electromagnetic field may cause the IC to malfunction.

9. **Testing on Application Boards**
   When testing the IC on an application board, connecting a capacitor directly to a low-impedance output pin may subject the IC to stress. Always discharge capacitors completely after each process or step. The IC's power supply should always be turned off completely before connecting or removing it from the test setup during the inspection process. To prevent damage from static discharge, ground the IC during assembly and use similar precautions during transport and storage.

10. **Inter-pin Short and Mounting Errors**
    Ensure that the direction and position are correct when mounting the IC on the PCB. Incorrect mounting may result in damaging the IC. Avoid nearby pins being shorted to each other especially to ground, power supply and output pin. Inter-pin shorts could be due to many reasons such as metal particles, water droplets (in very humid environment) and unintentional solder bridge deposited in between pins during assembly to name a few.

© 2014 ROHM Co., Ltd. All rights reserved.

Downloaded from Arrow.com.

Operational Notes – continued

11. Unused Input Pins

Input pins of an IC are often connected to the gate of a MOS transistor. The gate has extremely high impedance and extremely low capacitance. If left unconnected, the electric field from the outside can easily charge it. The small charge acquired in this way is enough to produce a significant effect on the conduction through the transistor and cause unexpected operation of the IC. So unless otherwise specified, unused input pins should be connected to the power supply or ground line.

12. Regarding the Input Pin of the IC

This monolithic IC contains P+ isolation and P substrate layers between adjacent elements in order to keep them isolated. P-N junctions are formed at the intersection of the P layers with the N layers of other elements, creating a parasitic diode or transistor. For example (refer to figure below):

When GND > Pin A and GND > Pin B, the P-N junction operates as a parasitic diode.
When GND > Pin B, the P-N junction operates as a parasitic transistor.

Parasitic diodes inevitably occur in the structure of the IC. The operation of parasitic diodes can result in mutual interference among circuits, operational faults, or physical damage. Therefore, conditions that cause these diodes to operate, such as applying a voltage lower than the GND voltage to an input pin (and thus to the P substrate) should be avoided.

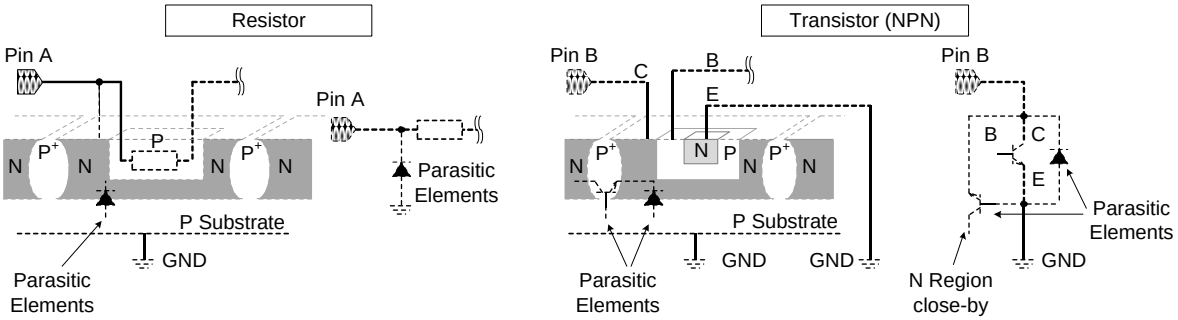

Figure 27. Example of monolithic IC structure

13. Ceramic Capacitor

When using a ceramic capacitor, determine the dielectric constant considering the change of capacitance with temperature and the decrease in nominal capacitance due to DC bias and others.

14. Area of Safe Operation (ASO)

Operate the IC such that the output voltage, output current, and power dissipation are all within the Area of Safe Operation (ASO).

15. Thermal Shutdown Circuit(TSD)

This IC has a built-in thermal shutdown circuit that prevents heat damage to the IC. Normal operation should always be within the IC's power dissipation rating. If however the rating is exceeded for a continued period, the junction temperature (Tj) will rise which will activate the TSD circuit that will turn OFF all output pins. When the Tj falls below the TSD threshold, the circuits are automatically restored to normal operation.
Note that the TSD circuit operates in a situation that exceeds the absolute maximum ratings and therefore, under no circumstances, should the TSD circuit be used in a set design or for any purpose other than protecting the IC from heat damage.

16. Over Current Protection Circuit (OCP)

This IC incorporates an integrated overcurrent protection circuit that is activated when the load is shorted. This protection circuit is effective in preventing damage due to sudden and unexpected incidents. However, the IC should not be used in applications characterized by continuous operation or transitioning of the protection circuit.

© 2014 ROHM Co., Ltd. All rights reserved.

Downloaded from Arrow.com.

Ordering Information

B	D	8	3	8	5	4	M	U	V	-	E2
Part No.		Part No.					Package MUV:VQFN20PV3535				Packaging and forming specification E2: Embossed tape and reel

Marking Diagrams

VQFN20PV3535 (TOP VIEW)

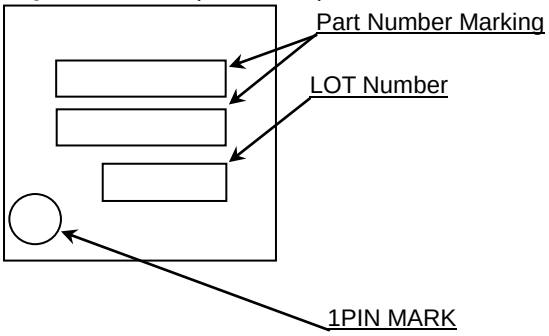

Part Number Marking	Package	Orderable Part Number
BD838 54MUV	VQFN20PV3535	BD83854MUV-E2

© 2014 ROHM Co., Ltd. All rights reserved.

Downloaded from Arrow.com.

Physical Dimension, Tape and Reel Information

Package Name	VQFN20PV3535

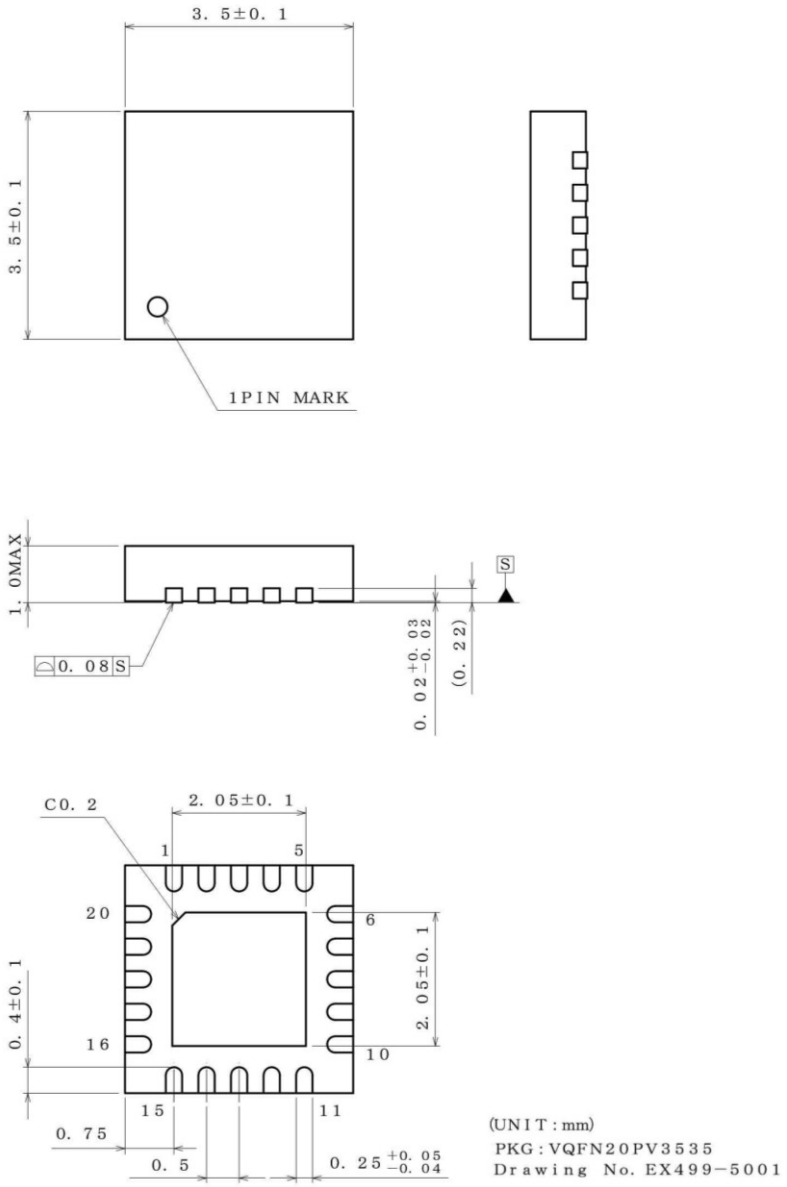

< Tape and Reel Information >

Tape	Embossed carrier tape
Quantity	2500pcs
Direction of feed	E2 The direction is the pin 1 of product is at the upper left when you hold reel on the left hand and you pull out the tape on the right hand

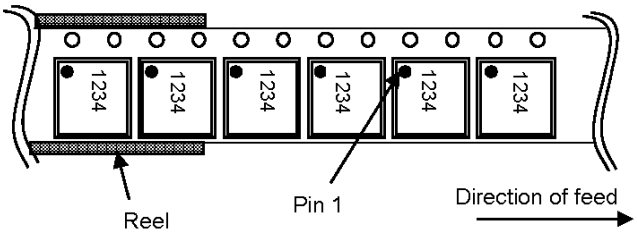

© 2014 ROHM Co., Ltd. All rights reserved.

Downloaded from Arrow.com.

Revision History

Date	Revision	Changes
29.Aug.2014	001	New Release

© 2014 ROHM Co., Ltd. All rights reserved.

Downloaded from Arrow.com.

Notice

Precaution on using ROHM Products

1. Our Products are designed and manufactured for application in ordinary electronic equipments (such as AV equipment, OA equipment, telecommunication equipment, home electronic appliances, amusement equipment, etc.). If you intend to use our Products in devices requiring extremely high reliability (such as medical equipment (Note 1), transport equipment, traffic equipment, aircraft/spacecraft, nuclear power controllers, fuel controllers, car equipment including car accessories, safety devices, etc.) and whose malfunction or failure may cause loss of human life, bodily injury or serious damage to property ("Specific Applications"), please consult with the ROHM sales representative in advance. Unless otherwise agreed in writing by ROHM in advance, ROHM shall not be in any way responsible or liable for any damages, expenses or losses incurred by you or third parties arising from the use of any ROHM's Products for Specific Applications.

(Note1) Medical Equipment Classification of the Specific Applications

JAPAN	USA	EU	CHINA
CLASSⅢ	CLASSⅢ	CLASSⅡb	CLASSⅢ
CLASSⅣ		CLASSⅢ	

2. ROHM designs and manufactures its Products subject to strict quality control system. However, semiconductor products can fail or malfunction at a certain rate. Please be sure to implement, at your own responsibilities, adequate safety measures including but not limited to fail-safe design against the physical injury, damage to any property, which a failure or malfunction of our Products may cause. The following are examples of safety measures:
   [a] Installation of protection circuits or other protective devices to improve system safety
   [b] Installation of redundant circuits to reduce the impact of single or multiple circuit failure

3. Our Products are designed and manufactured for use under standard conditions and not under any special or extraordinary environments or conditions, as exemplified below. Accordingly, ROHM shall not be in any way responsible or liable for any damages, expenses or losses arising from the use of any ROHM's Products under any special or extraordinary environments or conditions. If you intend to use our Products under any special or extraordinary environments or conditions (as exemplified below), your independent verification and confirmation of product performance, reliability, etc, prior to use, must be necessary:
   [a] Use of our Products in any types of liquid, including water, oils, chemicals, and organic solvents
   [b] Use of our Products outdoors or in places where the Products are exposed to direct sunlight or dust
   [c] Use of our Products in places where the Products are exposed to sea wind or corrosive gases, including Cl_2, H_2S, NH_3, SO_2, and NO_2
   [d] Use of our Products in places where the Products are exposed to static electricity or electromagnetic waves
   [e] Use of our Products in proximity to heat-producing components, plastic cords, or other flammable items
   [f] Sealing or coating our Products with resin or other coating materials
   [g] Use of our Products without cleaning residue of flux (even if you use no-clean type fluxes, cleaning residue of flux is recommended); or Washing our Products by using water or water-soluble cleaning agents for cleaning residue after soldering
   [h] Use of the Products in places subject to dew condensation

4. The Products are not subject to radiation-proof design.

5. Please verify and confirm characteristics of the final or mounted products in using the Products.

6. In particular, if a transient load (a large amount of load applied in a short period of time, such as pulse. is applied, confirmation of performance characteristics after on-board mounting is strongly recommended. Avoid applying power exceeding normal rated power; exceeding the power rating under steady-state loading condition may negatively affect product performance and reliability.

7. De-rate Power Dissipation (Pd) depending on Ambient temperature (Ta). When used in sealed area, confirm the actual ambient temperature.

8. Confirm that operation temperature is within the specified range described in the product specification.

9. ROHM shall not be in any way responsible or liable for failure induced under deviant condition from what is defined in this document.

Precaution for Mounting / Circuit board design

1. When a highly active halogenous (chlorine, bromine, etc.) flux is used, the residue of flux may negatively affect product performance and reliability.

2. In principle, the reflow soldering method must be used on a surface-mount products, the flow soldering method must be used on a through hole mount products. If the flow soldering method is preferred on a surface-mount products, please consult with the ROHM representative in advance.

For details, please refer to ROHM Mounting specification

© 2013 ROHM Co., Ltd. All rights reserved.

Downloaded from Arrow.com.

Precautions Regarding Application Examples and External Circuits

1. If change is made to the constant of an external circuit, please allow a sufficient margin considering variations of the characteristics of the Products and external components, including transient characteristics, as well as static characteristics.

2. You agree that application notes, reference designs, and associated data and information contained in this document are presented only as guidance for Products use. Therefore, in case you use such information, you are solely responsible for it and you must exercise your own independent verification and judgment in the use of such information contained in this document. ROHM shall not be in any way responsible or liable for any damages, expenses or losses incurred by you or third parties arising from the use of such information.

Precaution for Electrostatic

This Product is electrostatic sensitive product, which may be damaged due to electrostatic discharge. Please take proper caution in your manufacturing process and storage so that voltage exceeding the Products maximum rating will not be applied to Products. Please take special care under dry condition (e.g. Grounding of human body / equipment / solder iron, isolation from charged objects, setting of Ionizer, friction prevention and temperature / humidity control).

Precaution for Storage / Transportation

1. Product performance and soldered connections may deteriorate if the Products are stored in the places where:
   [a] the Products are exposed to sea winds or corrosive gases, including Cl2, H2S, NH3, SO2, and NO2
   [b] the temperature or humidity exceeds those recommended by ROHM
   [c] the Products are exposed to direct sunshine or condensation
   [d] the Products are exposed to high Electrostatic

2. Even under ROHM recommended storage condition, solderability of products out of recommended storage time period may be degraded. It is strongly recommended to confirm solderability before using Products of which storage time is exceeding the recommended storage time period.

3. Store / transport cartons in the correct direction, which is indicated on a carton with a symbol. Otherwise bent leads may occur due to excessive stress applied when dropping of a carton.

4. Use Products within the specified time after opening a humidity barrier bag. Baking is required before using Products of which storage time is exceeding the recommended storage time period.

Precaution for Product Label

QR code printed on ROHM Products label is for ROHM's internal use only.

Precaution for Disposition

When disposing Products please dispose them properly using an authorized industry waste company.

Precaution for Foreign Exchange and Foreign Trade act

Since our Products might fall under controlled goods prescribed by the applicable foreign exchange and foreign trade act, please consult with ROHM representative in case of export.

Precaution Regarding Intellectual Property Rights

1. All information and data including but not limited to application example contained in this document is for reference only. ROHM does not warrant that foregoing information or data will not infringe any intellectual property rights or any other rights of any third party regarding such information or data. ROHM shall not be in any way responsible or liable for infringement of any intellectual property rights or other damages arising from use of such information or data.:

2. No license, expressly or implied, is granted hereby under any intellectual property rights or other rights of ROHM or any third parties with respect to the information contained in this document.

Other Precaution

1. This document may not be reprinted or reproduced, in whole or in part, without prior written consent of ROHM.

2. The Products may not be disassembled, converted, modified, reproduced or otherwise changed without prior written consent of ROHM.

3. In no event shall you use in any way whatsoever the Products and the related technical information contained in the Products or this document for any military purposes, including but not limited to, the development of mass-destruction weapons.

4. The proper names of companies or products described in this document are trademarks or registered trademarks of ROHM, its affiliated companies or third parties.

© 2013 ROHM Co., Ltd. All rights reserved.

Downloaded from Arrow.com.

General Precaution

1. Before you use our Products, you are requested to carefully read this document and fully understand its contents. ROHM shall not be in any way responsible or liable for failure, malfunction or accident arising from the use of any ROHM's Products against warning, caution or note contained in this document.

2. All information contained in this document is current as of the issuing date and subject to change without any prior notice. Before purchasing or using ROHM's Products, please confirm the latest information with a ROHM sales representative.

3. The information contained in this document is provided on an "as is" basis and ROHM does not warrant that all information contained in this document is accurate and/or error-free. ROHM shall not be in any way responsible or liable for any damages, expenses or losses incurred by you or third parties resulting from inaccuracy or errors of or concerning such information.

© 2014 ROHM Co., Ltd. All rights reserved.

Downloaded from Arrow.com.