SYMBOL DEFINITION			MISSING SYMBOLS
A DIMENSION WITHOUT AN INSPECTION REPORT SYMBOL ⬭ DOES NOT REQUIRE INSPECTION. IT MAY BE CONTROLLED ON THE INDIVIDUAL COMPONENT DRAWING.	TOTAL NO OF INSPECTIONS REQUIRED	10	NO MISSING SYMBOL NUMBER
	LAST NO. USED	10	

DWG STATUS DATE	STG	REV	N/P	CHG	ZONE	REVISION HISTORY	AUTH	DR	APVD 1	APVD 2
03AP07	R	01	-	-		RELEASED	400744	AZ	OY	AZ

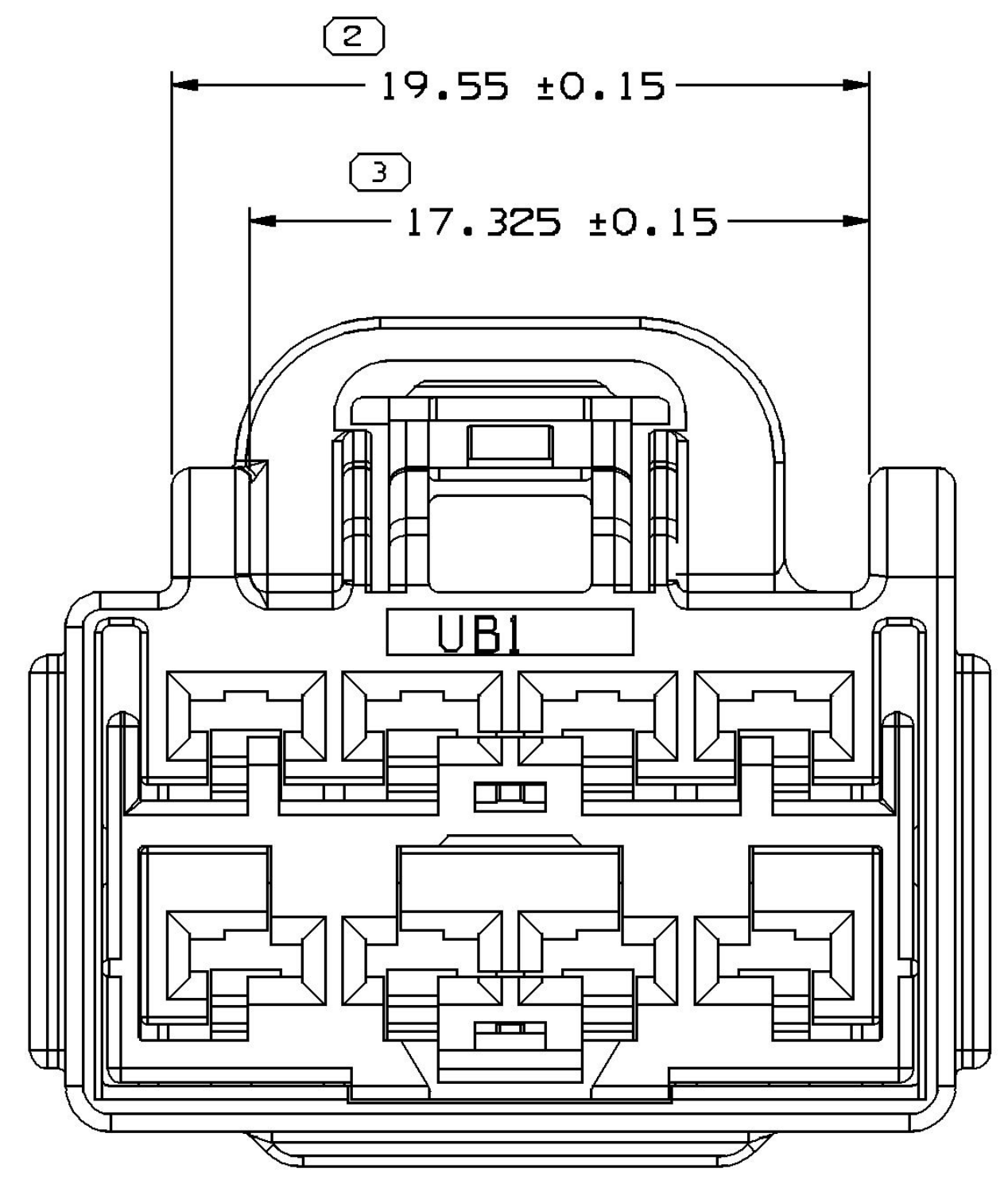

TYPE B

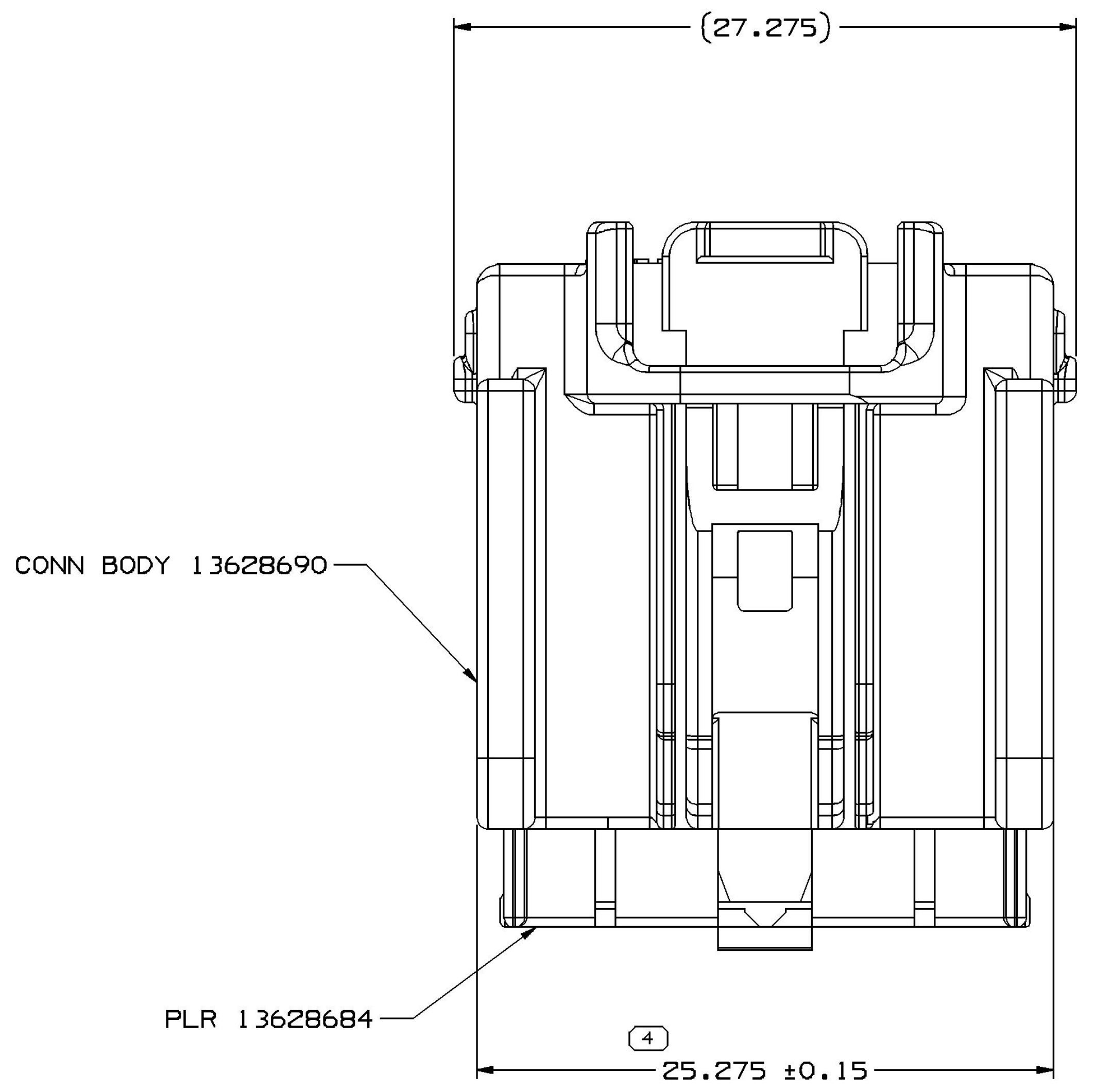

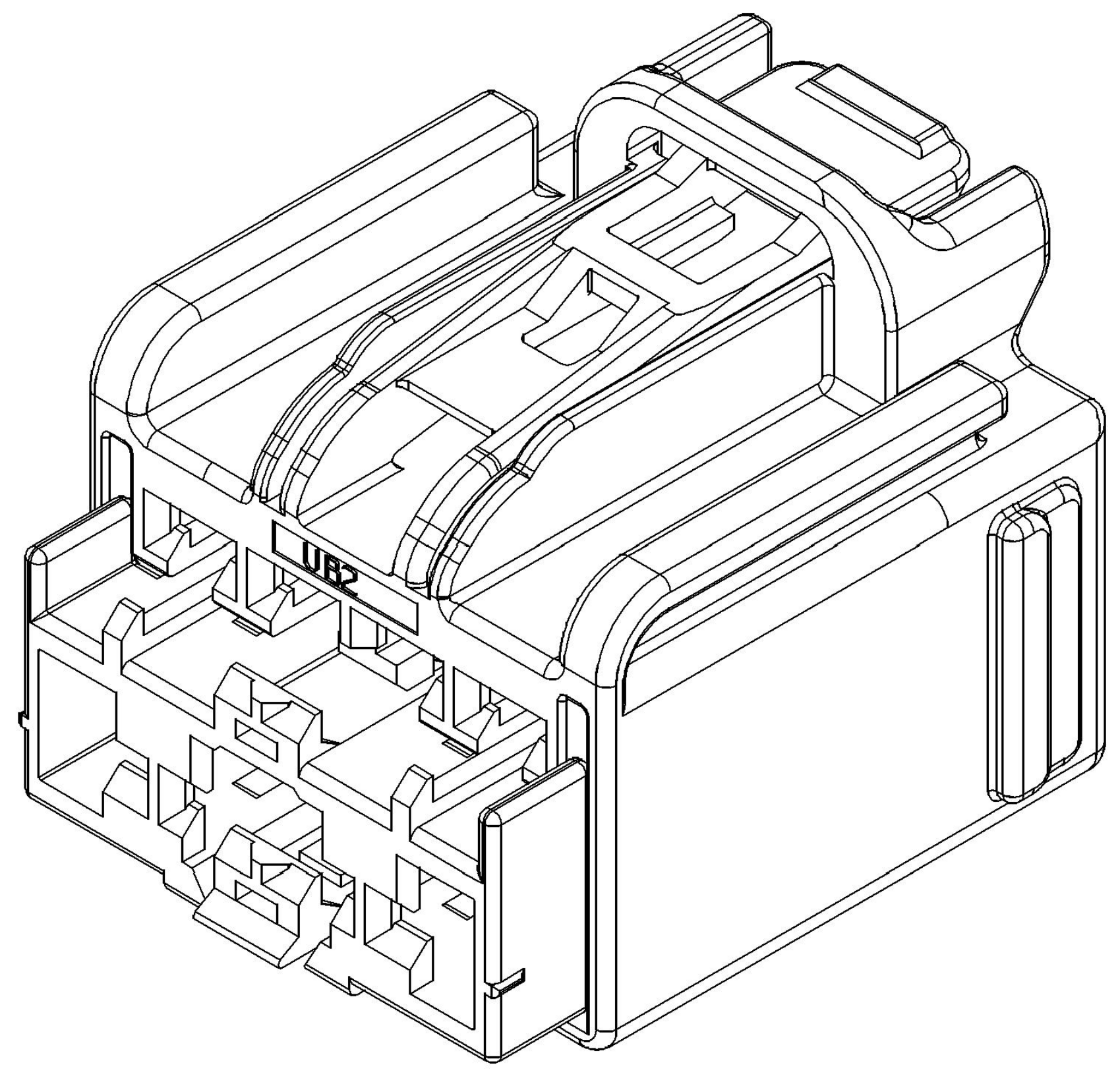

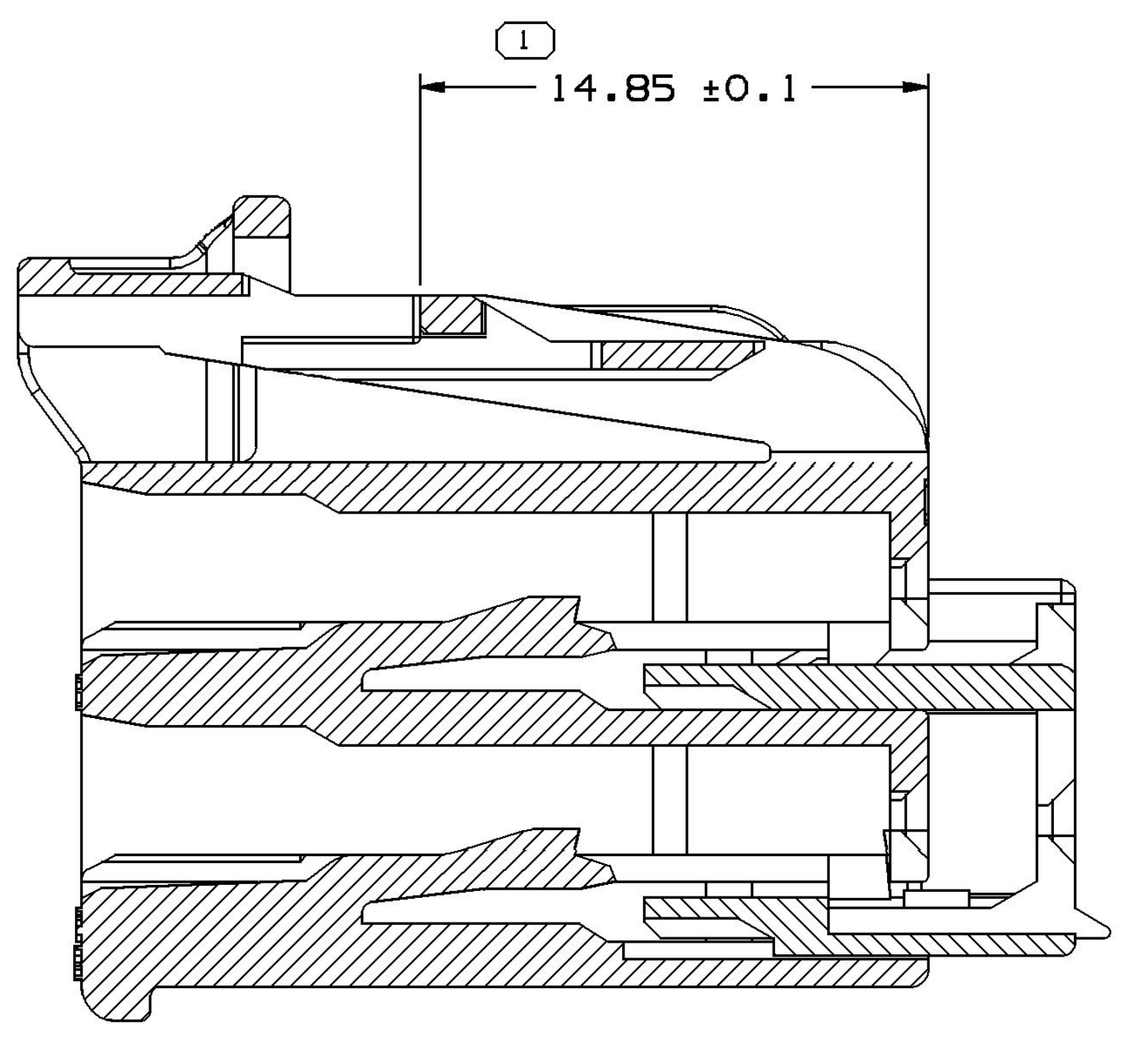

SECTION A-A

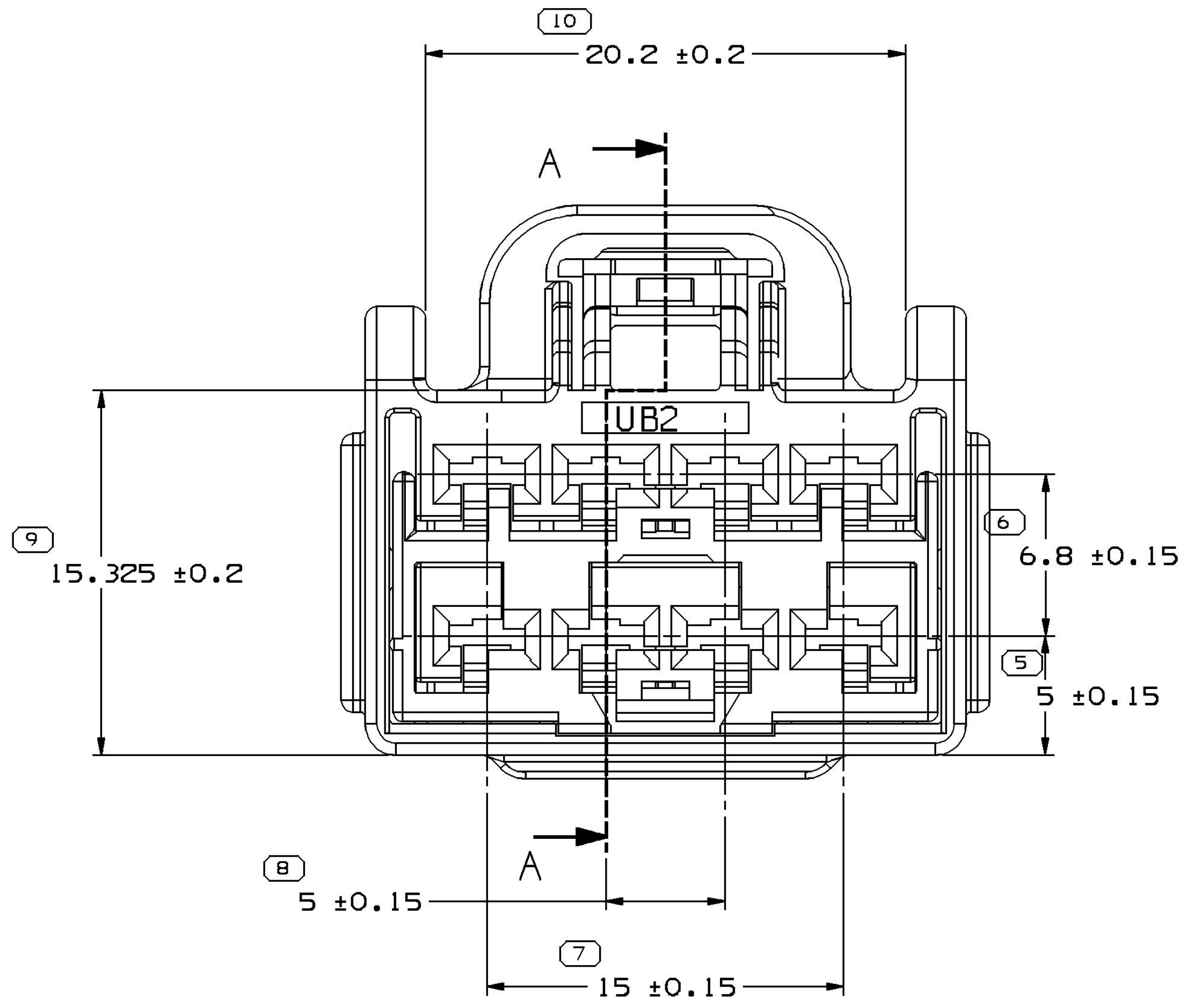

TYPE A

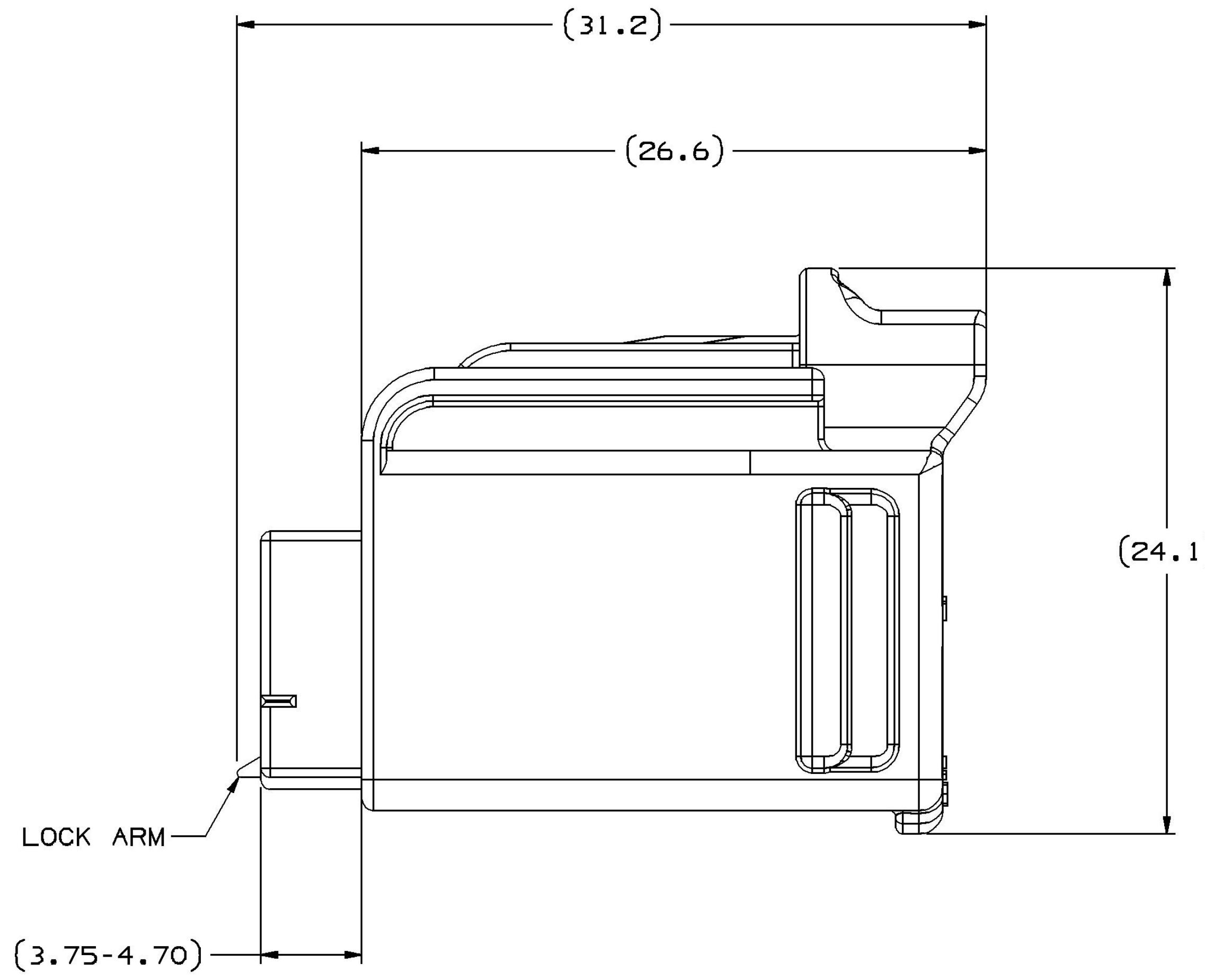

PLR IN PRE-STAGE POSITION

NOTES

1. UNLESS OTHERWISE SPECIFIED AND/OR INDICATED:

   DIMENSIONS ARE TO FACE OF VIEW SHOWN AND AUTOMATICALLY ROUNDED BY COMPUTER FOR INSPECTION (SEE MATH MODEL FOR PRECISE DIMENSIONS). FOR ALL OTHER DIMENSIONS NOT SHOWN BUT REQUIRED FOR TOOL BUILD, SEE MATH MODEL FOR PRECISE TOOL PATH DATA.
2. THIS PRODUCT IS NOT CATEGORIZED AS AN APPEARANCE ITEM, MINOR IMPERFECTIONS INCLUDING, BUT NOT LIMITED TO, FLOW MARKS, COLOR BLEMISHES, GATE VESTIGE, AND SOFT FLASH THAT DO NOT AFFECT THE FIT, FORM, OR FUNCTION OF THE PART ARE PERMISSIBLE PER NAP 4.10-18.
3. REFERENCE MATING COMPONENTS OR EQUIVALENT:

   SEE CUSTOMER DRAWING 8U5T-14489-DA
4. THIS PART ACCEPTS THE FOLLOWING COMPONENTS OR EQUIVALENT:

   SEE CHART
5. FOR MATING CONFIGURATION REQUIREMENTS, SEE CUSTOMER DRAWING 8U5T-14489-DA.
6. FOR APPLICATION DATA SEE THE INDIVIDUAL APPLICATION DRAWINGS.

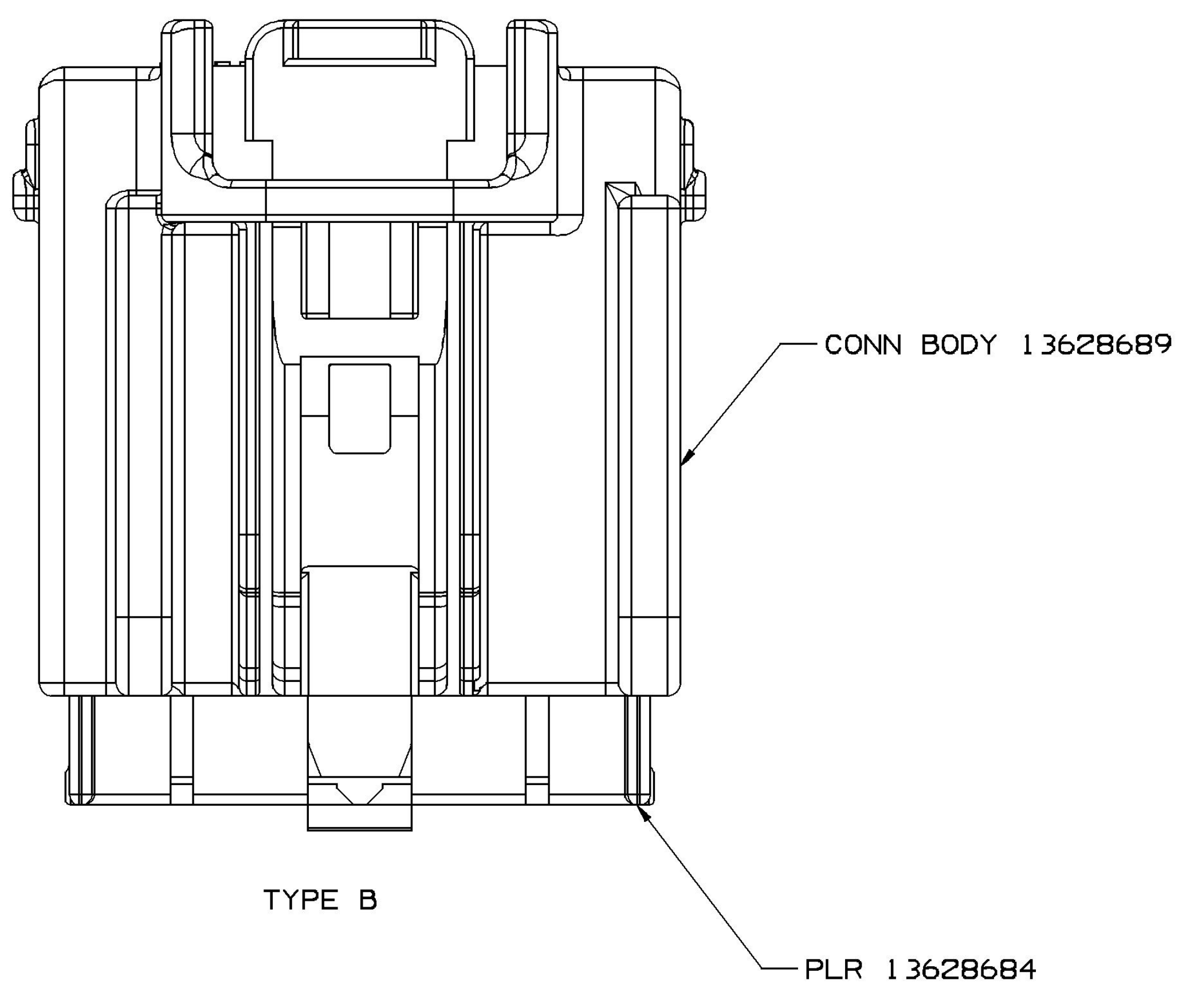

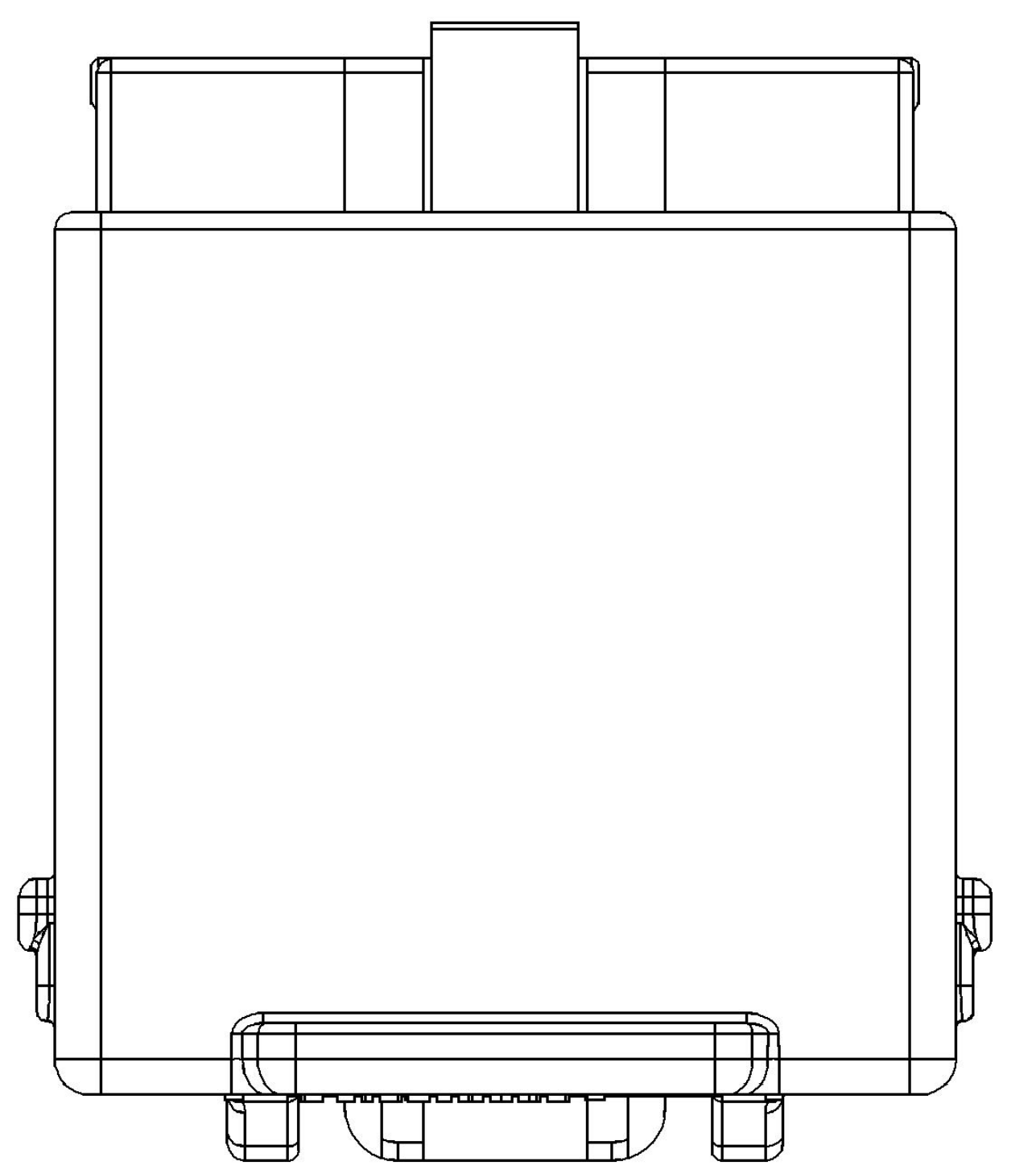

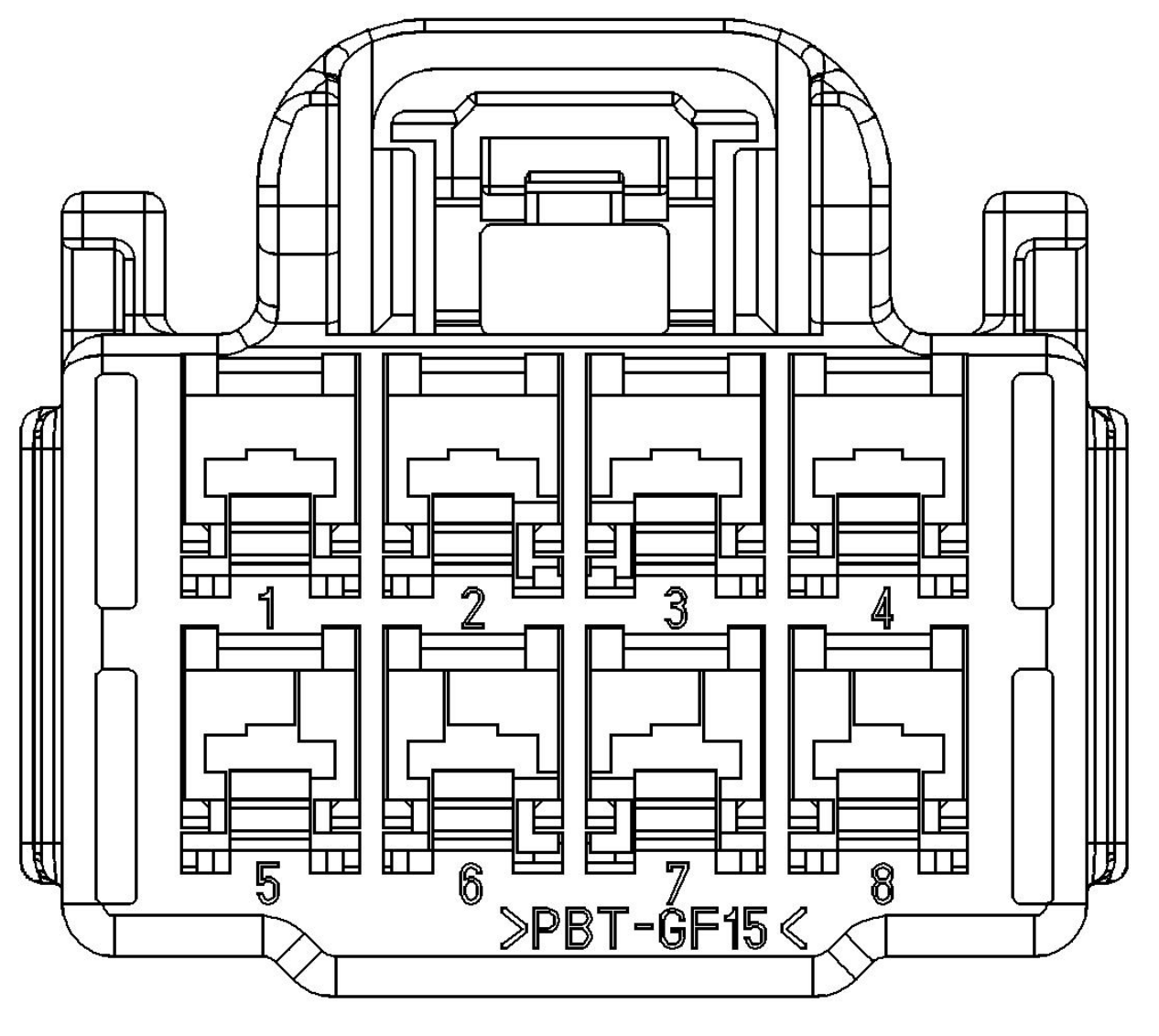

13628692	01	-	R	B	13628689	13628684
13628691	01	-	R	A	13628690	13628684
PART NO	REV	N/P	STATUS	TYPE	CONN BODY	PLR

DIMENSIONAL RANGE (MM)									CHART E1
FROM	>0	>20	>30	>70	>100	>150	>200	>250	>300
TO	20	30	70	100	150	200	250	300	400
TOLERANCE UNLESS OTHERWISE SPECIFIED									
	±0.15	±0.2	±0.3	±0.4	±0.5	±0.6	±0.8	±1	±1.2
ANGULAR TOLERANCE ±2°									

(N/A) PROCESS SENSITIVE DIMENSION

DIMENSIONS ENCLOSED IN ( ) INDICATE REFERENCE DIMENSIONS AND NO TOLERANCE LIMITS ARE ESTABLISHED

DWG TYPE
PART DRAWING

STYLE

VOLUME (CM³)

DISTR CODE
D

UNLESS OTHERWISE SPECIFIED

THIS DOCUMENT IS IN ACCORDANCE WITH ASME Y14.5M-1994 AS AMENDED BY THE GM GLOBAL DIMENSIONING AND TOLERANCING ADDENDUM-2001. SEPARATE PATTERNS OF FEATURES MAY BE GAGED SEPARATELY REGARDLESS OF DATUM REFERENCES.

ALL DIMENSIONS ARE IN MILLIMETERS

REFERENCE

THIRD ANGLE PROJECTION

DO NOT SCALE

USE MATH DATA

CAD NX

DELPHI

DELPHI PACKARD ELECTRIC SYSTEMS
WARREN, OH

		DATE
DR		
APVD1	ALLEN ZHANG	03AP07
APVD2	OLIVER YU	03AP07
APVD3	ALLEN ZHANG	03AP07
APVD4		
APVD5		

SUBSTANCES OF CONCERN AND RECYCLED CONTENT PER DELPHI 10949001

MATERIAL
SEE COMPONENT DRAWING

DRAWING NAME
TAXI CONN 8 F 2.8

DRAWING NUMBER
13642553

SIZE	SCALE	FRAME NO	SHEET NO	STG	REV	N/P
A0	5:1	1 OF 1	1 OF 1	R	01	-

User: jz56wh
Part: 13642553-CUS01-S01 Date: 07-Nov-07 Time: 15:29
Message: