SERIES: VBM-70 | DESCRIPTION: AC-DC POWER SUPPLY

FEATURES

- universal input range (90 ~ 264 Vac)
- wide operating temperature range (-40 to +85 °C)
- ultra-low profile (17 mm)
- Class B emissions; no external components required
- over temperature, over voltage, over current, and short circuit protections
- low no-load power consumption (150 mW)

MODEL	output voltage (Vdc)	output current max (A)	output power max (W)	ripple and noise[1] max (mVp-p)	efficiency[2] typ (%)
VBM-70-12	12	5.83	70.0	120	88.0
VBM-70-24	24	2.92	70.0	240	88.5
VBM-70-36	36	1.94	69.8	360	89.0
VBM-70-48	48	1.46	70.0	480	89.5

Notes:
1. Ripple and noise are measured at 20 MHz BW with 10 uF aluminum electrolytic capacitor and 0.1 uF ceramic capacitor on the output.
2. Measured at 230 Vac, full load, and 25°C.
3. All specifications measured at: Ta=25°C, 230 Vac input voltage and 60% rated output load, unless otherwise specified.

PART NUMBER KEY

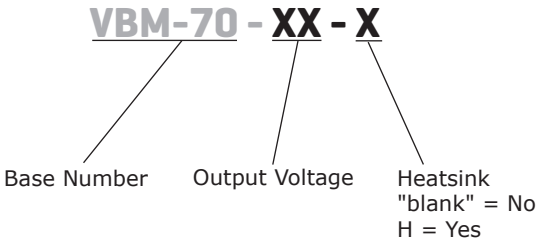

Please read our datasheet & drawing disclaimer here.
Downloaded from Arrow.com.

INPUT

parameter	conditions/description	min	typ	max	units
voltage[4]	AC input DC input	90 127		264 370	Vac Vdc
frequency		47		63	Hz
leakage current	at 264 Vac			3.5	mA
no load power consumption				0.15	W
isolation voltage	for 1 minute	3,000			Vac

Notes: 4. Safety approvals only apply to the AC input.

OUTPUT

parameter	conditions/description	min	typ	max	units
line regulation	90~264 Vac, full load			±0.5	%
load regulation	60% ±40% rated load			±1	%
voltage accuracy	25°C, full load			±1	%
hold-up time	at 115 Vac		6		ms
switching frequency			65		kHz

PROTECTIONS

parameter	conditions/description		min	typ	max	units
over current protection	auto recovery, hiccup		110		150	%
over voltage protection	auto recovery	12 Vdc output model 24 Vdc output model 36 Vdc output model 48 Vdc output model			16 35 50 63	Vdc Vdc Vdc Vdc
short circuit protection	auto recovery					
over temperature protection	auto recovery					

SAFETY AND COMPLIANCE

parameter	conditions/description	min	typ	max	units
isolation voltage	input to output for 1 minute input to ground for 1 minute output to ground for 1 minute	3,000 1,800 500			Vac Vac Vac
safety approvals	certified to 62368: IEC/UL/EN				
conducted emissions	EN 55032: 2015+AC: 2016, EN 61204-3: 2000, EN 61000-6-3: 2007+A1: 2011+AC: 2012, EN 61000-6-4: 2007+A1: 2011, 47 CFR FCC Part 15 Subpart B, Class B				
radiated emissions	EN 55032: 2015+AC: 2016, EN 61204-3: 2000, EN 61000-6-3: 2007+A1: 2011+AC: 2012, EN 61000-6-4: 2007+A1: 2011, 47 CFR FCC Part 15 Subpart B, Class B				
harmonic current	EN 61000-3-2: 2014				
ESD	IEC 61000-4-2: 2008, Air Discharge: ±8KV, Contact Discharge: ±4KV, perf. Criteria A				
radiated immunity	EN 55035:2017, EN 61204-3:2000, EN 61000-6-1:2019, EN 61000-6-2:2019				
EFT/Burst	IEC 61000-4-4: 2012, ±1kv, ±2kv, perf. Criteria A				
surge	IEC 61000-4-5: 2014+A1: 2017, perf. Criteria A L-N: ±0.5kv, ±1kv, L/N-E(Earth): ±0.5kv, ±1kv, ±2kv, perf. Criteria A				
conducted immunity	EN 55035: 2017, EN 61204-3: 2000, EN 61000-6-1: 2019, EN 61000-6-2: 2019				
voltage dips and interruption	IEC 61000-4-11: 2004+A1: 2017, Dip: 30% Reduction, Dip >95% Reduction, perf. Criteria A				
MTBF	as per MIL-HDBK-217F at 25°C	550,000			hours
RoHS compliant	yes				

Downloaded from Arrow.com.

ENVIRONMENTAL

parameter	conditions/description	min	typ	max	units
operating temperature	see derating curves	-40		85	°C
storage temperature		-40		85	°C
humidity	non-condensing			93	%
operating case temperature	at the cener of base plate	-40		85	°C
operating altitude	non-condensing			5,000	m

DERATING CURVES

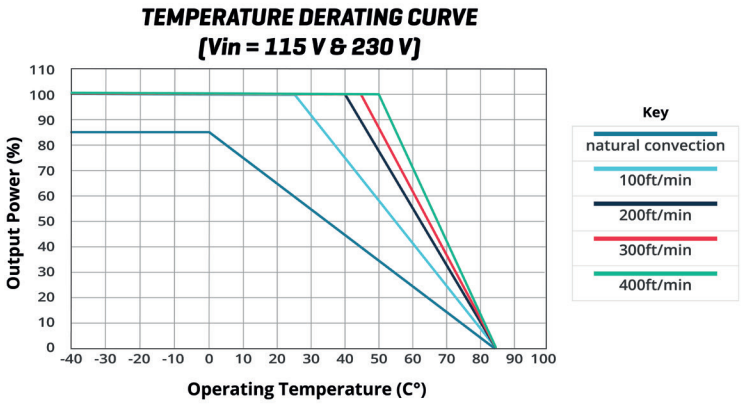

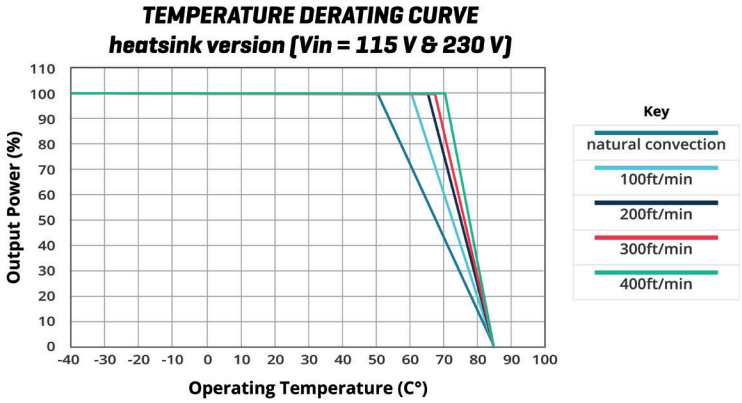

EFFICIENCY CURVES

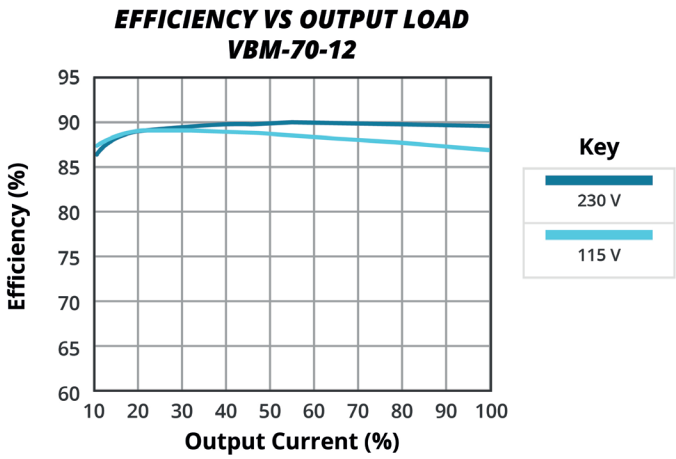

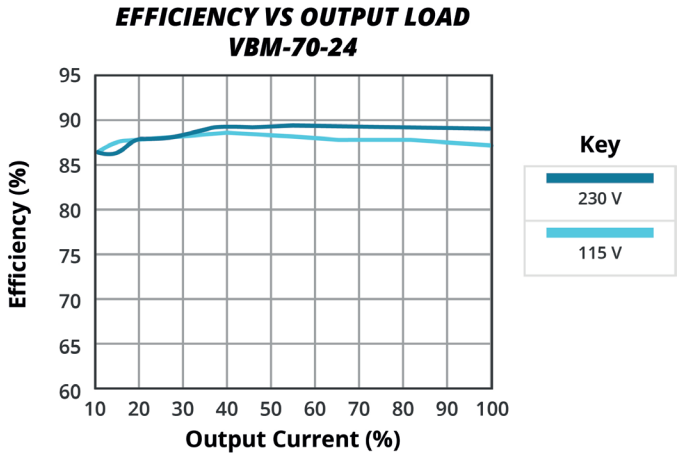

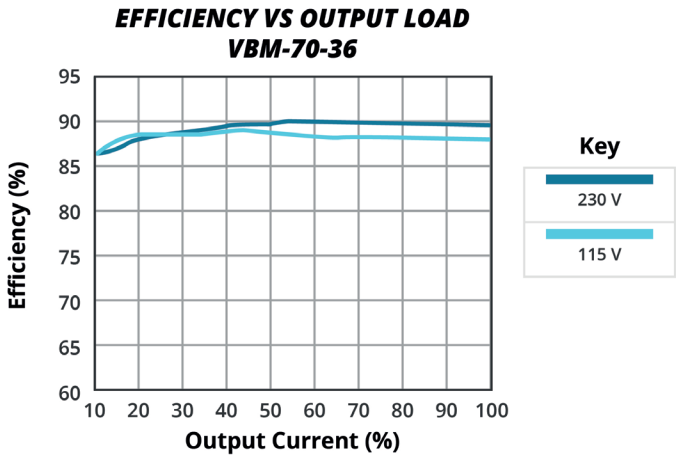

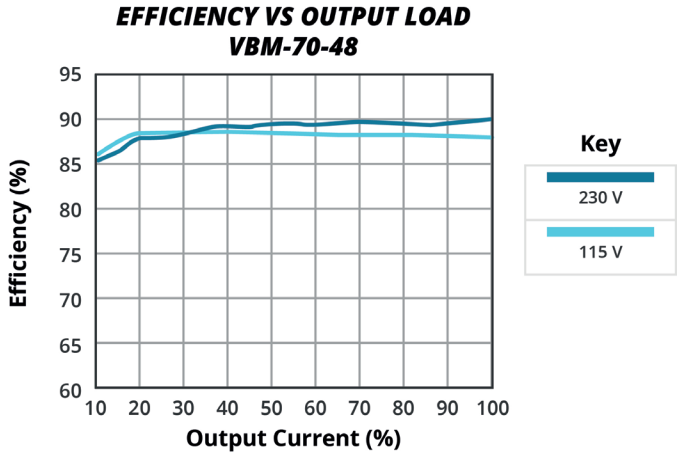

Downloaded from Arrow.com.

MECHANICAL

parameter	conditions/description	min	typ	max	units
dimensions		2.28 x 2.40 x 0.67 [57.9 x 61.0 x 17.0 mm]			inches
	with heatsink	2.39 x 2.28 x 1.46 [60.7 x 58.0 x 37.0 mm]			inches
weight			135		g
	with heatsink		260		g

MECHANICAL DRAWING

units: inch [mm]
tolerance: inches: x.xx = ±0.02, x.xxx = ±0.010
mm: x.x = ±0.5, x.xx = ±0.25

PIN CONNECTIONS	
PIN	FUNCTION
1	AC (L)
2	AC (N)
3	+Vo
4	Trim
5	-Vo

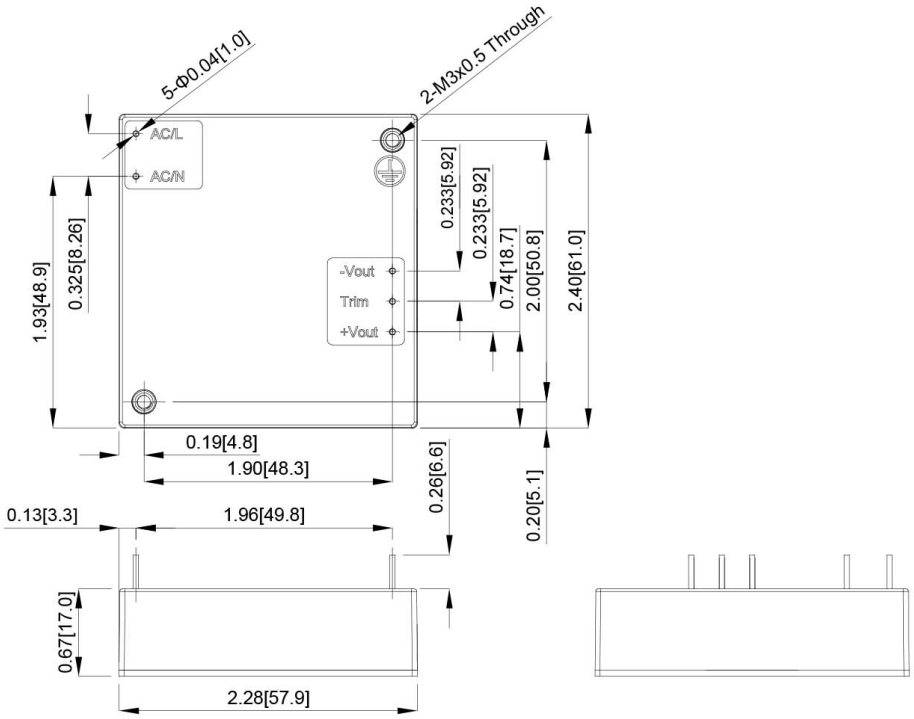

Downloaded from Arrow.com.

MECHANICAL DRAWING (CONTINUED)

HEATSINK VERSION

units: inch [mm]
tolerance: inches: x.xx = ±0.02, x.xxx = ±0.010
mm: x.x = ±0.5, x.xx = ±0.25

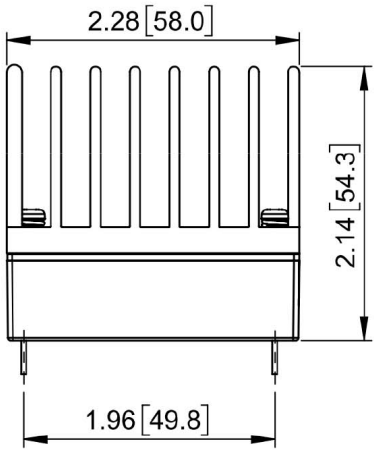

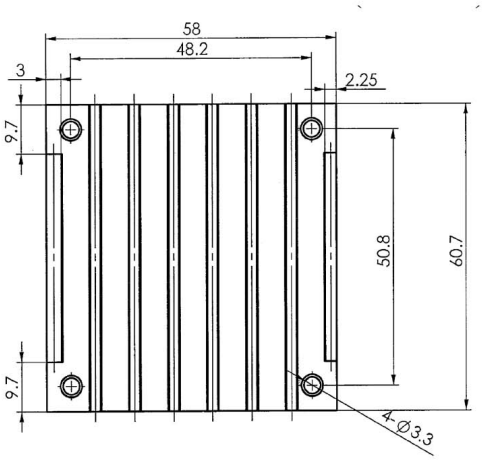

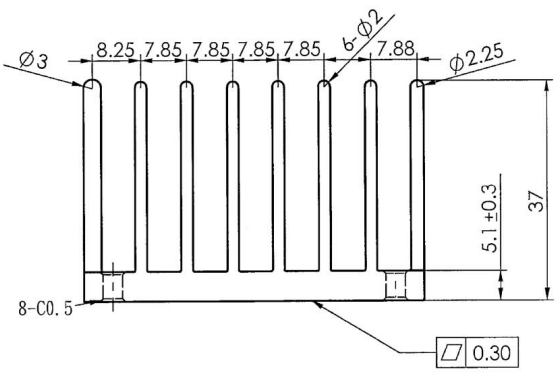

Downloaded from Arrow.com.

REVISION HISTORY

rev.	description	date
1.0	initial release	12/09/2021
1.01	input and environmental section updated	09/03/2025

The revision history provided is for informational purposes only and is believed to be accurate.

CUI INC
a bel group

15575 SW Sequoia Pkwy #100
Portland, OR 97224
800.275.4899

Fax 503.612.2383
Belfuse.com
powersupport@belf.com

CUI offers a two (2) year limited warranty. Complete warranty information is listed on our website.

CUI reserves the right to make changes to the product at any time without notice. Information provided by CUI is believed to be accurate and reliable. However, no responsibility is assumed by CUI for its use, nor for any infringements of patents or other rights of third parties which may result from its use.

CUI products are not authorized or warranted for use as critical components in equipment that requires an extremely high level of reliability. A critical component is any component of a life support device or system whose failure to perform can be reasonably expected to cause the failure of the life support device or system, or to affect its safety or effectiveness.

Downloaded from Arrow.com.