THIS DRAWING IS UNPUBLISHED. RELEASED FOR PUBLICATION 20
© COPYRIGHT 20 BY - ALL RIGHTS RESERVED.

REVISIONS

LTR	DESCRIPTION	DATE	DWN	APVD
A	RELEASE	03.MAR.'09	GC	JK
B	REVISED(ECR-14-008909)	21.OCT.'14	SJ	HG

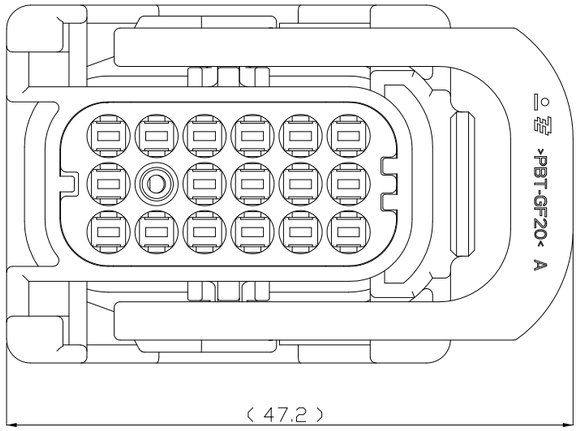

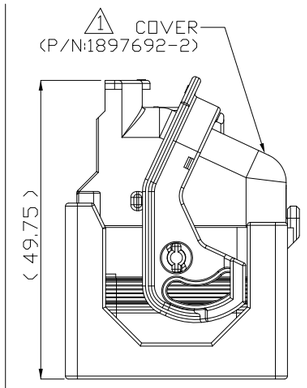

REC. HSG ASS'Y WITH COVER

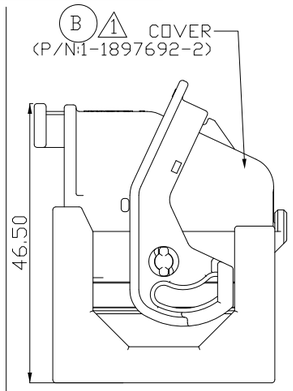

B REC. HSG ASS'Y WITH COVER

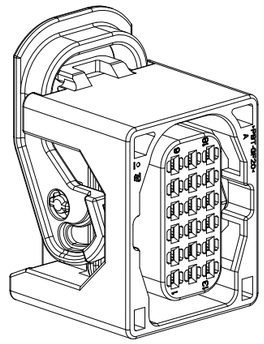

ISO VIEW

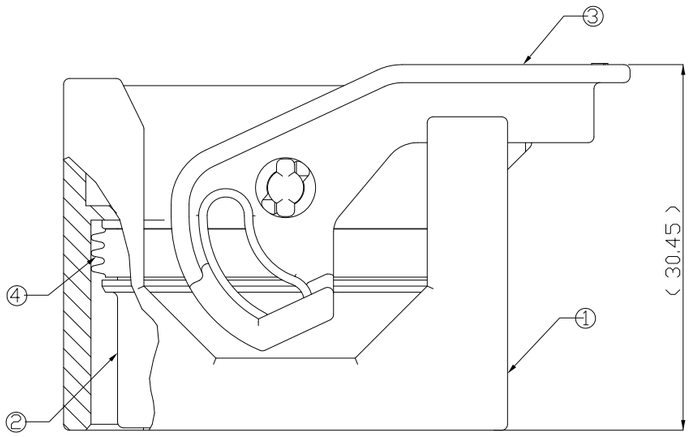

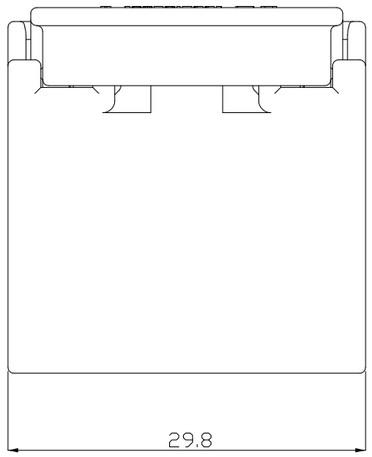

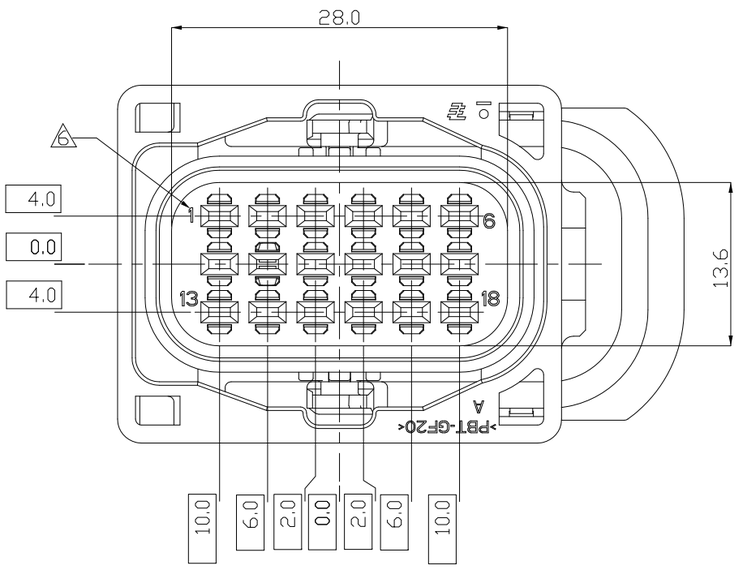

TABLE 1. APPLICABLE REC. CONTACT.

REC.	PART NO.	WIRE RANGE(mm²)	INSULATION DIA.(mm) (FLR)
MCP 1.5	1241378	0.2-0.35	1.1-1.4
	1241380	0.5-1.0	1.4-2.1
B	1418884	1.5	2.16-2.4

TABLE 2. APPLICABLE SINGLE WIRE SEALS

WIRE RANGE(mm²)	INSULATION DIA. (mm)	COLOR	PART NO.
0.35-0.50	1.2-1.6	RED	964971-1
0.50-0.75	1.4-1.9	GREY	963530-1
B 1.00-1.50	1.9-2.4	YELLOW	964972-1
	DEAD END PLUG	WHITE	963531-1

NOTE ;

1. THE COVER OF REC. HSG ASS'Y MUST BE ORDERED SEPARATELY.
2. APPLICABLE REC. CONTACT : SEE TABLE 1.
3. APPLICABLE SINGLE WIRE SEAL : SEE TABLE 2.
4. THE MATING TAB HSG ASS'Y P/N : 1897686-2
5. GENERAL TOLERANCE : ±0.3, ±3.0 °
6. CURCUIT NO.

REC. ASS'Y DESCRIPTION	1897688-2
ASS'Y P/N	

NO.	PART NO.	DESCRIPTION	MATERIAL	COLOR	Q'TY
4	2005886-1	INNER SEAL	SILICON	ORANGE	1
3	1897691-2	LEVER	PBT-GF20	BLACK	1
2	1897690-2	CAVITY PLUG HSG	PA6-GB20-GF10	BLACK	1
1	1897689-2	REC. HSG	PBT-GF20	BLACK	1

THIS DRAWING IS A CONTROLLED DOCUMENT.

DIMENSIONS: mm

TOLERANCES UNLESS OTHERWISE SPECIFIED
0 PLC ±-
1 PLC ±0.5
2 PLC ±0.13
3 PLC ±0.013
4 PLC ±0.0001
ANGLES ±-

MATERIAL – –
FINISH – –

DWN SJ CHOI –
CHK KT LIM –
APVD HG CHO –
PRODUCT SPEC –
APPLICATION SPEC –
WEIGHT –

TE Connectivity

NAME – MCP1.5 SEALED 18P REC. HSG ASS'Y –

SIZE	CAGE CODE	DRAWING NO	RESTRICTED TO
A3	00779	C-1897688	–

CUSTOMER DRAWING | SCALE 1:1 | SHEET 1 OF 1 | REV B

1470-19 (3/13)

Downloaded from Arrow.com.