OMRON

Sealed Tactile Switch

B3WN

Through-hole-mounting Switches with a Double-sealed Structure for High Resistance to Water and Dust. Available on Radial Tape

- Sealed construction conforming to IP67 (IEC-60529) provides high reliability in dusty or humid environments. (* Excluding the terminal section)
- As compact as 8 mm × 8 mm.
- Allows the use of radial-taping part insertion machines.

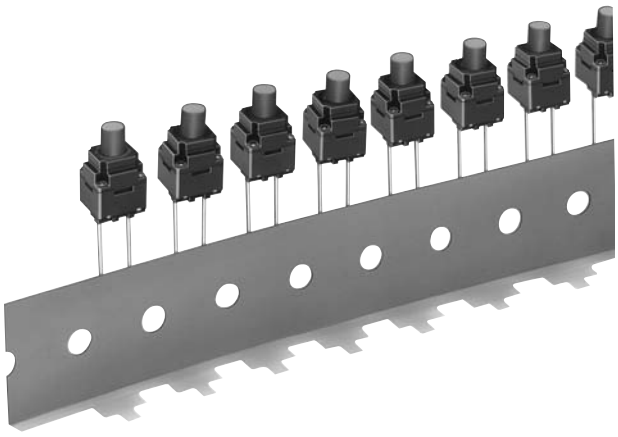

■ List of Models

8 × 8 mm Models

Type	Contact material	Height	Operating force (OF)	Plunger color	Taped Radial	
					Model without ground terminal	Minimum packing unit
B3WN	Silver plated	13 mm	1.96 N {200 gf}	Black	B3WN-6002(S)	1,000 pcs
			2.55 N {260 gf}		B3WN-6005	

Note: The switches are tape packaged in units of 1,000 per package. Order in multiples of the package size. Switches are not sold individually

■ Ratings/Characteristics

Rating (resistive load)	1 to 50 mA, 3 to 12 VDC
Minimum applicable load (reference value)	10 μA at 1 VDC (resistive load)
Ambient operating temperature	-25°C to +85°C at 60%RH max. (with no icing or condensation)
Ambient operating humidity	35% to 85% (at +5 to +35°C)
Contact form	SPST-NO
Contact resistance (initial value)	100 mΩ max.
Insulation resistance	100 MΩ min. (at 100 VDC with insulation tester)
Dielectric strength	250 VAC, 50/60Hz for 1 min
Bounce time	10 ms max.
Vibration resistance	Malfunction: 10 to 55 Hz, 1.5-mm double amplitude
Shock resistance	Destruction: 784 m/s^2 {approx. 80G} max. Malfunction: 100 m/s^2 {approx. 10G} max.
Durability	100,000 operations min.
Weight	Approx. 0.7 g
Degree of protection	IEC IP67
Washing	Possible

Downloaded from Arrow.com.

■ Operating Characteristics

Item	B3WN-6002(S)	B3WN-6005
Operating force (OF)	1.96±0.69 N {200±70 gf}	2.55±0.69 N {260 gf±70 gf}
Releasing force (RF)	0.49 N {50 gf} min.	
Pretravel (PT)	$0.3^{+0.2}_{-0.1}$ mm	

■ Model Structure

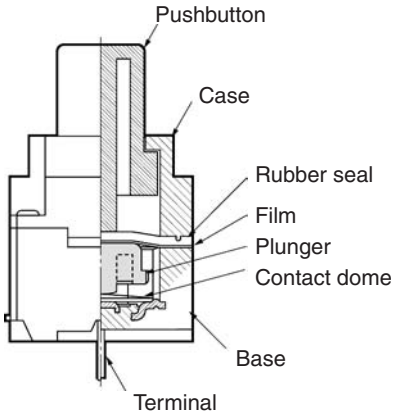

■ Dimensions (Unit: mm)

Note: The numbers used for terminals in the following graphics are indicated in the “Bottom View” diagram below. In this diagram, the Switch is rotated so that the terminals are on the right and left-hand sides, and the OMRON logo appears the right way up.



(Bottom View)

B3WN-6002 (S)
B3WN-6005

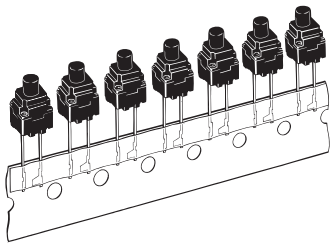

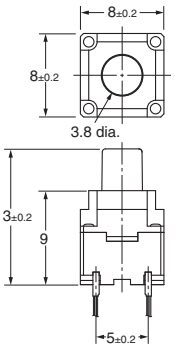

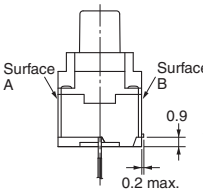

Note: The tape is random between surface A and surface B.

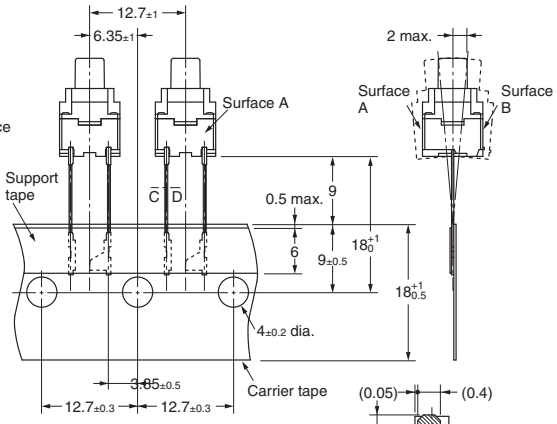

C-D Cross-sectional View

PCB Processing Dimensions
(Reference Only)
(Top View)
(PCB thickness, t=1.6)



Terminal Arrangement
/Internal Connections
(Top View)

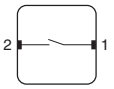

Note: Unless otherwise specified, a tolerance of ±0.4 mm applies to all dimensions. No terminal numbers are indicated on the Switches.

■ Precautions

Be sure to read the safety precautions common to all Tactile Switches on pages for correct use.

Downloaded from Arrow.com.

Please check each region's Terms & Conditions by region website.

OMRON Corporation
Device & Module Solutions Company

Regional Contact

Americas
https://components.omron.com/us

Europe
https://components.omron.com/eu

Asia-Pacific
https://components.omron.com/ap

China
https://components.omron.com.cn

Korea
https://components.omron.com/kr

Japan
https://components.omron.com/jp

© OMRON Corporation 2007-2022 All Rights Reserved.
In the interest of product improvement, specifications are subject to change without notice.

Cat. No. A112-E1-06
1122 (0207)

Downloaded from Arrow.com.