Alle Rechte vorbehalten/ *All rights reserved*

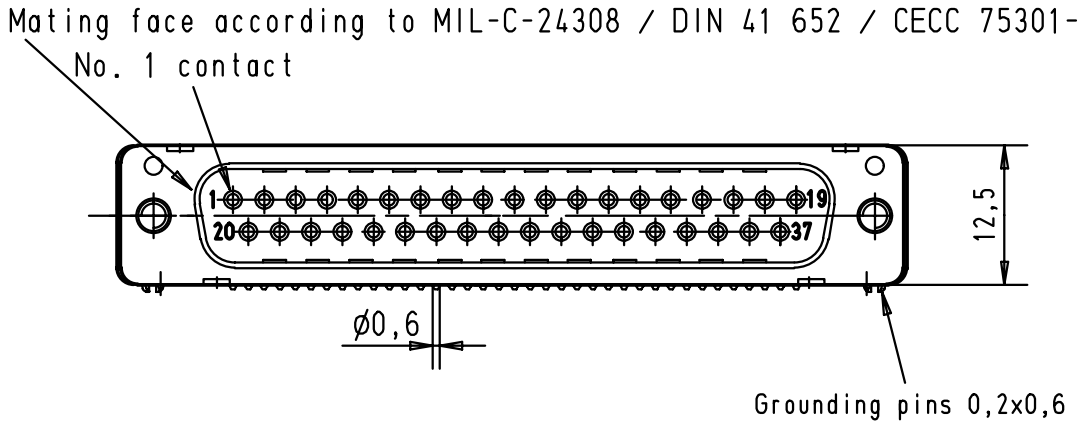

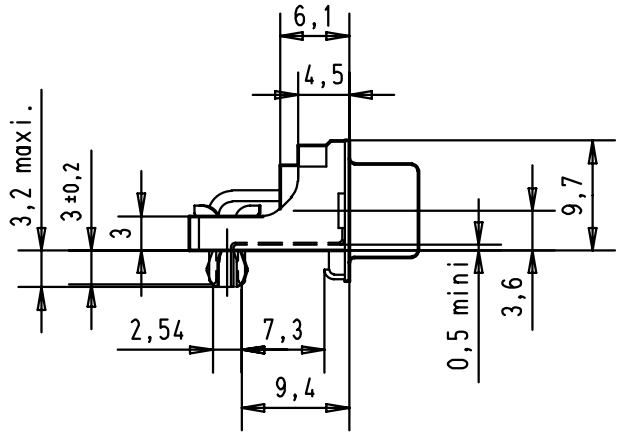

Printed board layout(1,6±0,2 thick)
View component side
(PCB plating = Tin)

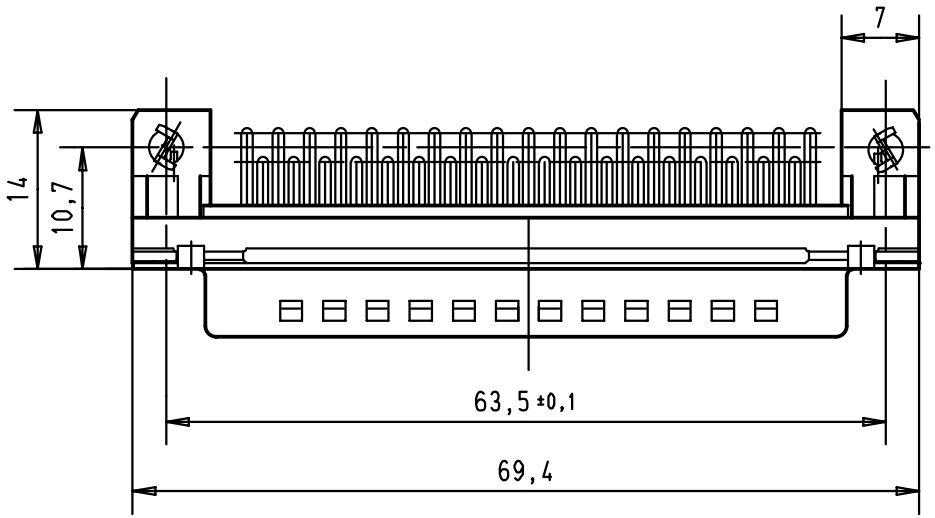

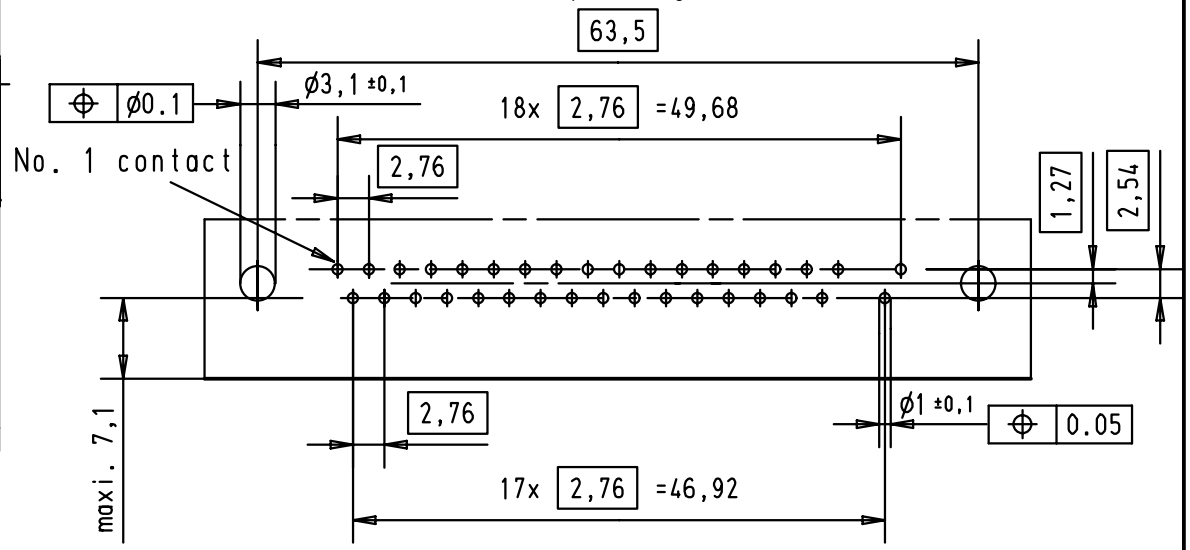

Mounting force on Printed board : 25 - 80 N

Part number	nut thread	Performance level	Mod.	Dat.	Name
09 66 462 6815	M3	2			
09 66 462 7815	M3	3			
09 66 462 5815	M3	0,76 µm Au			
09 66 462 6816	4-40 UNC	2			
09 66 462 7816	4-40 UNC	3			
09 66 462 5816	4-40 UNC	0,76 µm Au	29733	23-NOV-01	JB

	Dat.	Name
Detail.	23-NOV-01	JB
Insp.		
Stand.		

All Dim. in mm
Orig. Size DIN A 4

D-Sub male low profile
37 poles with solder pins,
nuts,board lock
and grounding pins

Maßstab/ *Scale* 1,5:1

HARTING EURL
F-95972 Paris

TB 09 66 462 X81x

Sub.

Blatt/ *Page* 4

Downloaded from Arrow.com.