Alle Rechte vorbehalten/ *All rights reserved*

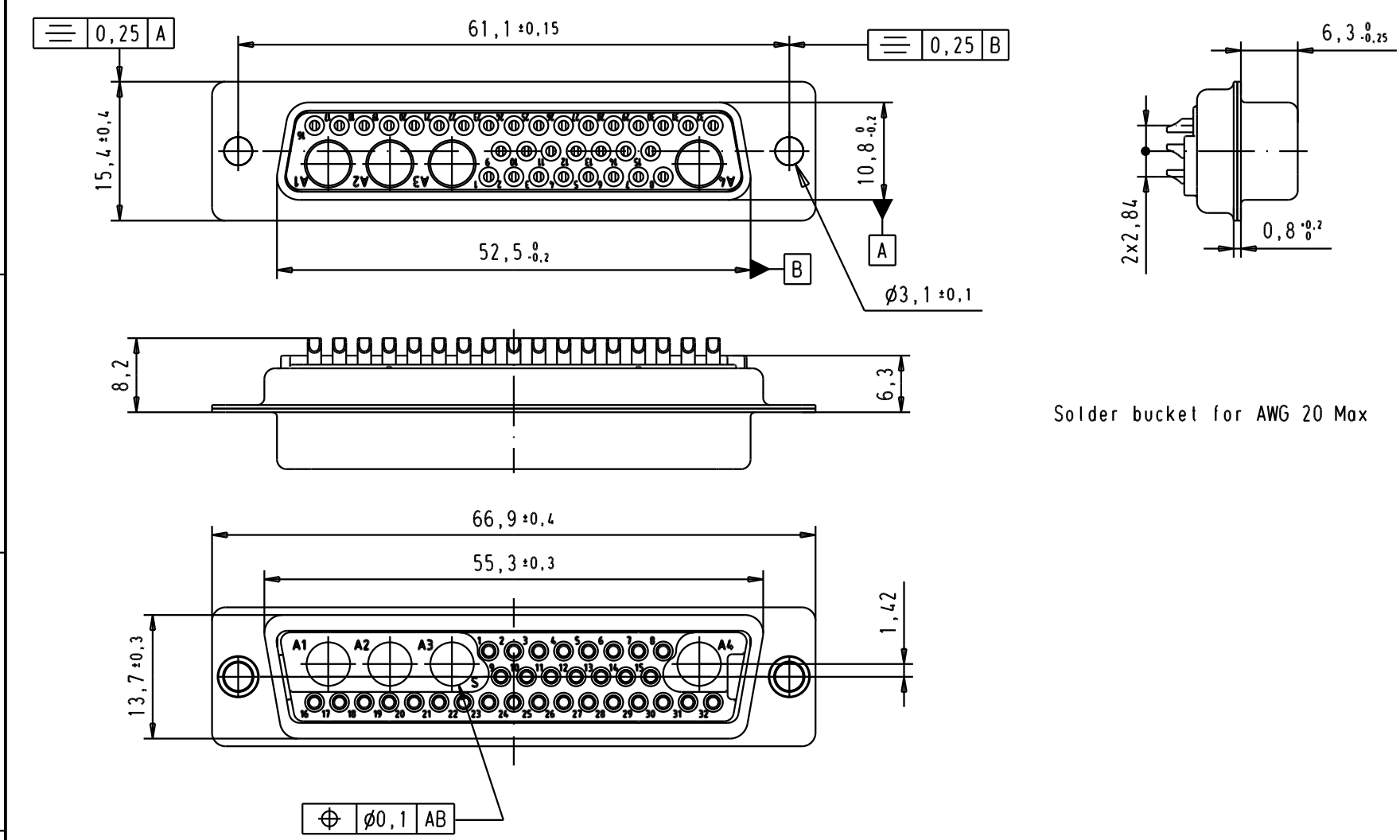

Solder bucket for AWG 20 Max

09 69 501 7364	PL3
09 69 501 5364	S4
part number	performance level

33100	15/09/05	JMDR
Mod.	Dat.	Name

	Dat.	Name
Detail.	15/09/05	JMDR
Insp.		
Stand.		

All Dim. in mm
Orig. Size DIN A 4

HARTING EURL
F-95972 Paris

D-sub, female, straight, 36W4 without power contact, solder bucket, tin plated shell with holes

Sub.

Maßstab/ *Scale* 1,5:1

TB 09 69 501 x364

Blatt/ *Page* 1/1

Downloaded from Arrow.com.