Low-Voltage CMOS Dual D-Type Flip-Flop

With 5 V-Tolerant Inputs

MC74LCX74

The MC74LCX74 is a high performance, dual D-type flip-flop with asynchronous clear and set inputs and complementary (O, $\overline{O}$) outputs. It operates from a 1.65 to 5.5 V supply. High impedance TTL compatible inputs significantly reduce current loading to input drivers while TTL compatible outputs offer improved switching noise performance. A V_I specification of 5.5 V allows MC74LCX74 inputs to be safely driven from 5.0 V devices.

The MC74LCX74 consists of 2 edge-triggered flip-flops with individual D-type inputs. The flip-flop will store the state of individual D inputs, that meet the setup and hold time requirements, on the LOW-to-HIGH Clock (CP) transition.

Features

- Designed for 1.65 V to 5.5 V V_{CC} Operation
- 5.0 V Tolerant Inputs – Interface Capability With 5.0 V TTL Logic
- LVTTL Compatible
- LVCMOS Compatible
- 24 mA Balanced Output Sink and Source Capability at V_{CC} = 3.0 V
- Near Zero Static Supply Current in All Three Logic States (10 μA) Substantially Reduces System Power Requirements
- Latchup Performance Exceeds 100 mA
- ESD Performance: Human Body Model >2000 V
- These Devices are Pb-Free, Halogen Free/BFR Free and are RoHS Compliant

MARKING DIAGRAMS

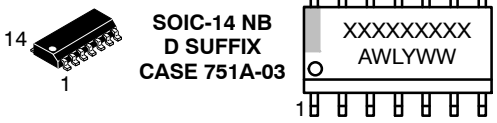

SOIC-14 NB
D SUFFIX
CASE 751A-03

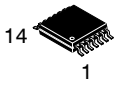

TSSOP-14
DT SUFFIX
CASE 948G

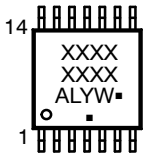

XXXXXX	= Specific Device Code
A	= Assembly Location
L, WL	= Wafer Lot
Y	= Year
W, WW	= Work Week
▪	= Pb-Free Package

(Note: Microdot may be in either location)

ORDERING INFORMATION

See detailed ordering and shipping information in the package dimensions section on page 8 of this data sheet.

© Semiconductor Components Industries, LLC, 2011

Downloaded from Arrow.com.

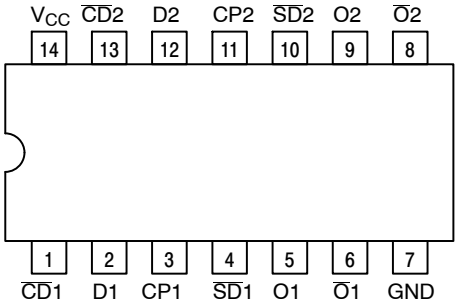

Figure 1. Pinout: 14-Lead (Top View)

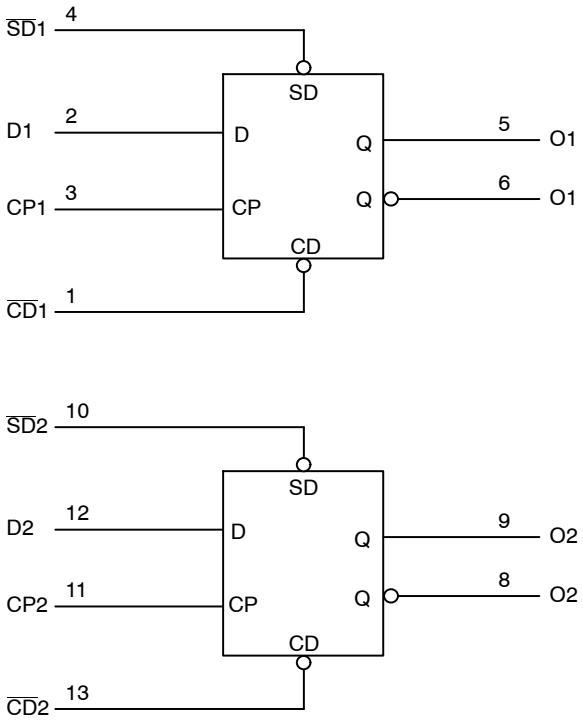

Figure 2. Logic Diagram

PIN NAMES

Pins	Function
CP1, CP2	Clock Pulse Inputs
D1–D2	Data Inputs
$\overline{CD1}$, $\overline{CD2}$	Direct Clear Inputs
$\overline{SD1}$, $\overline{SD2}$	Direct Set Inputs
On–$\overline{On}$	Outputs

TRUTH TABLE

Inputs				Outputs		
$\overline{SDn}$	$\overline{CDn}$	CPn	Dn	On	$\overline{On}$	Operating Mode
L	H	X	X	H	L	Asynchronous Set
H	L	X	X	L	H	Asynchronous Clear
L	L	X	X	H	H	Undetermined
H	H	↑	h	H	L	Load and Read Register
H	H	↑	l	L	H	
H	H	↥	X	NC	NC	Hold

H = High Voltage Level
h = High Voltage Level One Setup Time Prior to the Low-to-High Clock Transition
L = Low Voltage Level
l = Low Voltage Level One Setup Time Prior to the Low-to-High Clock Transition
NC = No Change
X = High or Low Voltage Level and Transitions are Acceptable
↑ = Low-to-High Transition
↥ = Not a Low-to-High Transition

For I_{CC} reasons, DO NOT FLOAT Inputs

Share Feedback
Your Opinion Matters

Downloaded from Arrow.com.

MAXIMUM RATINGS

Symbol	Parameter		Value	Unit
V_{CC}	DC Supply Voltage		−0.5 to +6.5	V
V_I	DC Input Voltage (Note 1)		−0.5 to +6.5	V
V_O	DC Output Voltage (Note 1)	Active-Mode (High or Low State)	−0.5 to V_{CC} + 0.5	V
		Tri-State Mode	−0.5 to +6.5	
		Power-Down Mode (V_{CC} = 0 V)	−0.5 to +6.5	
I_{IK}	DC Input Diode Current V_I < GND		−50	mA
I_{OK}	DC Output Diode Current V_O < GND		−50	mA
I_O	DC Output Source/Sink Current		±50	mA
I_{CC} or I_{GND}	DC Supply Current per Supply Pin or Ground Pin		±100	mA
T_{STG}	Storage Temperature Range		−65 to +150	°C
T_L	Lead Temperature, 1 mm from Case for 10 Seconds		260	°C
T_J	Junction Temperature under Bias		+150	°C
θ_{JA}	Thermal Resistance (Note 1)	SOIC-14 NB	116	°C/W
		TSSOP-14	150	
P_D	Power Dissipation in Still Air at 125 °C	SOIC-14 NB	116	mW
		TSSOP-14	833	
MSL	Moisture Sensitivity		Level 1	
F_R	Flammability Rating	Oxygen Index: 28 to 34	UL 94 V-0 @ 0.125 in	
V_{ESD}	ESD Withstand Voltage (Note 3)	Human Body Model	2000	V
		Charged Device Model	N/A	

Stresses exceeding those listed in the Maximum Ratings table may damage the device. If any of these limits are exceeded, device functionality should not be assumed, damage may occur and reliability may be affected.

1. I_O absolute maximum rating must be observed.
2. Measured with minimum pad spacing on an FR4 board, using 76 mm-by-114 mm, 2-ounce copper trace no air flow per JESD51-7.
3. HBM tested to EIA / JESD22-A114-A. CDM tested to JESD22-C101-A. JEDEC recommends that ESD qualification to EIA/JESD22-A115A (Machine Model) be discontinued.

RECOMMENDED OPERATING CONDITIONS

Symbol	Parameter		Min	Typ	Max	Unit
V_{CC}	Supply Voltage	Operating	1.65	2.5, 3.3	5.5	V
		Data Retention Only	1.5	2.5, 3.3	5.5	
V_I	Digital Input Voltage		0		5.5	V
V_O	Output Voltage	Active Mode (High or Low State)	0		V_{CC}	V
		Tri-State Mode	0		5.5	
		Power Down Mode (V_{CC} = 0 V)	0		5.5	
T_A	Operating Free-Air Temperature		−40		+125	°C
t_r, t_f	Input Rise or Fall Rate	V_{CC} = 1.65 V to 1.95 V	0		20	nS/V
		V_{CC} = 2.3 V to 2.7 V	0		20	
		V_{IN} from 0.8 V to 2.0 V, V_{CC} = 3.0 V	0		10	
		V_{CC} = 4.5 V to 5.5 V	0		5	

Functional operation above the stresses listed in the Recommended Operating Ranges is not implied. Extended exposure to stresses beyond the Recommended Operating Ranges limits may affect device reliability.

4. Unused inputs must always be tied to an appropriate logic voltage level (e.g., either GND or V_{CC}). Unused outputs must be left open.

Share Feedback
Your Opinion Matters

Downloaded from Arrow.com.

DC ELECTRICAL CHARACTERISTICS

Symbol	Parameter	Conditions	V_{CC} (V)	T_A = −40 °C to +85 °C		T_A = −40 °C to +125 °C		Unit
				Min	Max	Min	Max	
V_{IH}	HIGH Level Input Voltage		1.65 – 1.95	0.65 x V_{CC}		0.65 x V_{CC}		V
			2.3 – 2.7	1.7		1.7		
			3.0 – 3.6	2.0		2.0		
			4.5 – 5.5	0.70 x V_{CC}		0.70 x V_{CC}		
V_{IL}	LOW Level Input Voltage		1.65 – 1.95		0.35 x V_{CC}		0.35 x V_{CC}	V
			2.3 – 2.7		0.7		0.7	
			3.0 – 3.6		0.8		0.8	
			4.5 – 5.5		0.30 x V_{CC}		0.30 x V_{CC}	
V_{OH}	High-Level Output Voltage	V_I = V_{IH} or V_{IL}						V
		I_{OH} = −100 μA	1.65 to 5.5	V_{CC} – 0.1		V_{CC} – 0.1		
		I_{OH} = −4 mA	1.65	1.29		1.29		
		I_{OH} = −8 mA	2.3	1.8		1.8		
		I_{OH} = −12 mA	2.7	2.2		2.2		
		I_{OH} = −16 mA	3.0	2.4		2.4		
		I_{OH} = −24 mA	3.0	2.2		2.2		
		I_{OH} = −32 mA	4.5	3.7		3.7		
V_{OL}	Low-Level Output Voltage	V_I = V_{IH} or V_{IL}						V
		I_{OL} = 100 μA	1.65 to 5.5		0.1		0.1	
		I_{OL} = 4 mA	1.65		0.24		0.24	
		I_{OL} = 8 mA	2.3		0.3		0.3	
		I_{OL} = 12 mA	2.7		0.4		0.4	
		I_{OL} = 16 mA	3.0		0.4		0.4	
		I_{OL} = 24 mA	3.0		0.55		0.55	
		I_{OL} = 32 mA	4.5		0.6		0.6	
I_I	Input Leakage Current	V_I = 0 to 5.5 V	3.6		±5.0		±5.0	μA
I_{OFF}	Power Off Leakage Current	V_I = 5.5 V or V_O = 5.5 V	0		10		10	μA
I_{CC}	Quiescent Supply Current	V_I = 5.5 V or GND	3.6		10		10	μA
ΔI_{CC}	Increase in I_{CC} per Input	V_{IH} = V_{CC} – 0.6 V	2.3 to 3.6		500		500	μA

AC ELECTRICAL CHARACTERISTICS

Symbol	Parameter	Test Condition	V_{CC} (V)	T_A = −40 °C to +85 °C		T_A = −40 °C to +125 °C		Unit
				Min	Max	Min	Max	
t_{PLH}, t_{PHL}	Propagation Delay, CPn to (On or $\overline{On}$)	Waveform 1	1.65 to 1.95		12.5		12.5	ns
			2.3 to 2.7		8.4		8.4	
			2.7		8.0		8.0	
			3.0 to 3.6		7.0		7.0	
			4.5 to 5.5		5.0		5.0	
t_{PLH}, t_{PHL}	Propagation Delay, ($\overline{SDn}$ or $\overline{CDn}$) to (On or $\overline{On}$)	Waveform 2	1.65 to 1.95		12.5		12.5	ns
			2.3 to 2.7		8.4		8.4	
			2.7		8.0		8.0	
			3.0 to 3.6		7.0		7.0	
			4.5 to 5.5		5.0		5.0	

Share Feedback
Your Opinion Matters

Downloaded from Arrow.com.

AC ELECTRICAL CHARACTERISTICS (continued)

Symbol	Parameter	Test Condition	V_{CC} (V)	T_A = −40 °C to +85 °C		T_A = −40 °C to +125 °C		Unit
				Min	Max	Min	Max	
f_{max}	Clock Pulse Frequency	Waveform 1	1.65 to 1.95	90		90		MHz
			2.3 to 2.7	150		150		
			2.7	150		150		
			3.0 to 3.6	150		150		
			4.5 to 5.5	150		150		
t_s	Setup Time, HIGH or LOW Dn to CPn	Waveform 1	1.65 to 1.95	4.0		4.0		ns
			2.3 to 2.7	4.0		4.0		
			2.7	2.5		2.5		
			3.0 to 3.6	2.5		2.5		
			4.5 to 5.5	2.5		2.5		
t_h	Hold Time, HIGH or LOW Dn to CPn	Waveform 1	1.65 to 1.95	2.0		2.0		ns
			2.3 to 2.7	2.0		2.0		
			2.7	1.5		1.5		
			3.0 to 3.6	1.5		1.5		
			4.5 to 5.5	1.5		1.5		
t_W	Pulse Width, CPn HIGH or LOW	Waveform 4	1.65 to 1.95	4.0		4.0		ns
			2.3 to 2.7	4.0		4.0		
			2.7	3.3		3.3		
			3.0 to 3.6	3.3		3.3		
			4.5 to 5.5	3.3		3.3		
	Pulse Width, $\overline{SD}$n or $\overline{CD}$n LOW	Waveform 4	1.65 to 1.95	4.0		4.0		ns
			2.3 to 2.7	4.0		4.0		
			2.7	3.6		3.6		
			3.0 to 3.6	3.3		3.3		
			4.5 to 5.5	3.3		3.3		
t_{rec}	Recovery Time, $\overline{SD}$n or $\overline{CD}$n TO CPn	Waveform 3	1.65 to 1.95	4.5		4.5		ns
			2.3 to 2.7	4.5		4.5		
			2.7	3.0		3.0		
			3.0 to 3.6	2.5		2.5		
			4.5 to 5.5	2.5		2.5		
t_{OSHL}, t_{OSLH}	Output to Output Skew		1.65 to 1.95					ns
			2.3 to 2.7					
			2.7					
			3.0 to 3.6		1.0		1.0	
			4.5 to 5.5					

5. Skew is defined as the absolute value of the difference between the actual propagation delay for any two separate outputs of the same device. The specification applies to any outputs switching in the same direction, either HIGH-to-LOW (t_{OSHL}) or LOW-to-HIGH (t_{OSLH}); parameter guaranteed by design.

Share Feedback
Your Opinion Matters

Downloaded from Arrow.com.

DYNAMIC SWITCHING CHARACTERISTICS

Symbol	Characteristic	Condition	T_A = +25 °C			Units
			Min	Typ	Max	
V_{OLP}	Dynamic LOW Peak Voltage (Note 6)	V_{CC} = 3.3 V, C_L = 50 pF, V_{IH} = 3.3 V, V_{IL} = 0 V V_{CC} = 2.5 V, C_L = 30 pF, V_{IH} = 2.5 V, V_{IL} = 0 V		0.8 0.6		V V
V_{OLV}	Dynamic LOW Valley Voltage (Note 6)	V_{CC} = 3.3 V, C_L = 50 pF, V_{IH} = 3.3 V, V_{IL} = 0 V V_{CC} = 2.5 V, C_L = 30 pF, V_{IH} = 2.5 V, V_{IL} = 0 V		−0.8 −0.6		V V

6. Number of outputs defined as “n”. Measured with “n-1” outputs switching from HIGH-to-LOW or LOW-to-HIGH. The remaining output is measured in the LOW state.

CAPACITIVE CHARACTERISTICS

Symbol	Parameter	Condition	Typical	Units
C_{IN}	Input Capacitance	V_{CC} = 3.3 V, V_I = 0 V or V_{CC}	7	pF
C_{OUT}	Output Capacitance	V_{CC} = 3.3 V, V_I = 0 V or V_{CC}	8	pF
C_{PD}	Power Dissipation Capacitance	10 MHz, V_{CC} = 3.3 V, V_I = 0 V or V_{CC}	25	pF

Share Feedback
Your Opinion Matters

Downloaded from Arrow.com.

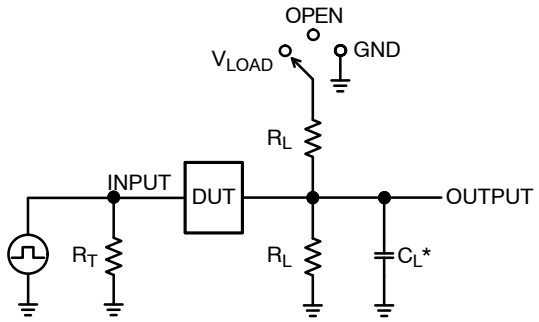

Test	Switch Position
t_{PLH} / t_{PHL}	Open
t_{PLZ} / t_{PZL}	V_{LOAD}
t_{PHZ} / t_{PZH}	GND

C_L includes probe and jig capacitance
R_T is Z_{OUT} of pulse generator (typically 50 Ω)
f = 1 MHz, t_W = 500 ns

Figure 3. Test Circuit

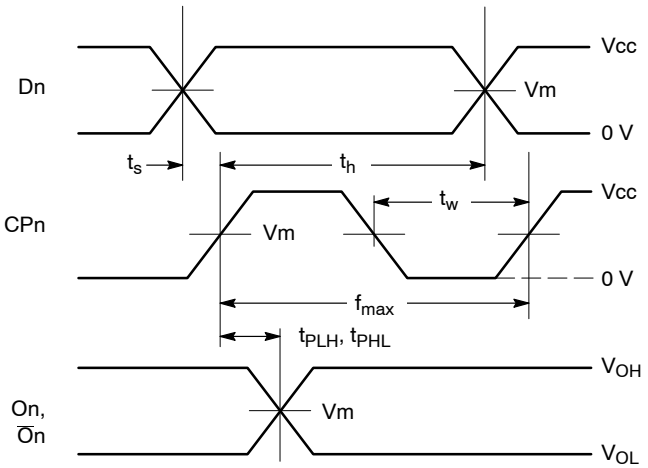

WAVEFORM 1 – PROPAGATION DELAYS, SETUP AND HOLD TIMES
t_R = t_F = 2.5 ns, 10% to 90%; f = 1 MHz; t_W = 500 ns

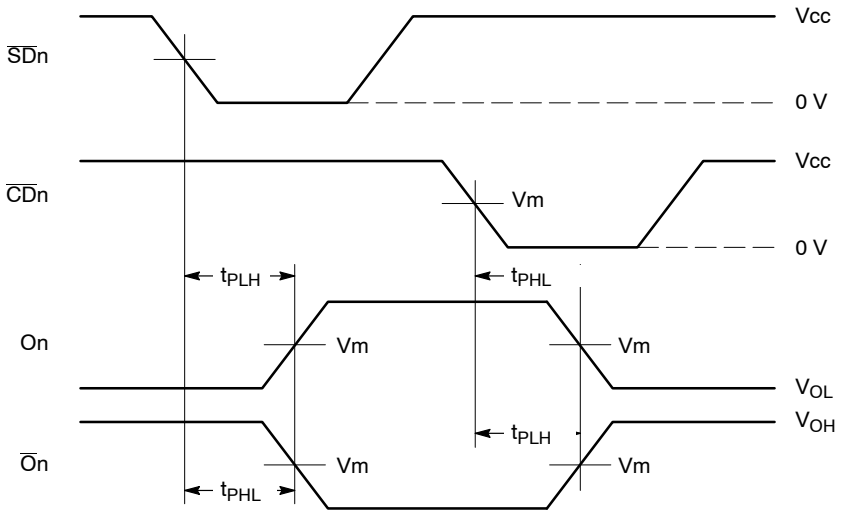

WAVEFORM 2 – PROPAGATION DELAYS
t_R = t_F = 2.5 ns, 10% to 90%; f = 1 MHz; t_W = 500 ns

Figure 4. AC Waveforms

Share Feedback
Your Opinion Matters

Downloaded from Arrow.com.

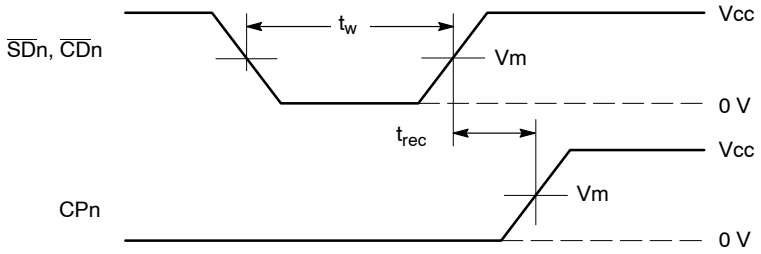

WAVEFORM 3 – RECOVERY TIME
$t_R = t_F$ = 2.5 ns from 10% to 90%; f = 1 MHz; t_w = 500 ns

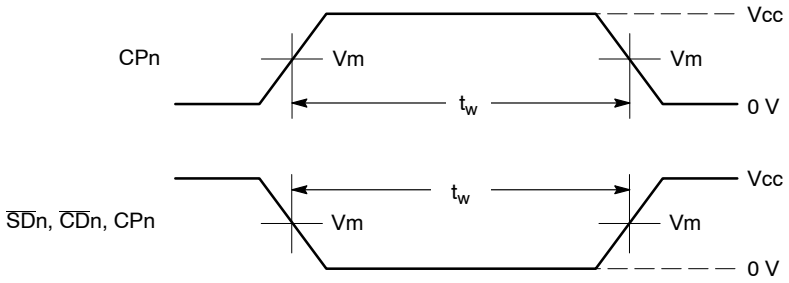

WAVEFORM 4 – PULSE WIDTH
$t_R = t_F$ = 2.5 ns (or fast as required) from 10% to 90%;
Output requirements: $V_{OL} \leq 0.8$ V, $V_{OH} \geq 2.0$ V

V_{CC}, V	R_L, Ω	C_L, pF	V_{LOAD}	V_m, V	V_Y, V
1.65 to 1.95	500	30	2 x V_{CC}	V_{CC} / 2	0.15
2.3 to 2.7	500	30	2 x V_{CC}	V_{CC} / 2	0.15
2.7	500	50	6 V	1.5	0.3
3.0 to 3.6	500	50	6 V	1.5	0.3
4.5 to 5.5	500	50	2 x V_{CC}	V_{CC} / 2	0.3

Figure 4. AC Waveforms (Continued)

ORDERING INFORMATION

Device	Marking	Package	Shipping†
MC74LCX74DG	LCX74G	SOIC-14 NB (Pb-Free, Halide Free)	55 Units / Rail
MC74LCX74DR2G	LCX74G	SOIC-14 NB (Pb-Free, Halide Free)	2500 / Tape & Reel
MC74LCX74DTG	LCX 74	TSSOP-14 (Pb-Free, Halide Free)	96 Units / Rail
MC74LCX74DTR2G	LCX 74	TSSOP-14 (Pb-Free, Halide Free)	2500 / Tape & Reel

†For information on tape and reel specifications, including part orientation and tape sizes, please refer to our Tape and Reel Packaging Specifications Brochure, BRD8011/D.
*–Q Suffix for Automotive and Other Applications Requiring Unique Site and Control Change Requirements; AEC-Q100 Qualified and PPAP Capable.

Share Feedback
Your Opinion Matters

Downloaded from Arrow.com.

REVISION HISTORY

Revision	Description of Changes	Date
10	Edits to the package name labels.	10/26/2026

This document has undergone updates prior to the inclusion of this revision history table. The changes tracked here only reflect updates made on the noted approval dates.

Share Feedback
Your Opinion Matters

Downloaded from Arrow.com.

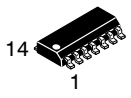

SCALE 1:1

SOIC−14 NB
CASE 751A−03
ISSUE L

DATE 03 FEB 2016

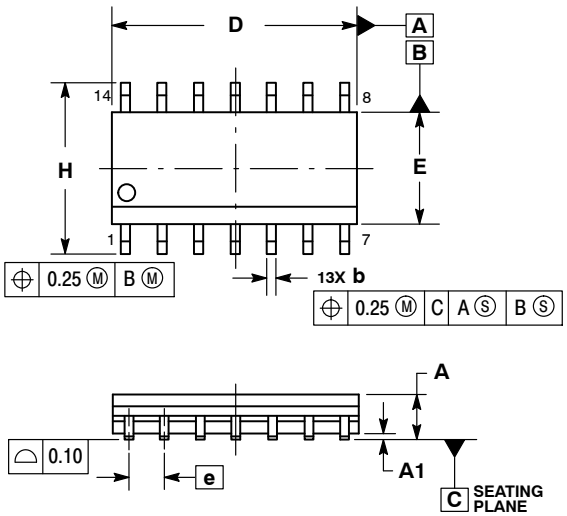

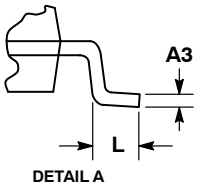

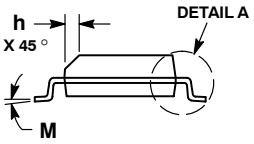

NOTES:
1. DIMENSIONING AND TOLERANCING PER ASME Y14.5M, 1994.
2. CONTROLLING DIMENSION: MILLIMETERS.
3. DIMENSION b DOES NOT INCLUDE DAMBAR PROTRUSION. ALLOWABLE PROTRUSION SHALL BE 0.13 TOTAL IN EXCESS OF AT MAXIMUM MATERIAL CONDITION.
4. DIMENSIONS D AND E DO NOT INCLUDE MOLD PROTRUSIONS.
5. MAXIMUM MOLD PROTRUSION 0.15 PER SIDE.

	MILLIMETERS		INCHES	
DIM	MIN	MAX	MIN	MAX
A	1.35	1.75	0.054	0.068
A1	0.10	0.25	0.004	0.010
A3	0.19	0.25	0.008	0.010
b	0.35	0.49	0.014	0.019
D	8.55	8.75	0.337	0.344
E	3.80	4.00	0.150	0.157
e	1.27 BSC		0.050 BSC	
H	5.80	6.20	0.228	0.244
h	0.25	0.50	0.010	0.019
L	0.40	1.25	0.016	0.049
M	0 °	7 °	0 °	7 °

SOLDERING FOOTPRINT*

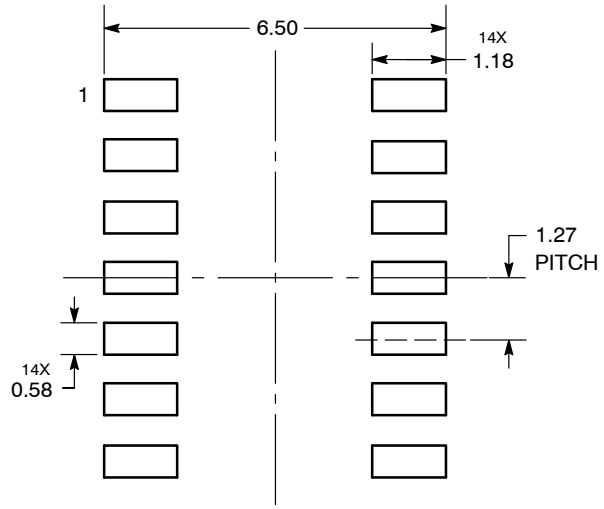

DIMENSIONS: MILLIMETERS

*For additional information on our Pb−Free strategy and soldering details, please download the **onsemi** Soldering and Mounting Techniques Reference Manual, SOLDERRM/D.

GENERIC MARKING DIAGRAM*

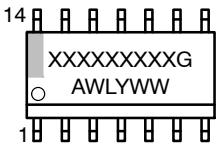

XXXXX = Specific Device Code
A = Assembly Location
WL = Wafer Lot
Y = Year
WW = Work Week
G = Pb−Free Package

*This information is generic. Please refer to device data sheet for actual part marking. Pb−Free indicator, “G” or microdot “▪”, may or may not be present. Some products may not follow the Generic Marking.

STYLES ON PAGE 2

DOCUMENT NUMBER:	**98ASB42565B**	Electronic versions are uncontrolled except when accessed directly from the Document Repository. Printed versions are uncontrolled except when stamped “CONTROLLED COPY” in red.
DESCRIPTION:	**SOIC−14 NB**	**PAGE 1 OF 2**

onsemi and onsemi are trademarks of Semiconductor Components Industries, LLC dba **onsemi** or its subsidiaries in the United States and/or other countries. **onsemi** reserves the right to make changes without further notice to any products herein. **onsemi** makes no warranty, representation or guarantee regarding the suitability of its products for any particular purpose, nor does **onsemi** assume any liability arising out of the application or use of any product or circuit, and specifically disclaims any and all liability, including without limitation special, consequential or incidental damages. **onsemi** does not convey any license under its patent rights nor the rights of others.

Downloaded from Arrow.com.

SOIC−14
CASE 751A−03
ISSUE L

DATE 03 FEB 2016

STYLE 1:
PIN 1. COMMON CATHODE
2. ANODE/CATHODE
3. ANODE/CATHODE
4. NO CONNECTION
5. ANODE/CATHODE
6. NO CONNECTION
7. ANODE/CATHODE
8. ANODE/CATHODE
9. ANODE/CATHODE
10. NO CONNECTION
11. ANODE/CATHODE
12. ANODE/CATHODE
13. NO CONNECTION
14. COMMON ANODE

STYLE 2:
CANCELLED

STYLE 3:
PIN 1. NO CONNECTION
2. ANODE
3. ANODE
4. NO CONNECTION
5. ANODE
6. NO CONNECTION
7. ANODE
8. ANODE
9. ANODE
10. NO CONNECTION
11. ANODE
12. ANODE
13. NO CONNECTION
14. COMMON CATHODE

STYLE 4:
PIN 1. NO CONNECTION
2. CATHODE
3. CATHODE
4. NO CONNECTION
5. CATHODE
6. NO CONNECTION
7. CATHODE
8. CATHODE
9. CATHODE
10. NO CONNECTION
11. CATHODE
12. CATHODE
13. NO CONNECTION
14. COMMON ANODE

STYLE 5:
PIN 1. COMMON CATHODE
2. ANODE/CATHODE
3. ANODE/CATHODE
4. ANODE/CATHODE
5. ANODE/CATHODE
6. NO CONNECTION
7. COMMON ANODE
8. COMMON CATHODE
9. ANODE/CATHODE
10. ANODE/CATHODE
11. ANODE/CATHODE
12. ANODE/CATHODE
13. NO CONNECTION
14. COMMON ANODE

STYLE 6:
PIN 1. CATHODE
2. CATHODE
3. CATHODE
4. CATHODE
5. CATHODE
6. CATHODE
7. CATHODE
8. ANODE
9. ANODE
10. ANODE
11. ANODE
12. ANODE
13. ANODE
14. ANODE

STYLE 7:
PIN 1. ANODE/CATHODE
2. COMMON ANODE
3. COMMON CATHODE
4. ANODE/CATHODE
5. ANODE/CATHODE
6. ANODE/CATHODE
7. ANODE/CATHODE
8. ANODE/CATHODE
9. ANODE/CATHODE
10. ANODE/CATHODE
11. COMMON CATHODE
12. COMMON ANODE
13. ANODE/CATHODE
14. ANODE/CATHODE

STYLE 8:
PIN 1. COMMON CATHODE
2. ANODE/CATHODE
3. ANODE/CATHODE
4. NO CONNECTION
5. ANODE/CATHODE
6. ANODE/CATHODE
7. COMMON ANODE
8. COMMON ANODE
9. ANODE/CATHODE
10. ANODE/CATHODE
11. NO CONNECTION
12. ANODE/CATHODE
13. ANODE/CATHODE
14. COMMON CATHODE

onsemi and ONSEMI are trademarks of Semiconductor Components Industries, LLC dba **onsemi** or its subsidiaries in the United States and/or other countries. **onsemi** reserves the right to make changes without further notice to any products herein. **onsemi** makes no warranty, representation or guarantee regarding the suitability of its products for any particular purpose, nor does **onsemi** assume any liability arising out of the application or use of any product or circuit, and specifically disclaims any and all liability, including without limitation special, consequential or incidental damages. **onsemi** does not convey any license under its patent rights nor the rights of others.

© Semiconductor Components Industries, LLC, 2019

Downloaded from Arrow.com.

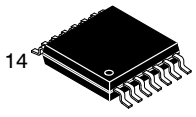

TSSOP−14 5.00x4.40x0.95, 0.65P
CASE 948G
ISSUE D

DATE 30 JUN 2026

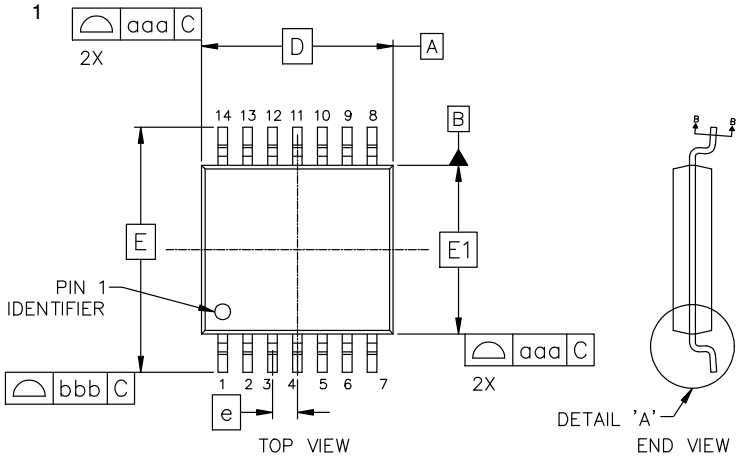

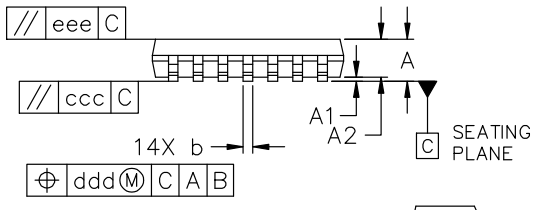

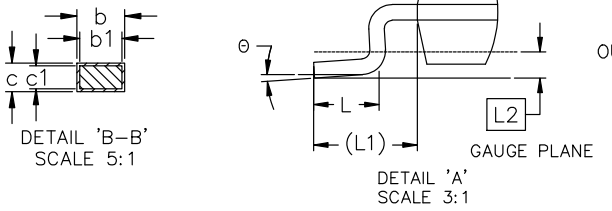

MILLIMETERS			
DIM	MIN	NOM	MAX
A	−−−	−−−	1.20
A1	0.05	0.10	0.15
A2	0.85	0.95	1.05
b	0.19	0.25	0.30
b1	0.19	0.22	0.25
c	0.09	0.15	0.20
c1	0.09	0.12	0.16
D	5.00 BSC		
E	6.40 BSC		
E1	4.40 BSC		
e	0.65 BSC		
L	0.50	0.63	0.75
L1	1.00 REF		
L2	0.25 BSC		
θ	0°	4°	8°
TOLERANCE FORM & POSITION			
aaa	0.10		
bbb	0.15		
ccc	0.08		
ddd	0.10		
eee	0.10		

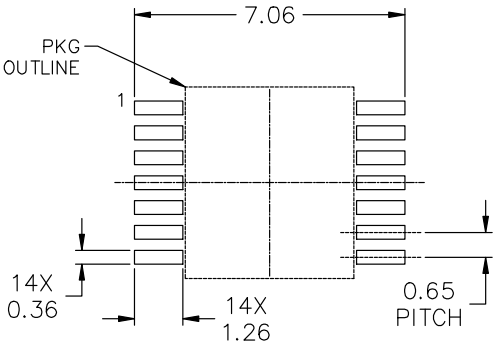

RECOMMENDED MOUNTING FOOTPRINT

*For additional information on our Pb−Free strategy and soldering details, please download the onsemi Soldering and Mounting Techniques Reference Manual, SOLDERRM/D.

NOTES:
1. DIMENSIONING AND TOLERANCING AS PER ASME Y14.5M, 2018.
2. CONTROLLING DIMENSION: MILLIMETER.
3. DIMENSION D DOES NOT INCLIDE MOLD FLASH, PROTRUSIONS OR GATE BURRS. MOLD FLASH OR GATE BURRS SHALL NOT EXCEED 0.15 PER SIDE.
4. DIMENSION E1 DOES NOT INCLUDE INTERLEAD FLASH OR PROTRUSION. INTERLEAD FLASH OR PROTRUSION SHALL NOT EXCEED 0.25 PER SIDE.
5. DIMENSION b DOES NOT INCLUDE DAMBAR PROTRUSION. ALLOWABLE DAMBAR PROTRUSION SHALL BE 0.08 TOTAL IN EXCESS OF THE b DIMENSION AT MAXIMUM MATERIAL CONDITION.
6. TERMINAL NUMBERS ARE SHOWN FOR REFERENCE ONLY.

GENERIC MARKING DIAGRAM*

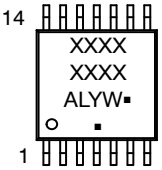

A = Assembly Location
L = Wafer Lot
Y = Year
W = Work Week
▪ = Pb−Free Package
(Note: Microdot may be in either location)

*This information is generic. Please refer to device data sheet for actual part marking. Pb−Free indicator, "G" or microdot "▪", may or may not be present. Some products may not follow the Generic Marking.

DOCUMENT NUMBER:	98ASH70246A	Electronic versions are uncontrolled except when accessed directly from the Document Repository. Printed versions are uncontrolled except when stamped "CONTROLLED COPY" in red.
DESCRIPTION:	TSSOP−14 5.00x4.40x0.95, 0.65P	PAGE 1 OF 1

onsemi and onsemi are trademarks of Semiconductor Components Industries, LLC dba **onsemi** or its subsidiaries in the United States and/or other countries. **onsemi** reserves the right to make changes without further notice to any products herein. **onsemi** makes no warranty, representation or guarantee regarding the suitability of its products for any particular purpose, nor does **onsemi** assume any liability arising out of the application or use of any product or circuit, and specifically disclaims any and all liability, including without limitation special, consequential or incidental damages. **onsemi** does not convey any license under its patent rights nor the rights of others.

Downloaded from Arrow.com.

onsemi, ONSEMI , and other names, marks, and brands are registered and/or common law trademarks of Semiconductor Components Industries, LLC dba "**onsemi**" or its affiliates and/or subsidiaries in the United States and/or other countries. **onsemi** owns the rights to a number of patents, trademarks, copyrights, trade secrets, and other intellectual property. A listing of **onsemi**'s product/patent coverage may be accessed at www.onsemi.com/site/pdf/Patent−Marking.pdf. **onsemi** reserves the right to make changes at any time to any products or information herein, without notice. The information herein is provided "as−is" and **onsemi** makes no warranty, representation or guarantee regarding the accuracy of the information, product features, availability, functionality, or suitability of its products for any particular purpose, nor does **onsemi** assume any liability arising out of the application or use of any product or circuit, and specifically disclaims any and all liability, including without limitation special, consequential or incidental damages. Buyer is responsible for its products and applications using **onsemi** products, including compliance with all laws, regulations and safety requirements or standards, regardless of any support or applications information provided by **onsemi**. "Typical" parameters which may be provided in **onsemi** data sheets and/or specifications can and do vary in different applications and actual performance may vary over time. All operating parameters, including "Typicals" must be validated for each customer application by customer's technical experts. **onsemi** does not convey any license under any of its intellectual property rights nor the rights of others. **onsemi** products are not designed, intended, or authorized for use as a critical component in life support systems or any FDA Class 3 medical devices or medical devices with a same or similar classification in a foreign jurisdiction or any devices intended for implantation in the human body. Should Buyer purchase or use **onsemi** products for any such unintended or unauthorized application, Buyer shall indemnify and hold **onsemi** and its officers, employees, subsidiaries, affiliates, and distributors harmless against all claims, costs, damages, and expenses, and reasonable attorney fees arising out of, directly or indirectly, any claim of personal injury or death associated with such unintended or unauthorized use, even if such claim alleges that **onsemi** was negligent regarding the design or manufacture of the part. **onsemi** is an Equal Opportunity/Affirmative Action Employer. This literature is subject to all applicable copyright laws and is not for resale in any manner.

ADDITIONAL INFORMATION

TECHNICAL PUBLICATIONS:
Technical Library: www.onsemi.com/design/resources/technical−documentation
onsemi Website: www.onsemi.com

ONLINE SUPPORT: www.onsemi.com/support
For additional information, please contact your local Sales Representative at www.onsemi.com/support/sales

◊

Downloaded from Arrow.com.