MICRO SWITCH
A DIVISION OF MINNEAPOLIS-HONEYWELL REGULATOR COMPANY
FREEPORT, ILLINOIS
FED. MFR. CODE 91929

SWITCH — BASIC

CATALOG LISTING
MT-4RL2

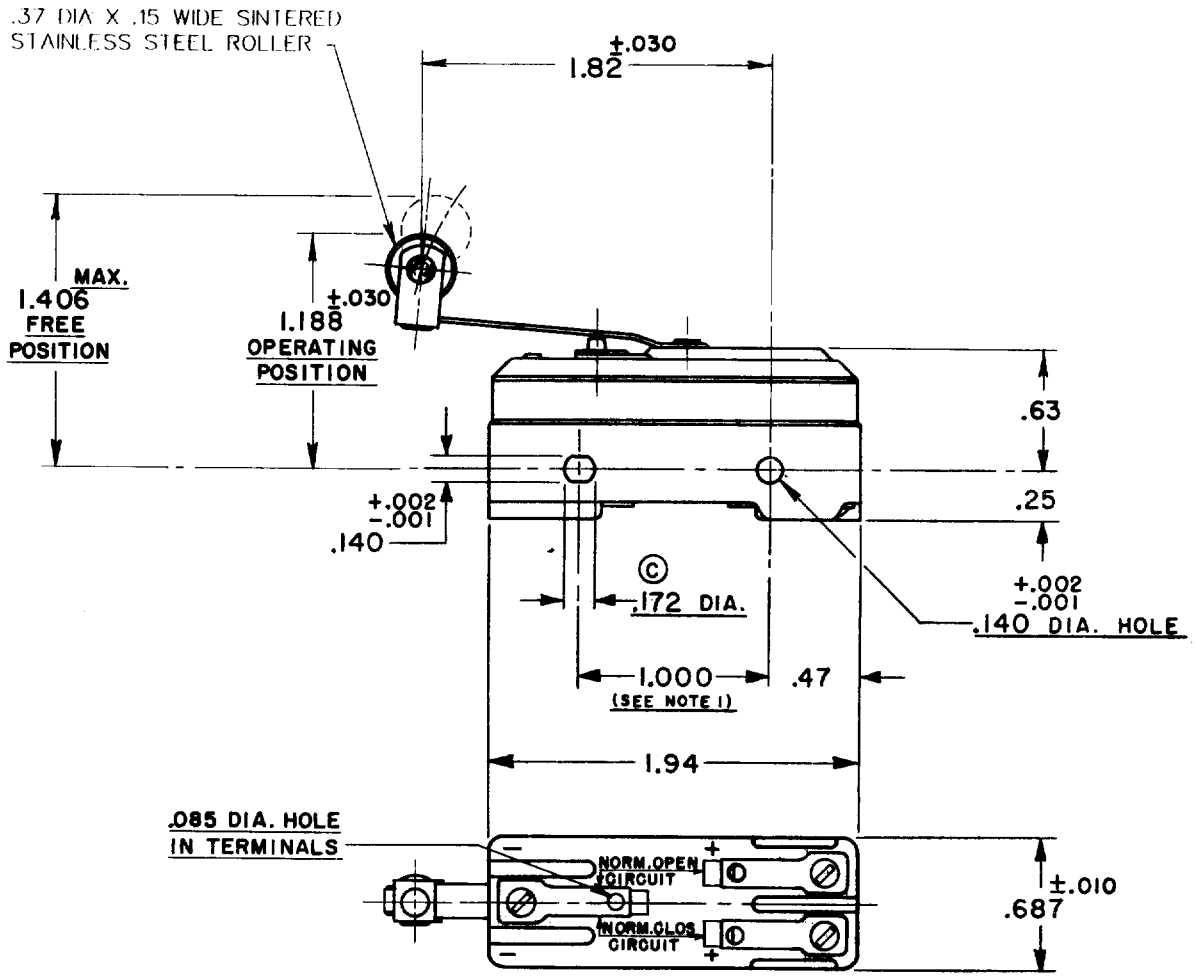

NOTE –
1 – MOUNTING HOLES WILL ACCEPT PINS OR SCREWS OF .139 MAX. DIA. ON 1.000 ±.002 CENTERS.
2 – FOR BEST RESULTS EITHER POLARIZE THE SWITCH WITH THE COMMON TERMINAL WIRED IN NEGATIVE POLARITY OR MOUNT THE SWITCH WITH BRASS SCREWS AND SPACE AT LEAST .250 AWAY FROM MAGNETIC MATERIALS.

THIS DRAWING COVERS A PROPRIETARY ITEM AND IS THE PROPERTY OF MICRO SWITCH, A DIVISION OF HONEYWELL. THIS DRAWING IS NOT TO BE COPIED OR USED WITHOUT THE APPROVAL OF MICRO SWITCH.

CHARACTERISTICS

OPERATING FORCE — — — — 12 OZ. MAX.

RELEASE FORCE — — — — — 1 OZ. MIN.

DO NOT OVERTRAVEL MORE THAN .060

(B)

ELECTRICAL DATA

CONTACT ARRANGEMENT
S. P. D. T.

	VOLTS D-C	MOTOR	RESISTIVE
NON-POLARIZED	125 250	1/4 HP + —	10 AMPS 1.5 TO 3.0*
POLARIZED OR NON-MAGNETICALLY MOUNTED	125 250	1/2 HP + —	10 AMPS 1.5 TO 3.0*

* NOT SUITABLE FOR USE AT LESS THAN 1.5 AMPS
+ WILL NOT BREAK LOCKED ROTOR CURRENT

UND. LAB. INC. LISTED RATING (NON-POLARIZED) – L168 10 A – 125 VDC OR AC; 1/4 HP – 125 VDC OR AC

SCALE FULL
DO NOT SCALE PRINT

UNLESS OTHERWISE SPECIFIED
DIMENSIONS ARE IN INCHES
TOLERANCES ARE:

ONE PLACE	(.0)	±.030
TWO PLACE	(.00)	±.015
THREE PLACE	(.000)	±.005
ANGLES		±

WEIGHT .070 LB.

(M) MT-4RL2 ISSUE 9
REPLACES
RELEASE NO.
MT-4RL2
DRAWING NUMBER
ISSUE

REVISIONS

A	CO 11613	R.E.R. 6 AUG 57
B	CO12369	K.L.B. 11 DEC. 57
C	CO13960	MBF 23 OCT 59
D	CO 35255	GLH 1 MAY 75
E	CO46819	WJM 26 NOV 79
F	CO-75204B	JWB 1 FEB 94

CHECK J. WH 7 AUG 57
CHECK G. CH 7 AUG. 57
CHECK
DRAWN R.E.R. 6 AUG. 57
74-26

Downloaded from Arrow.com.