CUI Devices is now Same Sky! Learn More

SERIES: CFM-92BG | DESCRIPTION: DC AXIAL FAN

FEATURES

- dual ball bearing
- 92 x 92 mm frame
- multiple speed options
- PWM/tachometer wires available

MODEL

MODEL	input voltage rated (Vdc)	input voltage range (Vdc)	input current[1] typ (A)	input current[1] max (A)	input power[1] typ (W)	input power[1] max (W)	rated speed[1] typ (RPM±10%)	airflow[2] (CFM)	static pressure[3] (inch H_2O)	noise[4] typ (dBA)
CFM-9225BG-140-438	12	10.8~13.2	0.36	0.54	4.32	6.48	4,000	70.17	0.37	43.8
CFM-9225BG-150-502	12	10.8~13.2	0.57	0.68	6.84	8.16	5,000	88.09	0.56	50.2
CFM-9225BG-160-545	12	10.8~13.2	0.82	0.98	9.84	11.76	6,000	106.54	0.80	54.5
CFM-9225BG-170-585	12	10.8~13.2	1.32	1.58	15.84	18.96	7,000	124.27	1.07	58.5
CFM-9225BG-240-438	24	21.6~26.4	0.20	0.30	4.80	7.20	4,000	70.17	0.37	43.8
CFM-9225BG-250-502	24	21.6~26.4	0.27	0.40	6.48	9.60	5,000	88.09	0.56	50.2
CFM-9225BG-260-545	24	21.6~26.4	0.45	0.54	10.80	12.96	6,000	106.54	0.80	54.5
CFM-9225BG-270-585	24	21.6~26.4	0.71	0.86	17.04	20.64	7,000	124.27	1.07	58.5

Notes:
1. At rated voltage, after 3 minutes.
2. At rated voltage, room temperature, 65% humidity, 0 inch H_2O static pressure.
3. At rated voltage, 0 CFM airflow.
4. Measured in an anechoic chamber as per ISO3745/GB4214-84 at rated voltage, with background noise 20±2 dBA at 1 m from the fan intake.
5. All specifications are measured at 25°C, 65% relative humidity unless otherwise specified.

PART NUMBER KEY

CFM - 9225BG - 140 - 438 - XX - CXX

Base Number

Fan Signals
"blank" = no signals
20 = tachometer signal
22 = tachometer signal / PWM control signal

Reserved for Custom Configurations

Downloaded from Arrow.com.

INPUT

parameter	conditions/description	min	typ	max	units
operating input voltage[6]	12 Vdc input models 24 Vdc input models	10.8 21.6	12 24	13.2 26.4	Vdc Vdc
starting voltage	12 Vdc input models 24 Vdc input models		7 14		Vdc Vdc

Note: 6. See Model section on page 1 for specific input voltage ranges.

PERFORMANCE[7]

parameter	conditions/description	min	typ	max	units
rated speed	at rated voltage, 25°C, after 3 minutes	4,000		7,000	RPM
air flow	at 0 inch H_2O, see performance curves	70.17		124.27	CFM
static pressure	at 0 CFM, see performance curves	0.37		1.07	inch H_2O
noise	at 1 m, rated speed	43.8		58.5	dBA

Note: 7. See Model section on page 1 for specific values.

PROTECTIONS / FEATURES[8]

parameter	conditions/description	min	typ	max	units
auto restart	on all models				
polarity protection	on all models				
soft start	available on models				
tachometer signal	available on “20” and “22” models				
PWM control signal	available on “22” models				

Notes: 8. See Application Notes for details.

SAFETY & COMPLIANCE

parameter	conditions/description	min	typ	max	units
insulation resistance	at 500 Vdc between frame and positive terminal	10			MΩ
dielectric strength	at 500 Vac, 60 Hz, 1 minute between housing and positive terminal			5	mA
safety approvals	UL/cUL 507, TUV (EN/IEC 62368-1:2020+A11)				
EMI/EMC	EN 55032:2015, EN 55035:2017				
life expectancy	at 40°C, 65% RH, 90% confidence level		70,000		hours
RoHS	yes				

ENVIRONMENTAL

parameter	conditions/description	min	typ	max	units
operating temperature		-10		70	°C
storage temperature		-40		75	°C
operating humidity	non-condensing	35		85	%
storage humidity	non-condensing	35		85	%

Downloaded from Arrow.com.

PERFORMANCE CURVES

CFM-9225BG-140-438

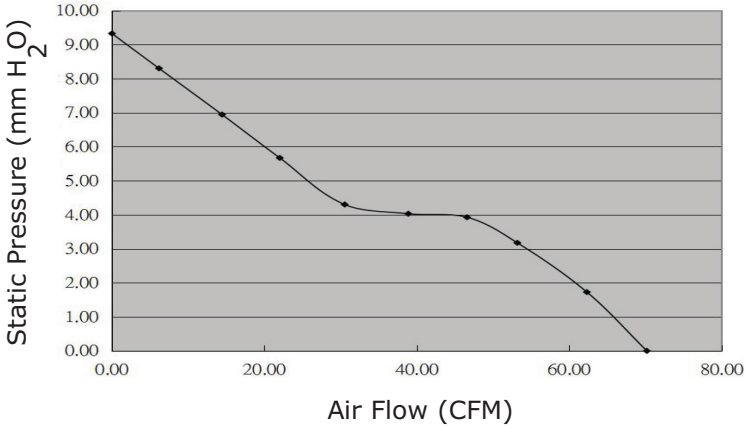

CFM-9225BG-150-502

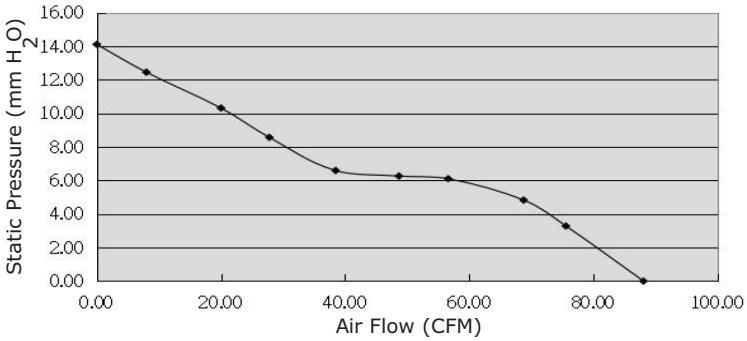

CFM-9225BG-160-545

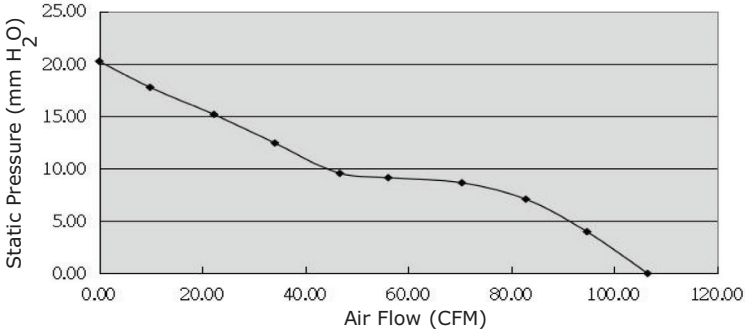

CFM-9225BG-170-585

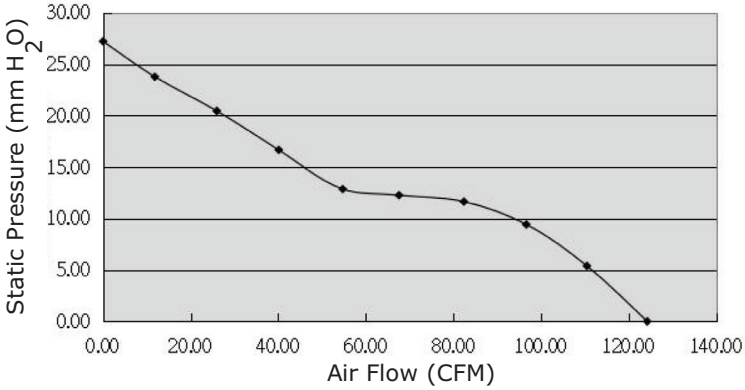

CFM-9225BG-240-438

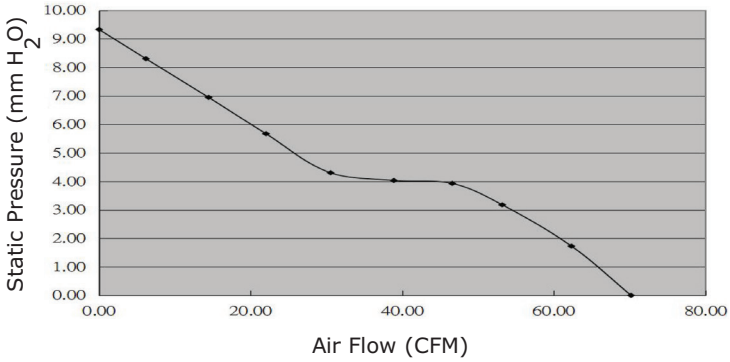

CFM-9225BG-250-502

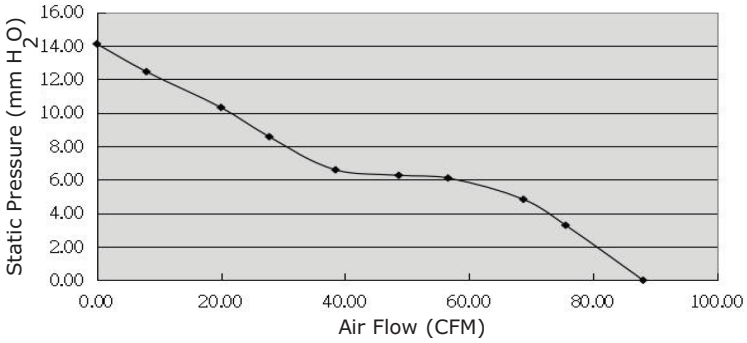

Downloaded from Arrow.com.

PERFORMANCE CURVES (CONTINUED)

CFM-9225BG-260-545

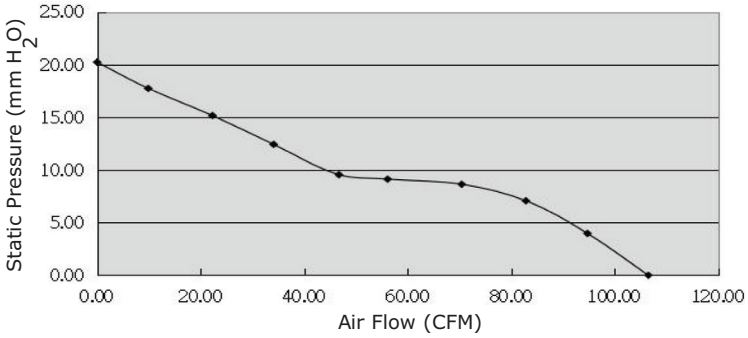

CFM-9225BG-270-585

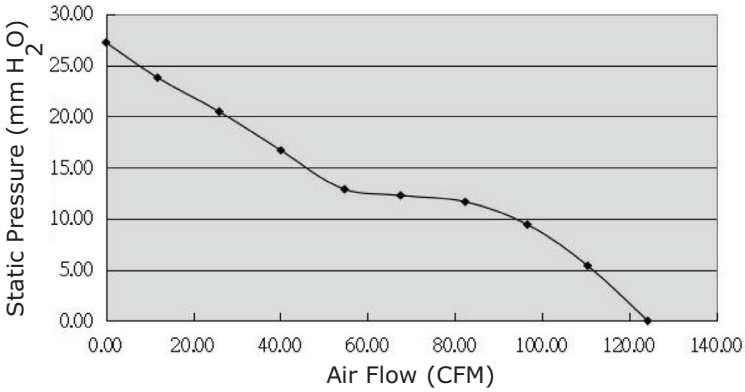

Downloaded from Arrow.com.

MECHANICAL

parameter	conditions/description	min	typ	max	units
motor	4 pole DC brushless				
bearing system	dual ball bearing				
direction of rotation	counter-clockwise viewed from front of fan blade				
dimensions	92 x 92 x 25				mm
material	PBT (UL94V-0)				
weight			138		g

MECHANICAL DRAWING

units: mm

2 wire versions (+Vin & -Vin): UL 1430, 24 AWG
3 wire versions (+Vin, -Vin, & tach): UL 1430, 24 AWG
4 wire versions (+Vin, -Vin, tach, & PWM): UL 1430, 26 AWG

MOUNTING SCREW (Pan Head)			
Screw Type	Size	Standard	Torque
Machine Screw	M4	JIS B1111-1974	7.5 kgf-cm
Self-tapping Screw	M5	JIS B1122 Type 2	7.5 kgf-cm

WIRE CONNECTIONS	
Wire Color	Function
Red	+Vin
Black	-Vin
Yellow[9]	Tach Signal
Blue[9]	PWM

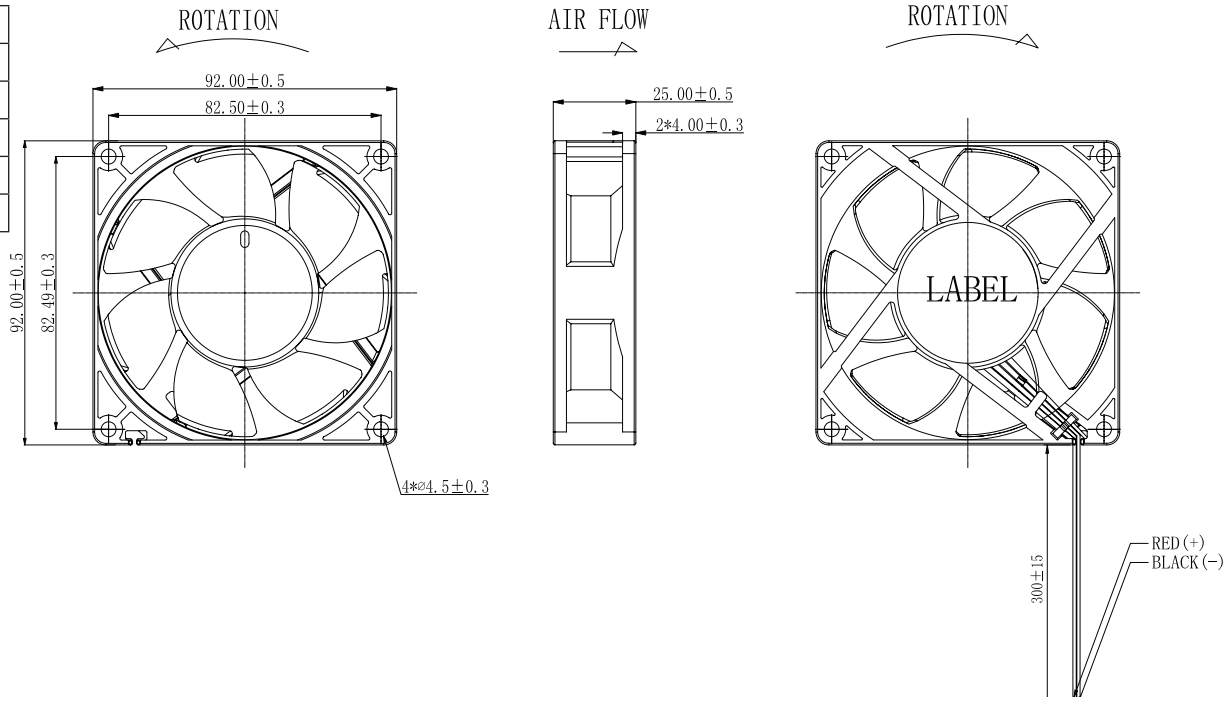

Notes: 9. Wires only present on versions with output signals.

Downloaded from Arrow.com.

APPLICATION NOTES

Auto Restart Protection

When the fan motor is locked by an external force, the device will temporarily turn off electrical power to the motor and restart automatically when the locked rotor condition is released.

Polarity Protection

Able to withstand 10 minutes of reverse polarity connection between the positive and negative wires without causing damage.

Tachometer Signal (Yellow Wire)

The tachometer signal is for detecting the rotational speed of the fan motor. The output will be a square wave when fan is operating and V_{FG} or V_{CE} depending on the locked rotor position when fan motor is locked (See Figures 1~2 below).

Figure 1: Tachometer Output Circuit

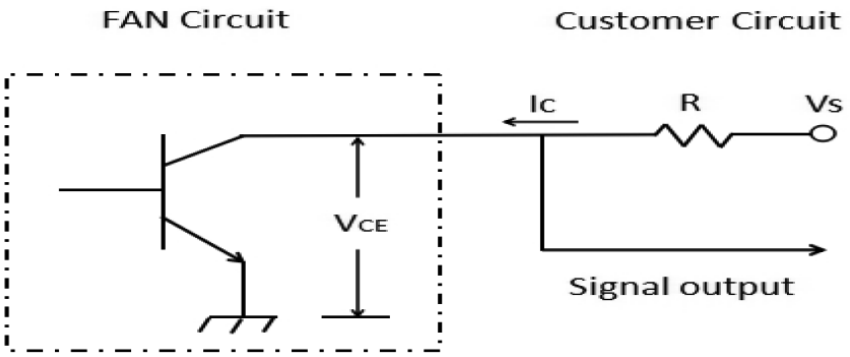

Output Type: Open Collector

Vs: (V_{FG})
5 V fan: 3.3~5 V
All others: 3.3~15 V
Ic≤5 mA
R≥Vs/Ic
V_{CE}(sat)≤0.5 V

Figure 2: Tachometer Output Waveform

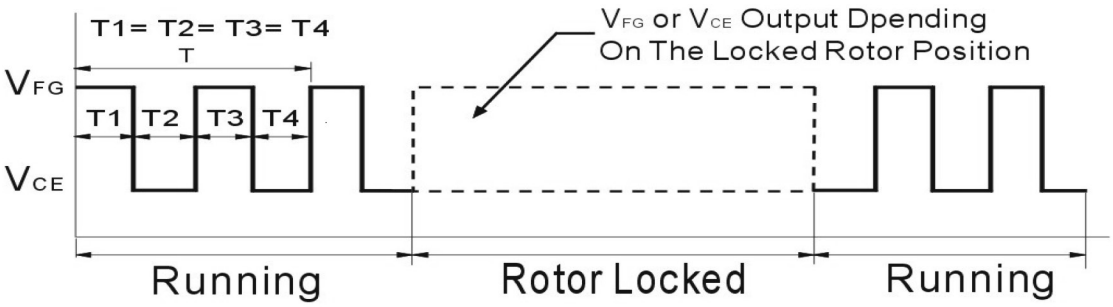

4 Pole Motor

N=RPM
T=60/N (sec)
FG=1/T*2 (Hz)
N=FG*30

Downloaded from Arrow.com.

APPLICATION NOTES (CONTINUED)

PWM Signal (Blue Wire)

This wire is for speed control of the fan motor using a PWM input signal from the customer circuit (See Figure 3 below).

Figure 3: PWM Input Signal

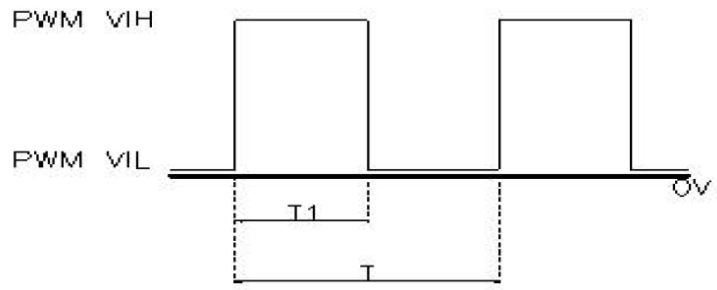

PWM Duty Cycle (%) = T1/T x 100%

Model	PWM Frequency Range (kHz)	PWM VIH (V)	PWM VIL (V)
CFM-9225BG-140-438-22	0.3~50	2.3~10	0~0.7
CFM-9225BG-150-502-22	0.3~50	2.3~10	0~0.7
CFM-9225BG-160-545-22	0.3~50	2.3~10	0~0.7
CFM-9225BG-170-585-22	2~60	2.8~6	0~0.7
CFM-9225BG-240-438-22	0.5~50	2.5~5	-0.3~0.7
CFM-9225BG-250-502-22	0.5~50	2.5~5	-0.3~0.7
CFM-9225BG-260-545-22	0.5~50	2.5~5	-0.3~0.7
CFM-9225BG-270-585-22	2~60	2.8~6	0~0.7

Soft Start

When the fan power is on, the current will increase slowly (~15 seconds) until the fan reaches the rated speed.

Downloaded from Arrow.com.

REVISION HISTORY

rev.	description	date
1.0	initial release	01/24/2024
1.01	CUI Devices rebranded to Same Sky	09/12/2024

The revision history provided is for informational purposes only and is believed to be accurate.

Same Sky offers a one (1) year limited warranty. Complete warranty information is listed on our website.

Same Sky reserves the right to make changes to the product at any time without notice. Information provided by Same Sky is believed to be accurate and reliable. However, no responsibility is assumed by Same Sky for its use, nor for any infringements of patents or other rights of third parties which may result from its use.

Same Sky products are not authorized or warranted for use as critical components in equipment that requires an extremely high level of reliability. A critical component is any component of a life support device or system whose failure to perform can be reasonably expected to cause the failure of the life support device or system, or to affect its safety or effectiveness.

Downloaded from Arrow.com.