MICRO SWITCH
FREEPORT ILLINOIS, U.S.A
A DIVISION OF HONEYWELL
FED. MFG. CODE 81929

SWITCH - BASIC

CATALOG LISTING
BZ-2RW84441-A2
APY0281

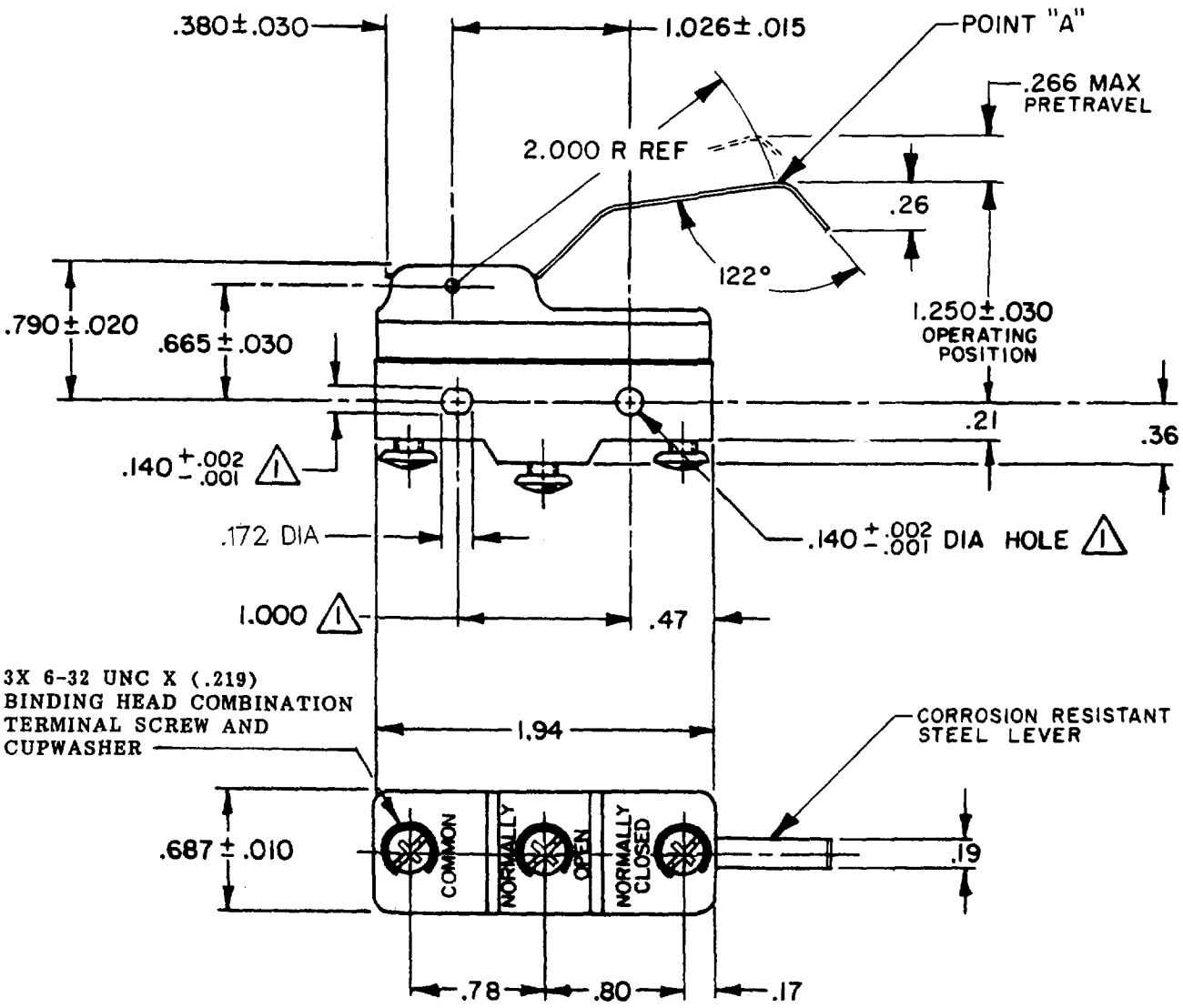

NOTE
(1) MOUNTING HOLES WILL ACCEPT PINS OR SCREWS OF .139 MAX DIA ON 1.000±.002 CENTERS

THIS DRAWING COVERS A PROPRIETARY ITEM AND IS THE PROPERTY OF MICRO SWITCH, A DIVISION OF HONEYWELL. THIS DRAWING IS NOT TO BE COPIED OR USED WITHOUT THE APPROVAL OF MICRO SWITCH.

THIRD ANGLE PROJECTION

CHARACTERISTICS AT POINT "A"

OPERATING FORCE-----1 1/4 OZ MAX

RELEASE FORCE-------1/8 OZ MIN

DIFFERENTIAL TRAVEL---.005-.040

OVERTRAVEL----------.172 MIN

ELECTRICAL DATA

CONTACT ARRANGEMENT
S P D T

CODE L96 15A-125, 250 OR 480 VAC
1/8 HP-125 VAC; 1/4 HP-250 VAC
1/2 A-125 VDC; 1/4 A-250 VDC

L288
L315
L306

16A 250V ~ T85 5E4

SCALE FULL

DO NOT SCALE PRINT

TOLERANCES
APPLY TO DESIGN UNITS. CONVERSIONS ARE ONLY FOR REFERENCE. UNLESS NOTED, TOLERANCES ARE ±

	DIM. mm	TOL. mm/in	DIM. in	TOL. mm/in
NO PLACES	X	1/.04		
ONE PLACE	X.X	0.4/.016	X.X	0.8/.03
TWO PLACES	X.XX	0.16/.006	X.XX	0.38/.015
THREE PLACES			X.XXX	0.13/.005
ANGLES				

DESIGN UNITS: ☐ METRIC ☒ US CUSTOMARY

WEIGHT .073 LB

REVISIONS

A	CO-73287-J	JAL 22 NOV 93	08DEC05
B	CO 77589	TSM 29 MAR 94	
C	C093346	DLT 17 SEP 98	RJ
D	0017579	KRB 08DEC05	

DRAWN	CEB	17 FEB 83	
CHECK	DW	17 FEB 83	
CHECK			
CHECK			

FORMTEK FO-52848-A

BZ-2RW84441-A2 PAGE 1 OF 1
RELEASE NO. PR-11928
REPLACES X75800-BZ
DRAWING NUMBER M
ISSUE 5

Downloaded from Arrow.com.