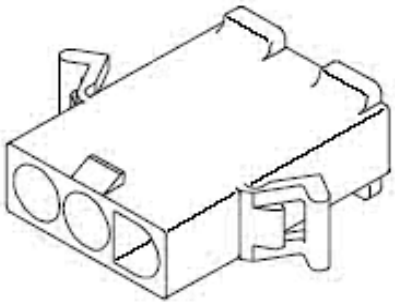

Part Number : 39036030
Product Description : 2.36mm Diameter Standard .093" Pin and Socket Plug Housing with Positive Latch, UL 94V-2, with Panel Mount, 3 Circuits
Series Number : 3191
Status : Active
Product Category : Connector Housings
Engineering Part Number : 3191-03P

Documents and Resources

Drawings

039036030_sd.pdf

3D Models and Design Files

STEP AP242

SOLIDWORKS

Creo

Specifications

SPK-3191-001-001.pdf

PS-3191-001-001.pdf

Product Environment Compliance

Compliance

GADSL/IMDS	Not Relevant
China RoHS	per SJ/T 11365-2006
EU ELV	Not Relevant
Low-Halogen Status	Low-Halogen per IEC 61249-2-21
REACH SVHC	Not Contained per D(2025)7771-DC (04 Feb 2026)
EU RoHS	Compliant per EU 2015/863

Compliance Statements

- EU RoHS
- REACH SVHC
- Low-Halogen

Industry Documents

Downloaded from Arrow.com.

- IPC 1752A Class C
- IPC 1752A Class D
- Molex Product Compliance Declaration
- IEC-62474
- chemSHERPA (xml)

Substances of Interest
- PFAS

EU RoHS Certificate of Compliance

Additional Product Compliance Information

Part Details

General

Status	Active
Category	Connector Housings
Series	3191
Description	2.36mm Diameter Standard .093" Pin and Socket Plug Housing with Positive Latch, UL 94V-2, with Panel Mount, 3 Circuits
Application	Wire-to-Board, Wire-to-Wire
Comments	Polarized to Mating Part
Component Type	Plug
Product Name	Standard .093"
UPC	800753756861

Agency

CSA	LR19980
UL	E29179

Physical

Circuits Detail	1x3
Circuits (maximum)	3
Color - Resin	Natural
Flammability	94V-2
Gender	Plug
Glow-Wire Capable	No

Downloaded from Arrow.com.

Keying to Mating Part	No
Lock to Mating Part	Yes
Material - Resin	Nylon
Net Weight	3902.000/mg
Number of Rows	1
Packaging Type	Bag
Panel Mount	Yes
Pitch - Mating Interface	6.70mm
Polarized to Mating Part	Yes
Stackable	No
Temperature Range - Operating	-40° to +105°C

Mates With / Use With

Mates with Part(s)

Description	Part Number
2.36mm Diameter Standard .093" Pin and Socket Receptacle Housing with Positive Latch, UL 94V-2, without Panel Mount, 3 Circuits	39036034
Standard .093" Pin and Socket Vertical Headers	5219

Use with Part(s)

Description	Part Number
Standard .093" Pin and Socket Female Crimp Terminals	1189
Standard .093" Pin and Socket Female Crimp Terminals	1381
Standard .093" Pin and Socket Female Crimp Terminal	4550
Standard .093" Pin and Socket Male Crimp Terminals	1190
Standard .093" Pin and Socket Male Crimp Terminals	1380
Standard .093" Pin and Socket	1434

Downloaded from Arrow.com.

Male Crimp Terminal	
Standard .093" Pin and Socket Male Crimp Grounding Terminals	1973
2.36mm Diameter, Standard .093" Pin and Socket Male Crimp Terminals	42138

Downloaded from Arrow.com.