THIS DRAWING IS UNPUBLISHED. RELEASED FOR PUBLICATION 2014
VERTRAULICHE UNVEROEFFENTLICHTE ZEICHNUNG FREI FUER VEROEFFENTLICHUNG
© COPYRIGHT 2014 Tyco Electronics AMP GmbH ALL RIGHTS RESERVED. ALLE RECHTE VORBEHALTEN.

MATED WITH: PASSEND ZU:

PROJEKT NR.: PRJ-14-000000805

REVISIONS AENDERUNGEN

P	LTR	DESCRIPTION BESCHREIBUNG	DATE	DWN	APVD
	A1	NEW DRAWING	15MAY2014	YR	CS

1 MATERIAL: ITEM NO. 1: HOUSING - PA/ZINC DIECASTING, NICKEL PLATED, PA
ITEM NO. 2: CONTACT BODY - PA
ITEM NO. 3: CONTACT - CuZn (brass)
CONTACT FINISH - CuSnZn (Optalloy)

2 ALL DIMENSIONS ARE FOR NOMINAL REFERENCE ONLY UNLESS OTHERWISE STATED

3 MEASUREMENT REFERENCE ONLY

4 PACKAGING: 1 PIECE IN A BAG

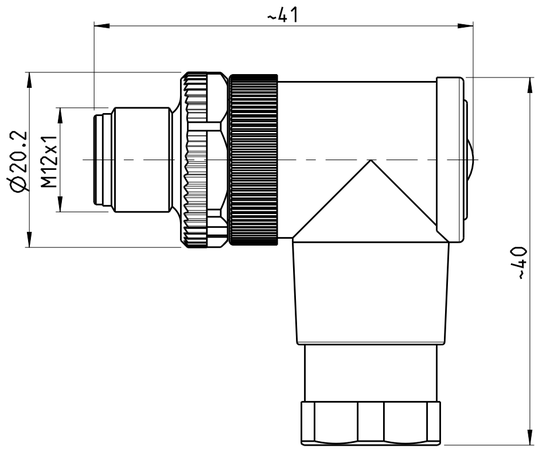

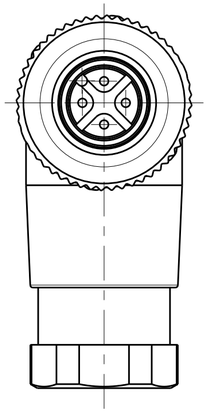

TECHNICAL DATA	3-2271124-1	3-2271124-2	4-2271124-1	4-2271124-2
RATED VOLTAGE	250V	250V	125V	125V
RATED IMPULSE VOLTAGE	2500V	2500V	1500V	1500V
POLLUTION DEGREE	3	3	3	3
OVERVOLTAGE CATEGORY	II	II	II	II
MATERIAL GROUP	II	II	II	II
RATED CURRENT	4A	4A	4A	4A
VOLUME RESISTIVITY	≤ 8mΩ	≤ 8mΩ	≤ 8mΩ	≤ 8mΩ
DEGREE OF PROTECTION	IP67	IP67	IP67	IP67
UPPER TEMPERATURE	+85 °C	+85 °C	+85 °C	+85 °C
LOWER TEMPERATURE	-40 °C	-40 °C	-40 °C	-40 °C

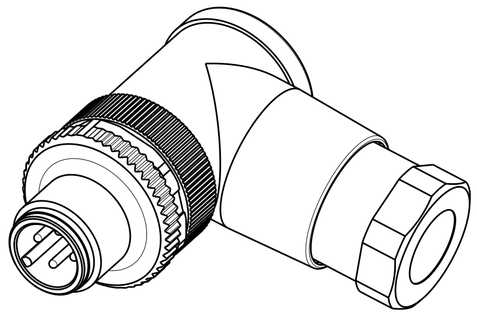

3-2 AS SHOWN WIE GEZEICHNET

CABLE FEED-THROUGH mm	WIRES AWG / mm²	MATERIAL	NUMBER OF POLES	TE-PART-NO.
6-8	18 / 0.75mm²	1	5	4-2271124-2
4-6	18 / 0.75mm²	1	5	4-2271124-1
6-8	18 / 0.75mm²	1	4	3-2271124-2
4-6	18 / 0.75mm²	1	4	3-2271124-1

PIN ARRANGEMENT
B-CODING (SCALE 2:1)

3-2271124-1	3-2271124-2	4-2271124-1	4-2271124-2
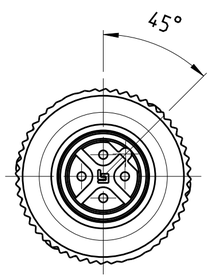	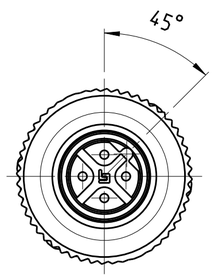	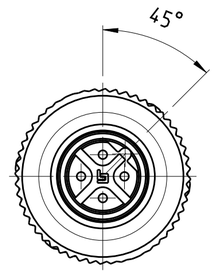	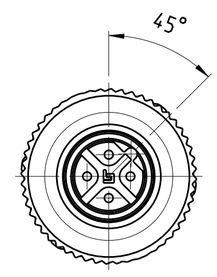

SIZE ISO 14405 Ⓔ

DIESE ZEICHNUNG IST EIN KONTROLLIERTES DOKUMENT.
BEMASSUNGEN UND TOLERANZEN GEMAESS GPS (ISO STANDARDS).

THIS DRAWING IS A CONTROLLED DOCUMENT.
DIMENSIONING AND TOLERANCING PER GPS (ISO STANDARDS).

DIMENSIONS: MASSEINHEITEN: mm

TOLERANCES UNLESS OTHERWISE SPECIFIED: ALLGEMEINTOLERANZEN
0 PLC ±
1 PLC ±
2 PLC ±
3 PLC ±
4 PLC ±
ANGLES/WINKEL ±

MATERIAL -
FINISH/OBERFLAECHE/FARBE -

DWN YASHKUMAR 15MAY2014
CHK M.STRELOW 15MAY2014
APVD C.SCHRETTLINGER 15MAY2014

PRODUCT SPEC PRODUKTSPEZ. -
APPLICATION SPEC VERARBEITUNGSSPEZ. -
WEIGHT GEWICHT -

TE Connectivity

NAME M12 MALE 90 DEG ANGLED FIELD INSTALLABLE, UNSHIELDED CONNECTOR, SOLDER TERMINALS, B-CODING

SIZE	CAGE CODE	DRAWING NO ZEICHNUNGS-NR.	RESTRICTED TO NUR FUER
A2	00779	C-2271124	-

Customer Drawing /KUNDENZEICHNUNG | SCALE MASSSTAB 2:1 | SHEET BLATT 1 OF VON 1 | REV A1

OBSOLETE
NOT THE LATEST REVISION

1471-9 (3/13)

Downloaded from Arrow.com.