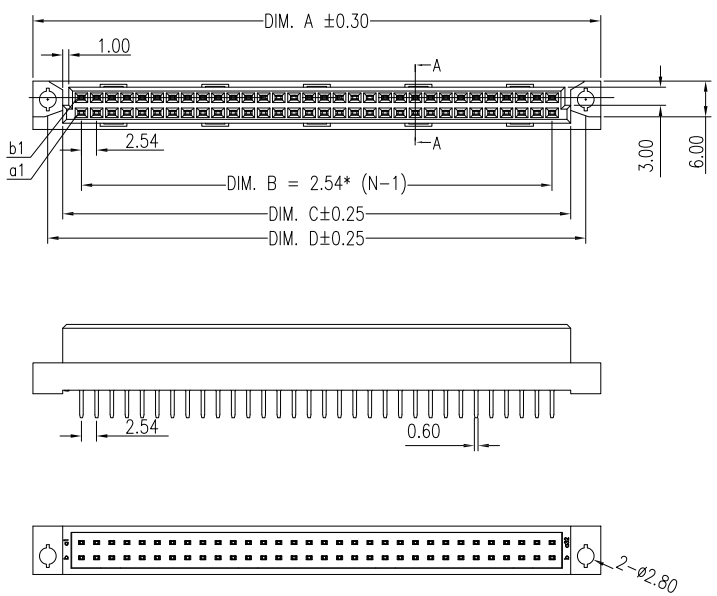

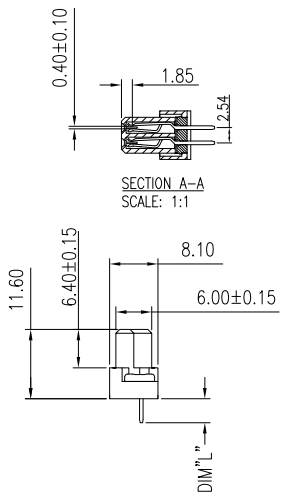

Technical specifications:

Materials:

1. Insulator: Glass-Filled PBT, Color: Grey, UL 94V-0
2. Contact: Copper Alloy

Contact plating according DIN41612 performance classes:

Performance class I (-1)	500 mating cycles min. 30u" AU plating on mating area, Gold Flash on non-mating area, 50u" Nickel underplating 100u" Sn plating on solder area over 50u" Nickel
Performance class II (-2)	250 mating cycles min. 15u" AU plating on mating area, Gold Flash on non-mating area, 50u" Nickel underplating 100u" Sn plating on solder area over 50u" Nickel
Performance class III (blank)	50 mating cycles min. Gold flash on mating side over 50u" Nickel 100u" Sn plating on solder area over 50u" Nickel

Other specifications:

Contact resistance:	20mOhm max.
Insulation resistance:	10^{12}Ohm min.
Current rating:	2A
Operating temperature:	-40°C to 105°C
Operating voltage:	125VAC
Test voltage:	1000VAC
Packaging:	Tray

Recommended P.C.B Layout(Top Side)
(PCB BOARD TOLERANCE±0.05)

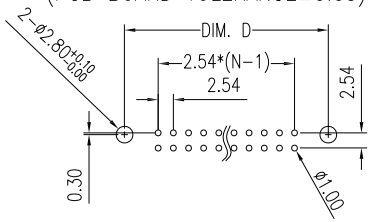

ROWS	DIM.A	DIM.B	DIM.C	DIM.D
2	95.00	78.74	85.00	90.00
2	55.00	38.10	44.40	50.00

DIN41612 STYLE B FEMALE STRAIGHT

ORDERING CODE									CONTACT DETAILS				
		Style	M=Male F=Female	No of pins	Rows loaded	Pin type		Plating Class	Pin length		Cross section	Pin load	Pin type/ direction
A	-	B	F	xx	xx	x	-	x					

Options (if another contact loading option is needed, please contact your sales office)

A	-	B	F	64	ab	T	-	1	T :	4.00 (±0.25)	0.60x0.60(±0.03)	ab: 2x32	THT straight (Page 1)
				32	a	T2.5		2	T2.5 :	2.50 (±0.25)		a: 1x32	
						W5		blank	W5 :	4.57 (±0.25)			
						WAB			WAB :	13.00 (±0.20)	0.64x0.60(±0.03)		THT Wrap post (Page 2)
						P			P :	5.00 (±0.20)			Press-In straight (Page 3)
						PWAB			PWAB :	13.00 (±0.20)			

RoHS compliant
Unit: mm

c UL us
File No.: E198287

Scale	Free
TOLERANCE	
X.	±X
X.X	±0.40
X.XX	±0.25
X.XXX	±0.15
DIM	TOL
Angle	±3°

Id.	Modification	Date	Name
③	Add UL E-file No.	14.05.2021	Daniel
②	Add the page 2&3	01.02.2021	Winnie
①	Change to new plant	17.08.2020	Winnie
⓪	Drawn	24.05.2013	Winnie

	Date	Name
Drawn	24.05.2013	Winnie
Approved	14.05.2021	Daniel

ASSMANN WSW components

Description: DIN 41612
Type B / Female / Straight

ASSMANN WSW-No.
A-BFxxxxx-x

Drawing-No.
ASS 5674 CO
rev03

Customer-No.

SHEET
1 / 3

SV4824
SV5023

Downloaded from Arrow.com.

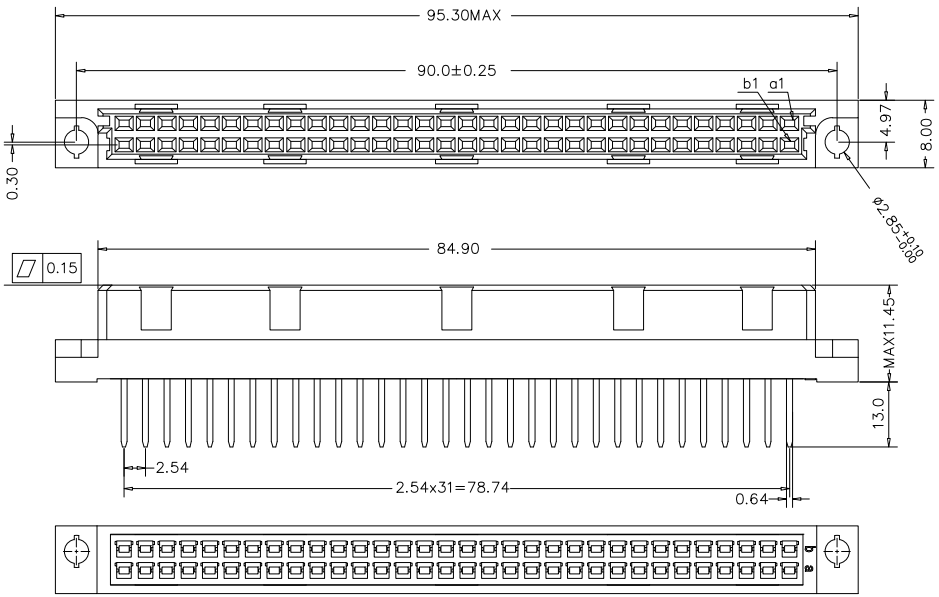

Recommended P.C.B Layout(Top Side)
(PCB BOARD TOLERANCE±0.05)

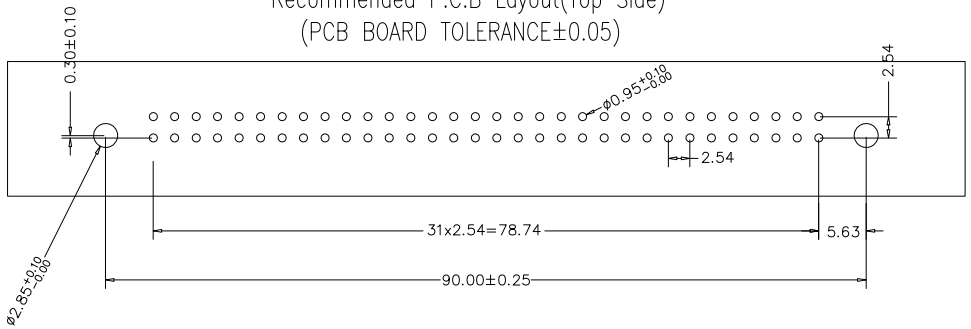

Technical specifications:

Materials:

1. Insulator: Glass-Filled PBT, Color: Grey, UL 94V-0
2. Contact: Copper Alloy

Contact plating according DIN41612 performance classes:

Performance class I	500 mating cycles min.
(-1)	30u" AU plating on mating area, Gold Flash on non-mating area,
	50u" Nickel underplating
	100u" Sn plating on solder area over 50u" Nickel
Performance class II	250 mating cycles min.
(-2)	15u" AU plating on mating area, Gold Flash on non-mating area,
	50u" Nickel underplating
	100u" Sn plating on solder area over 50u" Nickel
Performance class III	50 mating cycles min.
(blank)	Gold flash on mating side over 50u" Nickel
	100u" Sn plating on solder area over 50u" Nickel

Other specifications:

Contact resistance:	20mOhm max.
Insulation resistance:	10^{12}Ohm min.
Current rating:	2A
Operating temperature:	-40°C to 105°C
Operating voltage:	125VAC
Test voltage:	1000VAC
Packaging:	Tray

DIN41612 STYLE B FEMALE STRAIGHT

ORDERING CODE									CONTACT DETAILS			
		Style	M=Male F=Female	No of pins	Rows loaded	Pin type		Plating Class	Pin length	Cross section	Pin load	Pin type/ direction
A	-	B	F	xx	xx	x	-	x				

Options (if another contact loading option is needed, please contact your sales office)

A	-	B	F	64	ab	T	-	1	T :	4.00 (±0.25)	0.60x0.60(±0.03)	ab: 2x32	THT straight (Page 1)
				32	a	T2.5		2	T2.5 :	2.50 (±0.25)		a: 1x32	
						W5		blank	W5 :	4.57 (±0.25)			
						WAB			WAB :	13.00 (±0.20)	0.64x0.60(±0.03)		THT Wrap post (Page 2)
						P			P :	5.00 (±0.20)			Press-In straight (Page 3)
						PWAB			PWAB :	13.00 (±0.20)			

RoHS compliant
Unit: mm

c UL us
File No.: E198287

Scale	Free
TOLERANCE	
X.	±X
X.X	±0.40
X.XX	±0.25
X.XXX	±0.15
DIM	TOL
Angle	±3°

Id.	Modification	Date	Name
③	Add UL E-file No.	14.05.2021	Daniel
②	Add the page 2&3	01.02.2021	Winnie
①	Change to new plant	17.08.2020	Winnie
⓪	Drawn	24.05.2013	Winnie

	Date	Name
Drawn	24.05.2013	Winnie
Approved	04.02.2021	Daniel

ASSMANN WSW components

Description: DIN 41612
Type B / THT Wrap/Female / Straight

ASSMANN WSW-No.
A-BFxxxxx-x

Drawing-No.
ASS 5674 CO

rev03

Customer-No.

SHEET
2 / 3

Downloaded from Arrow.com.

SV4824
SV5023

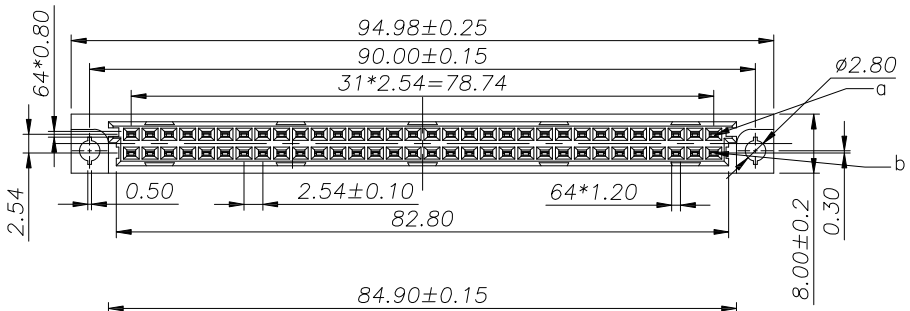

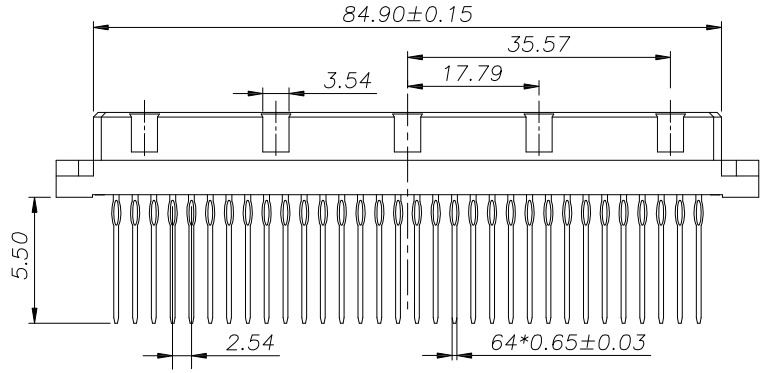

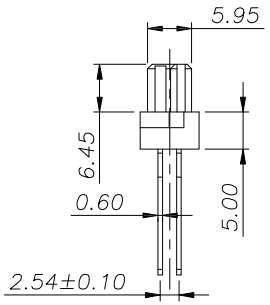

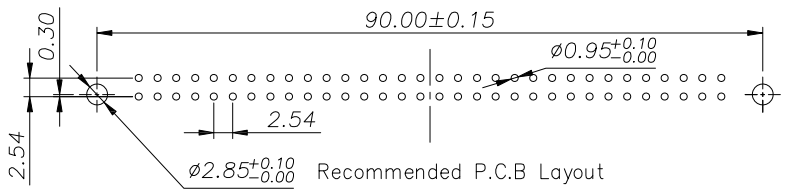

Technical specifications:

Materials:

1. Insulator: Glass-Filled PBT, Color: Grey, UL 94V-0
2. Contact: Copper Alloy

Contact plating according DIN41612 performance classes:

Performance class I (-1)	500 mating cycles min. 30u" AU plating on mating area, Gold Flash on non-mating area, 50u" Nickel underplating 100u" Sn plating on solder area over 50u" Nickel
Performance class II (-2)	250 mating cycles min. 15u" AU plating on mating area, Gold Flash on non-mating area, 50u" Nickel underplating 100u" Sn plating on solder area over 50u" Nickel
Performance class III (blank)	50 mating cycles min. Gold flash on mating side over 50u" Nickel 100u" Sn plating on solder area over 50u" Nickel

Other specifications:

Contact resistance:	20mOhm max.
Insulation resistance:	10^{12}Ohm min.
Current rating:	2A
Operating temperature:	-40°C to 105°C
Operating voltage:	125VAC
Test voltage:	1000VAC
Packaging:	Tray

DIN41612 STYLE B FEMALE STRAIGHT

ORDERING CODE									CONTACT DETAILS				
		Style	M=Male F=Female	No of pins	Rows loaded	Pin type		Plating Class	Pin length		Cross section	Pin load	Pin type/ direction
A	-	B	F	xx	xx	x	-	x					
Options (if another contact loading option is needed, please contact your sales office)													
A	-	B	F	64	ab	T	-	1	T :	4.00 (±0.25)	0.60x0.60(±0.03)	ab: 2x32	THT straight (Page 1)
				32	a	T2.5		2	T2.5 :	2.50 (±0.25)		a: 1x32	
						W5		blank	W5 :	4.57 (±0.25)			
						WAB			WAB :	13.00 (±0.20)	0.64x0.60(±0.03)		THT Wrap post (Page 2)
						P			P :	5.00 (±0.20)			Press-In straight (Page 3)
						PWAB			PWAB :	13.00 (±0.20)			

RoHS compliant
Unit: mm

File No.: E198287

Scale	Free
TOLERANCE	
X.	±X
X.X	±0.40
X.XX	±0.25
X.XXX	±0.15
DIM	TOL
Angle	±3°

Id.	Modification	Date	Name
③	Add UL E-file No.	14.05.2021	Daniel
②	Add the page 2&3	01.02.2021	Winnie
①	Change to new plant	17.08.2020	Winnie
⓪	Drawn	24.05.2013	Winnie

	Date	Name
Drawn	24.05.2013	Winnie
Approved	04.02.2021	Daniel

ASSMANN WSW components

Description: DIN 41612
Type B / Press-in /Female / Straight

ASSMANN WSW-No.
A-BFxxxxx-x

Drawing-No.
ASS 5674 CO

rev03

Customer-No.

SHEET
3 / 3

SV4824
SV5023

Downloaded from Arrow.com.