RFT-20Y Series

20 W Isolated DC-DC Converter

Not Recommended for New Design
Suggested replacement:
PRFE20W-D Series

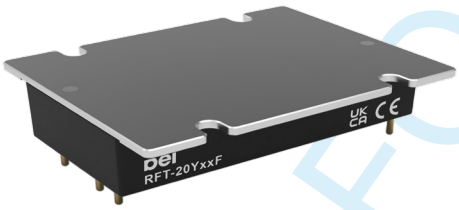

The RFT-20Y Series is a high-performance product, specifically designed for a variety of railway applications. The DC-DC converters feature 20 W single output voltage, wide input voltage from 14 - 160 VDC and extended operating temperature range from -40 to 105°C.

Additional product features include input under-voltage protection, output over-voltage, short-circuit, over-current and over-temperature protection and output voltage trim adjustment. The products are widely used in railway systems and associated equipment.

Key Features & Benefits

- Ultra-wide 12:1 input voltage range: 14 – 160 VDC
- High efficiency up to 90%
- Reinforced insulation, I/O isolation test voltage 3 kVAC
- Operating ambient temperature range -40 °C to +105 °C
- Input under-voltage protection, output over–voltage, over-current, short-circuit protection, over-temperature protection
- Industry standard 2" x 1" package and pin-out
- Meets EN 50155 and AREMA standard
- Safety approved according to IEC 62368-1 & UL/CSA 62368-1

Applications

- Railway related equipment

NOT FOR NEW DESIGN

Please read our datasheet & drawing disclaimer here.

Downloaded from Arrow.com.

1. MODEL SELECTION

PART NUMBER	INPUT VOLTAGE RANGE [VDC]	OUTPUT VOLTAGE [VDC]	MAX. OUTPUT CURRENT [mA]	TYPICAL EFFICIENCY [%]	MAX. CAPACITIVE LOAD [µF]	SUFFIX
RFT-20Y03*x*	14 – 160	3.3	6060	84	6500	No suffix = Standard model C = Added Heatsink F = Added Flanged baseplate
RFT-20Y05*x*	14 – 160	5	4000	84	4600	
RFT-20Y12*x*	14 – 160	12	1667	85	2200	
RFT-20Y15*x*	14 – 160	15	1333	86	1500	
RFT-20Y24*x*	14 – 160	24	833	86	460	
RFT-20Y28*x*	14 – 160	28	714	86	380	
RFT-20Y48*x*	14 – 160	48	417	86	220	
RFT-20Y54*x*	14 – 160	54	370	86	220	

2. INPUT SPECIFICATIONS

PARAMETER	DESCRIPTION / CONDITIONS	MIN.	TYP.	MAX.	UNIT
Input Voltage Range	Nominal	–	110	–	VDC
	Continuous operation	16.8	–	160	
	For ≤ 100 ms	14	–	–	
Input Current	24 V input, full load	–	0.97	1.02	A
	72 V input, full load	–	0.32	0.34	
	110 V input, full load	–	0.21	0.22	
No-Load Power Consumption	Full input range	–	1.2	2.0	W
Reflected Ripple Current	Nominal input voltage	–	150	–	mA
Surge Voltage	1 sec. max.		–	200	VDC
Input Under-Voltage Protection		10	12.5	–	VDC
Start-up Time		–	50	100	ms
Ctrl [1]	Module on	Ctrl pin open or pulled high (3.5 - 12 VDC)			
	Module off	Ctrl pin pulled low to -Vin (0 - 1.2 VDC)			
	Input power consumption when off, full input range	–	0.7	1.6	W

[1] *The Ctrl pin voltage is referenced to input -Vin.*

3. OUTPUT SPECIFICATIONS

PARAMETER	DESCRIPTION / CONDITIONS	MIN	TYP.	MAX.	UNIT
Voltage Accuracy	Nominal input voltage, full load	–	±1	±2	%
Linear Regulation	Input voltage variation from min. to max. at full load	–	–	±0.5	%
Load Regulation	Nominal input voltage, 10% - 100% load	–	±0.5	±1	%
Transient Recovery Time	25% load step change @ 25°C	–	–	500	µs
Transient Response Deviation		–	±3	±9	%
Temperature Coefficient	Nominal input voltage, full load	–	–	±0.03	% / °C
Ripple & Noise [2]	20 MHz bandwidth, full load @ 25°C	–	100	200	mVp-p
Output Voltage Trim Range		90	–	110	% Vo
Over-Temperature Protection	Max. case temperature	106	–	130	°C
Over-Voltage Protection	Input voltage range	110	–	160	% Vo
Over-Current Protection	Input voltage range	110	–	260	% Io
Short-Circuit Protection	Input voltage range	Hiccup, continuous, self-recovery			

[2] *For ripple and noise measuring method, please refer to Figure 3.*

Downloaded from Arrow.com.

4. GENERAL SPECIFICATIONS

PARAMETER	DESCRIPTION / CONDITIONS		MIN	TYP.	MAX.	UNIT
Isolation	Electric Strength Test	Input-output	3000	–	–	VAC
		Input-case	2800	–	–	
		Output-case	2100	–	–	
Insulation Resistance	Input-output resistance at 500 VDC		1000	–	–	MΩ
Isolation Capacitance	Input-output capacitance at 100 kHz / 0.1 V		–	1500	–	pF
Operating Temperature			-40	–	105	°C
Storage Temperature			-55	–	125	°C
Pin Soldering Resistance Temperature	Soldering spot is 1.5 mm away from case for 10 seconds		–	–	300	°C
Storage Humidity	Non-condensing		5	–	95	%RH
Switching Frequency	PWM mode		–	170	–	KHz
MTBF	IEC 61709 @ 25 °C		1000	–	–	kh
Dry Heat Test	Ta +85°C (conduction cooling)		EN 60068-2-2, Be			
Shock and Vibration Test			IEC/EN 61373 Category 1, Class B AREMA Part 11.5.1 Class C, D, E. I, J			
Pollution Level			PD 3			
Fire & Smoke Compliance			EN 45545-2, HL3			
Salt Mist Test	Duration 48 h		EN 60068-2-11, Ka			
Cyclic Damp Heat Test	2 cycles @ +55 °C		EN 60068-2-30, Db variant 2			
Altitude [3]			5000 m			
Low Temperature Start-Up & Storage Test	Ta -40 °C		EN 60068-1, Ad and Ab			

[3] *Derating is needed for altitudes above 2000 m.*

5. MECHANICAL SPECIFICATIONS

PARAMETER	DESCRIPTION	VALUE
Case Material		Aluminum alloy case, black plastic bottom cover (UL94 V-0)
Dimension	Without heat sink	50.8 x 25.4 x 11.8 mm
	With heat sink (suffix C)	50.8 x 25.4 x 22.8 mm
	With flanged baseplate (suffix F)	50.8 x 40.0 x 11.8 mm
Weight	Without heat sink	42 g (Typ.)
	With heat sink (suffix C)	45 g (Typ.)
	With flanged baseplate (suffix F)	61 g (Typ.)
Cooling Method		Conduction cooling or forced air cooling. Free air convection cooling with additional heat sink.

6. ELECTROMAGNETIC COMPATIBILITY (EN50121-3-2)

NOT FOR NEW DESIGN

Downloaded from Arrow.com.

PARAMETER		DESCRIPTION		CLASS / CRITERIA
Emission [4]	CE	EN 55016-2-1	150 kHz – 500 kHz; 79 dBuV (see Fig. 6 for recommended circuit) 500 kHz – 30 MHz; 73 dBuV (see Fig. 6 for recommended circuit)	CLASS A
	RE	CISPR16-2-3	30 MHz – 230 MHz ; 40 dBuV/m at 10 m (see Fig. 6 for recommended circuit) 230 MHz – 6 GHz; 47 dBuV/m at 10 m (see Fig. 6 for recommended circuit)	CLASS A
Immunity	ESD	EN 61000-4-2	Contact ±6 kV/Air ±8 kV	perf. Criteria A
	RS	EN 61000-4-3	80 – 800 MHz; 20 V/m 800 – 1000 MHz; 20 V/m 1400 – 2000 MHz; 10 V/m 2000 – 2700 MHz; 5 V/m 5100 – 6000 MHz; 3 V/m	perf. Criteria A
	EFT	EN 61000-4-4	±2 kV; 5/50 ns; 5 kHz (see Fig. 6 for recommended circuit)	perf. Criteria A
	Surge	EN 61000-4-5	Line to line ±1 kV (42 Ω, 0.5 µF) (see Fig. 6 for recommended circuit) Line to line ±1 kV (2 Ω, 18 µF) (see Fig. 6 for recommended circuit)	perf. Criteria A
	CS	EN 61000-4-6	0.15 MHz – 80 MHz 10 V r.m.s	perf. Criteria A

[4] *Corresponds or exceeds EN50121-3-2.*

7. ELECTROMAGNETIC COMPATIBILITY (AREMA)

PARAMETER		DESCRIPTION		CLASS / CRITERIA
Emissions	CE	CISPR16-2-1 CISPR16-1-2	150 kHz – 500 kHz; 79 dBuV (see Fig. 6 for recommended circuit) 500 kHz – 30 MHz; 73 dBuV (see Fig. 6 for recommended circuit)	CLASS A
	RE	CISPR16-2-3	30 MHz – 230 MHz; 40 dBuV/m at 10 m (see Fig. 6 for recommended circuit) 230 MHz – 1 GHz; 47 dBuV/m at 10 m (see Fig. 6 for recommended circuit)	CLASS A
Immunity	ESD	IEC 61000-4-2	Contact ±6 kV/Air ± 8 kV	perf. Criteria A
	RS	IEC 61000-4-3	80 – 1000 MHz; 10 V/m 160 – 165 MHz; 20 V/m 450 – 470 MHz; 20 V/m 800 – 960 MHz; 20 V/m 1400 – 2000 MHz; 20 V/m 2100 – 2500 MHz; 5 V/m	perf. Criteria A
	EFT	IEC 61000-4-4	±2 kV 5/50 ns; 5 kHz (see Fig. 6 for recommended circuit)	perf. Criteria A
	Surge	IEC 61000-4-5	Line to line ±2 kV (2 Ω, 18 µF) (see Fig. 6 for recommended circuit)	perf. Criteria A
	CS	IEC 61000-4-6	0.15 MHz-80 MHz; 10 V r.m.s	perf. Criteria A
	MS	IEC 61000-4-8 IEC 61000-4-8	60 Hz; 100 A/m (see Fig. 6 for recommended circuit) 60 Hz; 300 A/m (see Fig. 6 for recommended circuit)	perf. Criteria A

NOT FOR NEW DESIGN

Downloaded from Arrow.com.

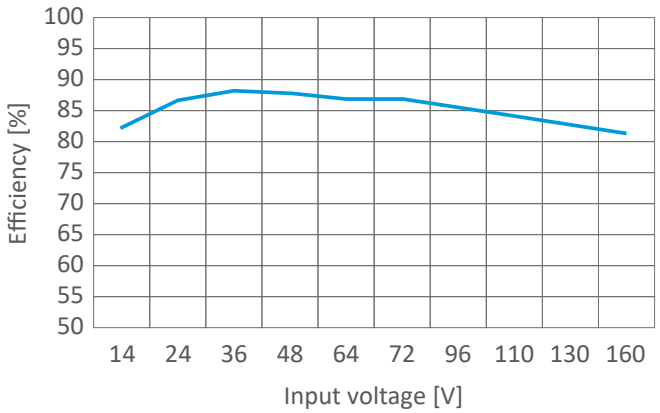

Figure 1. Efficiency vs. Input Voltage

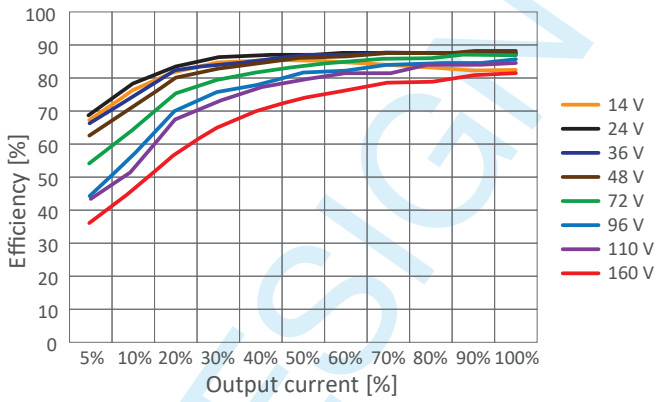

Figure 2. Efficiency vs. Output Load

9. DESIGN REFERENCE

9.1 RIPPLE & NOISE

All the DC-DC converters of this series are tested before delivery using the recommended circuit shown in Fig. 3.

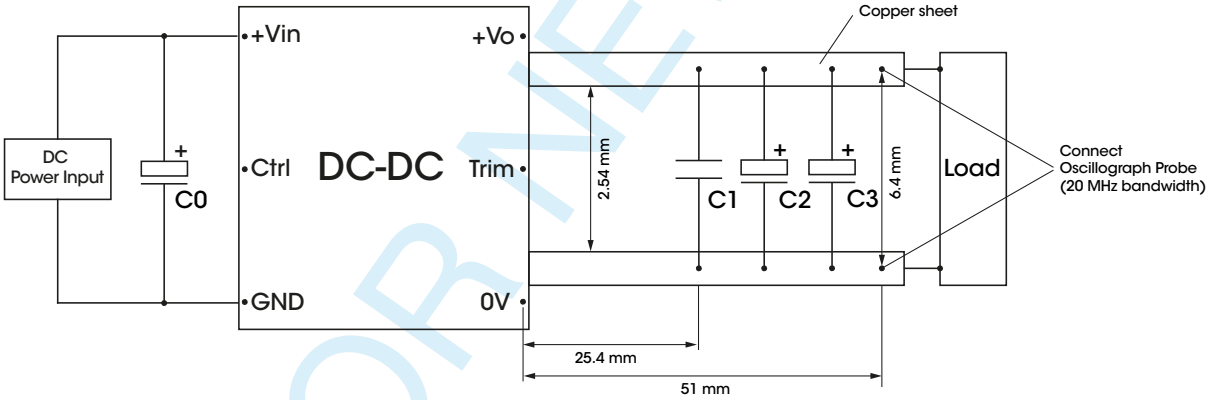

Figure 3. Recommended Test Circuit

	Capacitor value	C0 [µF]	C1 [µF]	C2 [µF]	C3[µF]
Output Voltage	3.3 / 5 VDC	100 Voltage ≥ 250 V	1 Voltage ≥ 1.2* Vo	10 Voltage ≥ 1.2* Vo	680 / ≥ 16 V
	12 VDC				330 / ≥ 25 V
	15 VDC				
	24 VDC				100 / ≥ 50 V
	28 VDC				
	48 VDC				82 / ≥ 63 V
	54 VDC				

NOT FOR NEW DESIGN

© 2024 Bel Fuse Inc.

Downloaded from Arrow.com.

9.2 TYPICAL APPLICATION

1. Please ensure that at least a 100 µF electrolytic capacitor is connected at the input in order to ensure adequate voltage surge suppression and protection.
2. Output ripple can be further reduced by appropriately increasing the output capacitor values C2/C3 and/or by selecting capacitors with a low ESR (equivalent series resistance). Also make sure that the capacitance is not exceeding the specified max. capacitive load value of the product.
3. Recommended circuit for Ctrl negative logic refer to Fig. 4.

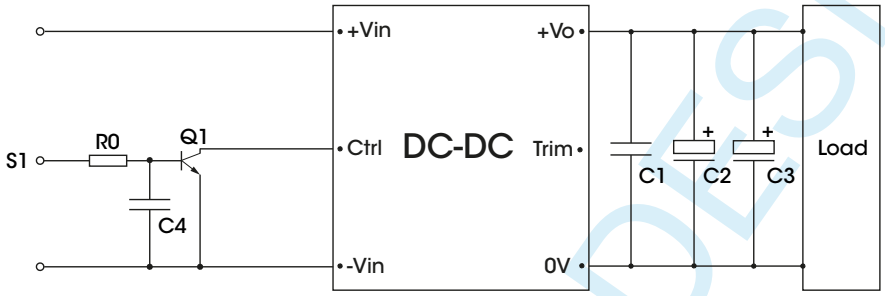

Figure 4. Recommended circuit for Ctrl negative logic

COMPONENTS	VALUE	RECOMMENDED COMPONENT
R0	10 kΩ	—
C4	0.1 µF	Voltage ≥ 25 V
Q1	Ic ≥ 10 mA	Voltage ≥ 30 V

9.3 TRIM FUNCTION FOR OUTPUT VOLTAGE ADJUSTMENT (open if unused)

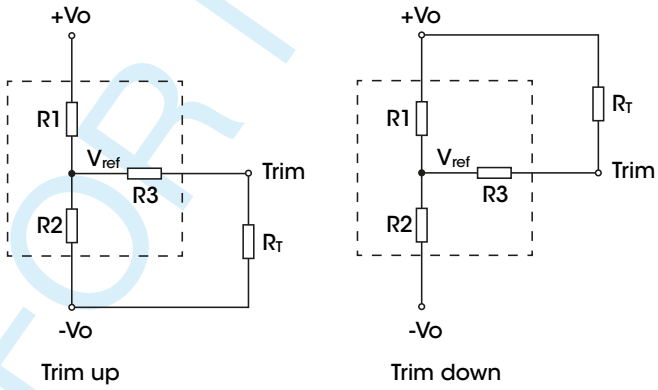

Figure 5. Trim resistor connection (dashed line shows internal resistor network)

Calculation formula of Trim resistance:

$$\text{Trim up: } R_T = \frac{a * R_2}{R_2 - a} - R_3 \qquad a = \frac{V_{ref} * R_1}{V_O - V_{ref}}$$

$$\text{Trim down: } R_T = \frac{b * R_1}{R_1 - b} - R_3 \qquad b = \frac{(V_O - V_{ref}) * R_2}{V_{ref}}$$

NOTES:

a, b : Self-defined parameter, round to the nearest hundredth
R_T [kΩ] : Resistance of Trim
V_O : Output voltage change
V_{ref} [VDC] : Reference voltage

NOT FOR NEW DESIGN

Downloaded from Arrow.com.

	Vo	3.3 V	5 V	12 V	15 V	24 V	28 V	48 V	54 V
Res	R1 [kΩ]	3.974	9.09	11.57	15.12	43.08	51	68.79	77.74
	R2 [kΩ]	2.4	3	3	3	5	5	3.75	3.75
	R3 [kΩ]	4	4	12.4	12.4	20	20	20	15.6
	V_{ref} [V]	1.24	1.24	2.5	2.5	2.5	2.5	2.5	2.5

9.4 EMC COMPLIANCE CIRCUIT

1. External circuit breaker and diode D1 form an anti-reverse circuit, and the diode withstand voltage requirement is above 250 V;
2. EMC Filter will be provided in a modular form, here is a recommended circuit and parameters, as shown in Fig. 6. Users can also build it themselves.

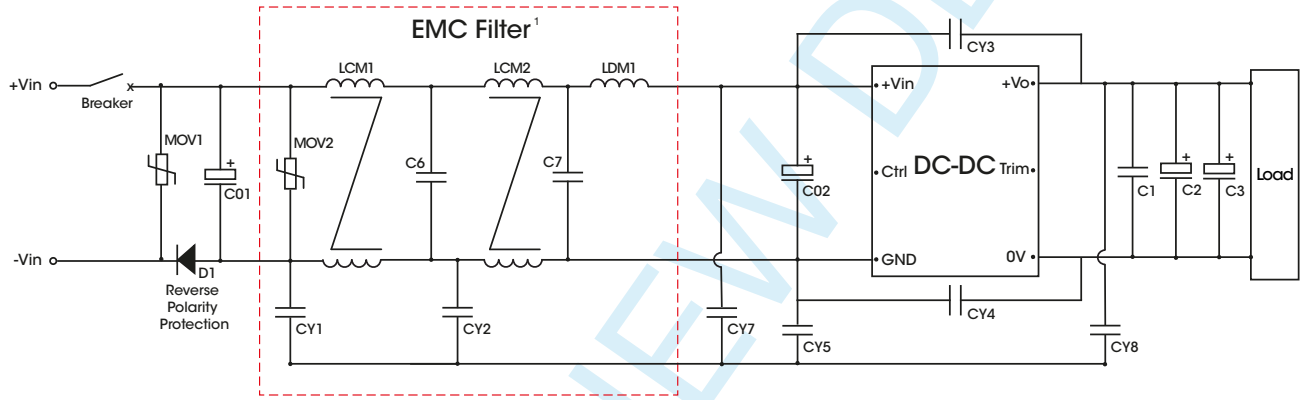

Figure 6. Recommended EMC Filtering

COMPONENTS	VALUE	RECOMMENDED COMPONENT
C6, C7	0.1 µF	CERAMIC; 0.1 µF; 10%; 630 V; X7R; 1812; -55 to +125°C
LDM1	4.7 µH	POWER CHOKE; 4.7 µH; 20%; 14 A; 30mOhm;-40 to +125°C
LCM1, LCM2	≥ 1.2 mH	COMMON MODE; TOROIDAL; FERRITE; THT; 1.2 mH; 2.5 A; 35 mOhm; -40 to +115°C
CY1, CY2, CY7, CY8,	1 nF	CERAMIC; X1/Y1; 1 nF; 10%; 400 V; PITCH 10 mm; -40 to+125°C
CY3, CY5	2.2 nF	CERAMIC; X1/Y1; 2.2 nF; 10%; 400 V; PITCH 10 mm; -40 to+125°C
CY4	4.7 nF	CERAMIC; Y1; 4.7 nF; 20%; 400 V; PITCH 10 mm; -40 to +125°C
D1	16 A	SCHOTTKY; DUAL; 600 V; 16 A; Vf 1.5 V; TO220; -55 to +150°C; COMMON CATHODE
MOV1	220 V / 58J	VDR; 220 V; 4 kA; 58 J; THT; PITCH 7.5 mm; -40 to +85°C
MOV2	220 V / 19 J	VDR; 220 V; 1.8 kA; 19 J; THT; PITCH 5 mm; -40 to +105°C
Fuse or Breaker [2]	6 A	Type C

[1] Use of EMC Filter Bel Power P/N: FRF30-00 is recommended.

[2] Type of fuse / circuit breaker to be selected according to the application requirements. The current rating shall be above the maximum working input current and below rated working current of reverse polarity diode.

© 2024 Bel Fuse Inc.

Downloaded from Arrow.com.

SURGE STANDARD	COMPONENTS	VALUE	RECOMMENDED COMPONENT
line to line ± 1 kV (42 Ω, 0.5 µF) line to line ± 1 kV (2 Ω, 18 µF)	C01	220 µF	ELECTROLYTIC; Al, WET; RADIAL; 220 µF; 20%; 250 V; Ø 16 x 20 mm; PITCH 7.5 mm; -40 to +105°C
	C02	220 µF	ELECTROLYTIC; Al, WET; RADIAL; 220 µF; 20%; 250 V; Ø 16 x 20 mm; PITCH 7.5 mm; -40 to +105°C
line to line ± 2 kV (2 Ω, 18 µF)	C01	330 µF	ELECTROLYTIC; Al, WET; RADIAL; 330 µF; 20%; 250 V; Ø 18 x 40 mm; PITCH 5 mm; -40 to +105°C
	C02	220 µF	ELECTROLYTIC; Al, WET; RADIAL; 220 µF; 20%; 250 V; Ø 16 x 20 mm; PITCH 7.5 mm; -40 to +105°C

11. MECHANICAL SPECIFICATIONS

11.1 MECHANICAL DIMENSIONS AND RECOMMENDED LAYOUT (STANDARD MODEL)

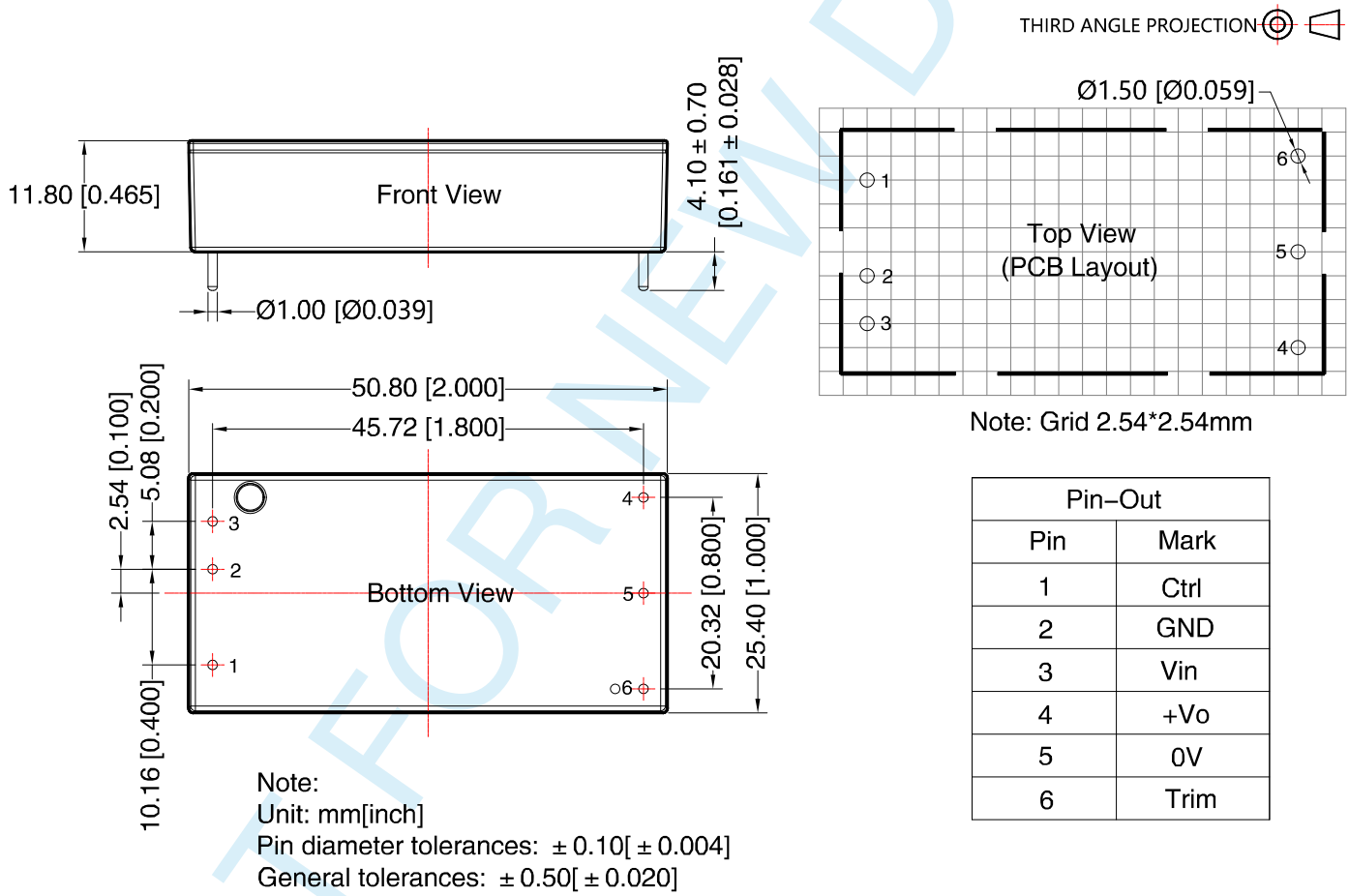

Pin–Out	
Pin	Mark
1	Ctrl
2	GND
3	Vin
4	+Vo
5	0V
6	Trim

Figure 7. Mechanical Drawing of Standard Model

NOT FOR NEW DESIGN

Downloaded from Arrow.com.

11.2 MECHANICAL DIMENSIONS AND RECOMMENDED LAYOUT (FLANGED BASEPLATE - SUFFIX F)

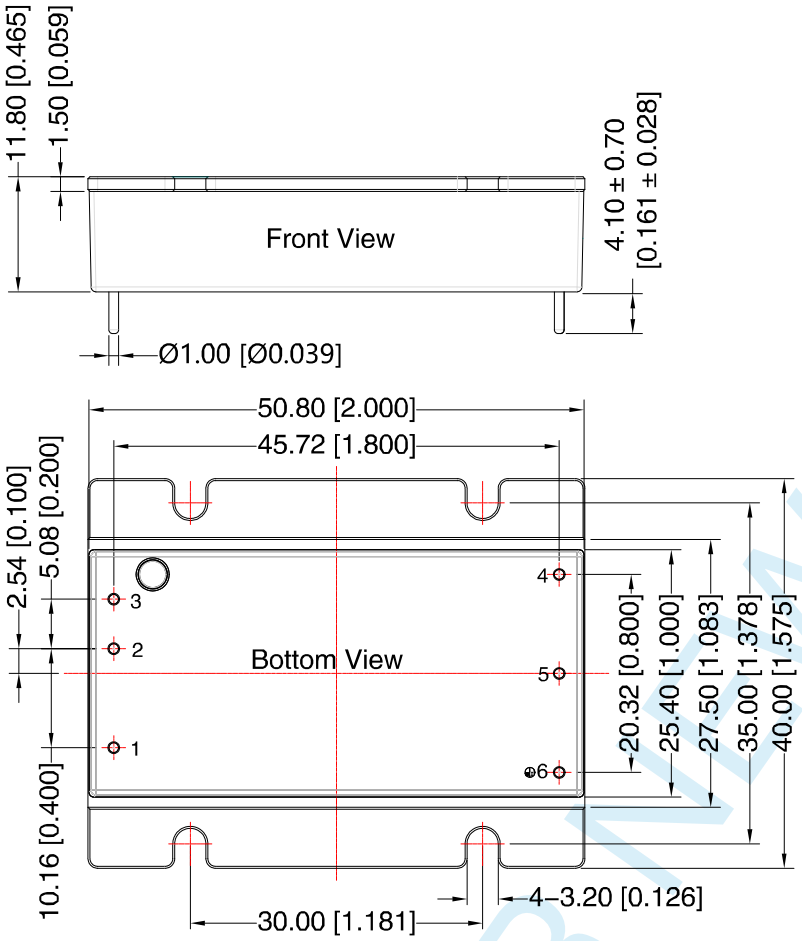

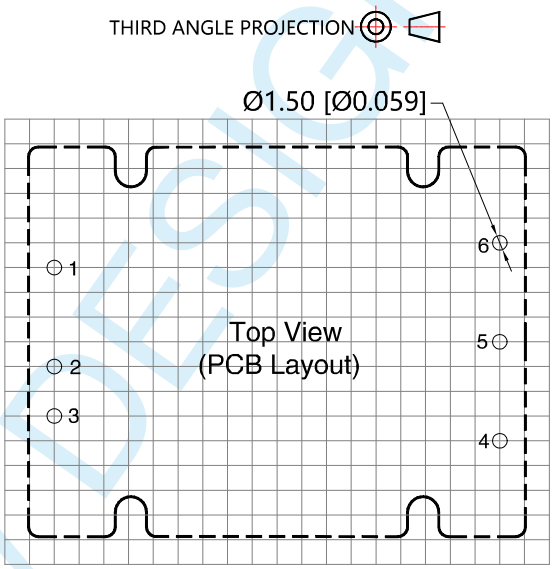

Note: Grid 2.54*2.54mm

Pin–Out	
Pin	Mark
1	Ctrl
2	GND
3	Vin
4	+Vo
5	0V
6	Trim

Note:
Unit: mm[inch]
Pin diameter tolerances: ± 0.10[± 0.004]
General tolerances: ± 0.50[± 0.020]

Figure 8. Mechanical Drawing of Model with Flanged Baseplate (Suffix F)

NOT FOR NEW DESIGN

© 2024 Bel Fuse Inc.

Downloaded from Arrow.com.

11.3 MECHANICAL DIMENSIONS AND RECOMMENDED LAYOUT (HEATSINK - SUFFIX C)

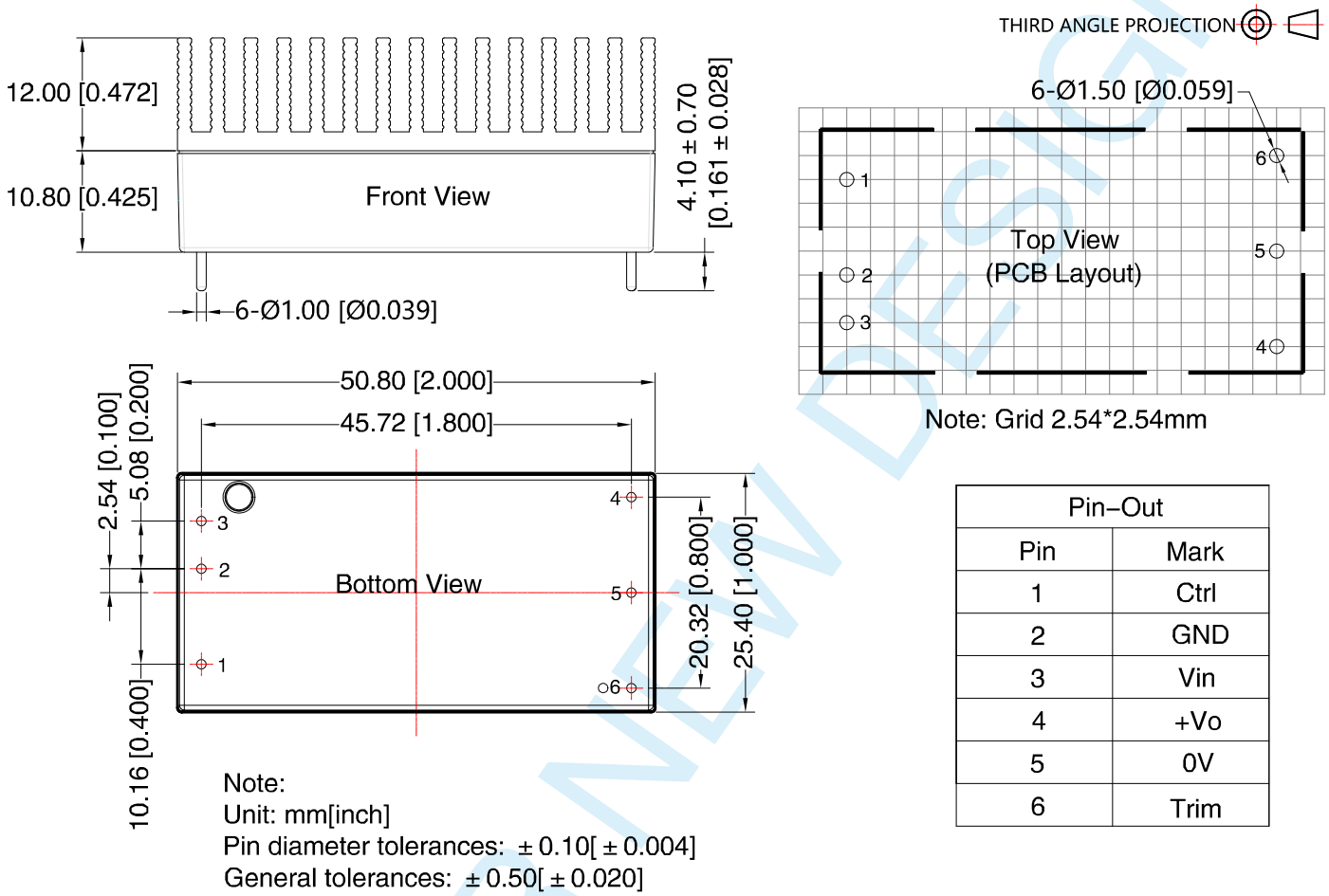

Pin–Out	
Pin	Mark
1	Ctrl
2	GND
3	Vin
4	+Vo
5	0V
6	Trim

Figure 9. Mechanical Drawing of Model with Heatsink (Suffix C)

NOT FOR NEW DESIGN

For more information on these products consult: tech.support@psbel.com

NUCLEAR AND MEDICAL APPLICATIONS - Products are not designed or intended for use as critical components in life support systems, equipment used in hazardous environments, or nuclear control systems.

TECHNICAL REVISIONS - The appearance of products, including safety agency certifications pictured on labels, may change depending on the date manufactured. Specifications are subject to change without notice.

Downloaded from Arrow.com.